JRH Industrial Gear Units Selection Manual

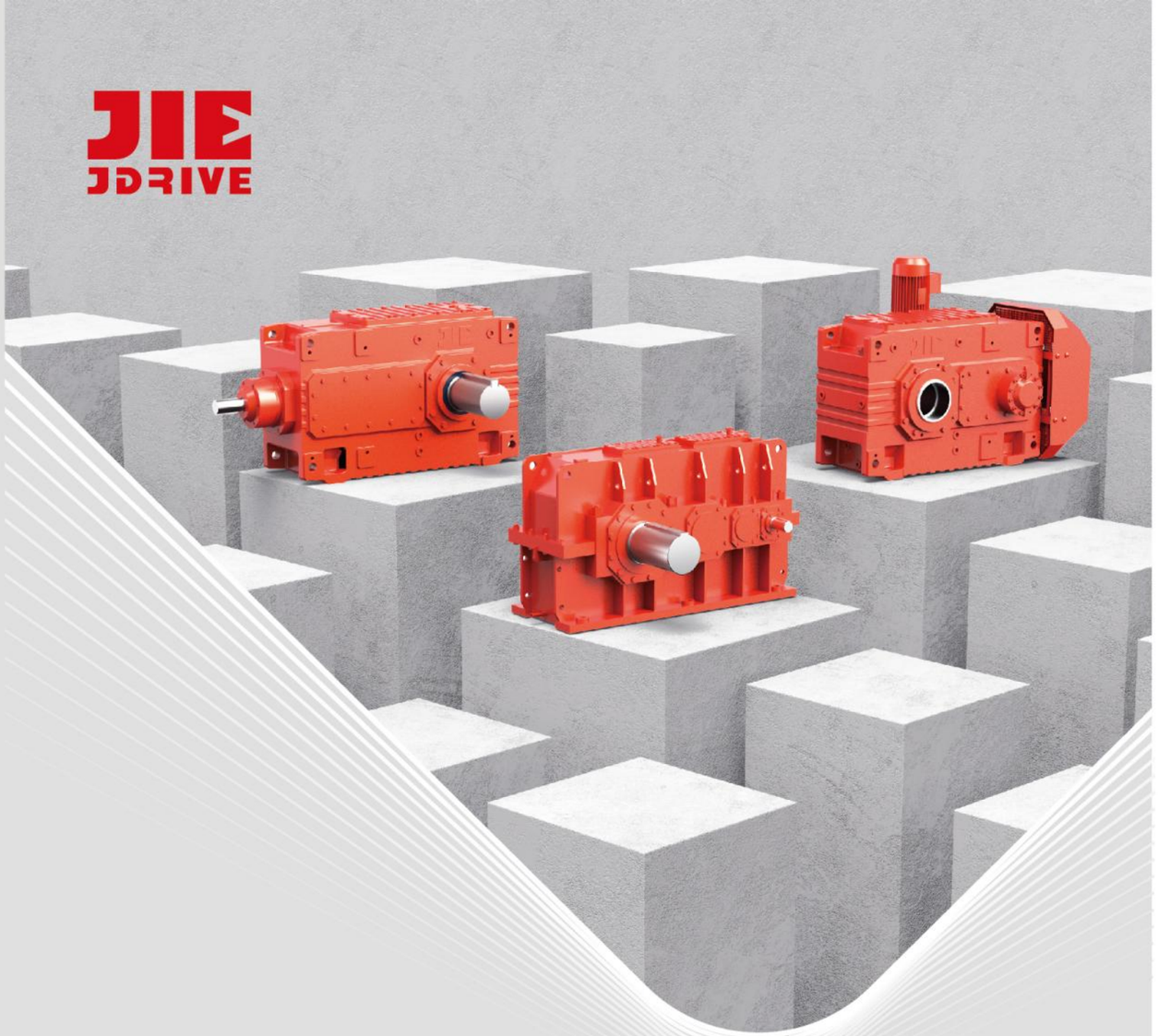

JRH Industrial Gear Units

JIE Total Drive Solutions Provider

www.jie-drives.com

JIE JDRIVE

No.1, JIE Road, Hangzhou,
Zhejiang, China
Tel.: +86 571 8299 1111
E-mail: jie@jie.com.cn
Web.: www.jiedrive.com

JIE USA

279 Madsen Drive Ste 101
Bloomingdale IL 60108
Tel.: +1 630 580 9986
E-mail: info@jie-drives.com
Web: www.jie-drives.com

JIE CANADA

130 Rue de l'Émissaire Drummondville,
Québec J2E 1S4 Canada
Tel.: +1 819 850 9886
E-mail: info@jie-drives.com
Web.: www.jie-drives.com

JIE EURONORM

Hub van Doorneweg 8, 2171 KZ
Sassenheim, Netherlands
Tel.: +31 252 228 850
E-mail: info@jie-euronorm.com
Web.: www.jie-euronorm.com

JIEB·05C-01·2024A·0100

JIE INTELLIGENT DRIVE SOLUTIONS PROVIDER











CONTENTS

P6-7	Selection Guide
P8	Product Pictures
P9-12	Product Description
P13	Model Description
P14-23	Selection Description
P24-37	Technical Specifications
P38-105	Product Dimension
P106-107	Product Ratio
P108	Product Layout Form
P109-117	Lubrication
P118	Explosion Protection
P119	Product Accessories
P121-128	JIE Drive Product Catalogue

1. Selection Guide






1 **Select JIE Drive product**
Example: Pick the right model JRHH parallel shaft gear units, JRHB bevel helical gear units.

2 **Enter current product brand**
Example: JIE Drive or competitors.

3 **Enter current product specifications**
Example: JRH Intelligent industrial gear units, size 3~28, ratio 1.25~450, input power 4.3~10515kW, output torque 2300~1400000Nm and other specifications.

4 **Generate JIE Drive model and specifications**
Example: JRHH3SH9-31.5-A-01-79-82, JRHB4SH9-140-A-00 and other models.

5 **Generate 2D/3D drawings of JIE Drive products**
Example: 2D/3D drawings of JRHH3SH8-50-B-00, JRHB3SH8-50-B-00, JRHH3HH8-50-A-00, JRHB3HH8-50-B-00 and other models.

6 **Confirm the technical quality standard**
Example: The technical and quality standards shall be implemented according to the relevant standards of JIE Drive and the standards agreed by both parties. The warranty period shall be 12 months after start using products or 18 months after shipment from JIE whichever comes earlier.

7 **Confirm delivery standard**
Example: Delivery shall be made according to the time agreed by both parties for the first cooperation; 2 weeks lead time base on 1+3 rolling plan, including total usage, annual usage, monthly usage, batch usage and sample; confirmation of pre-sales service, in-sales service, after-sales service and pre-order management.

8 **Confirm the settlement price standard**
Example: The order comes into effective after 30% deposition received and products will be delivered after balance payment; price shall be subject to agreed upon both parties.

9 **Confirm order information**
Example: Confirm product type, model, specification, order quantity, color, packaging, transportation, P.O issue time, delivery time, delivery location, receiving company and other order information.

10 **Confirm product delivery information**
Example: Confirm prototype delivery, small batch delivery, batch delivery and other delivery information.




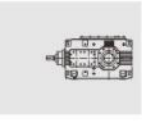

5. Generate 2D/3D drawing of JIE products

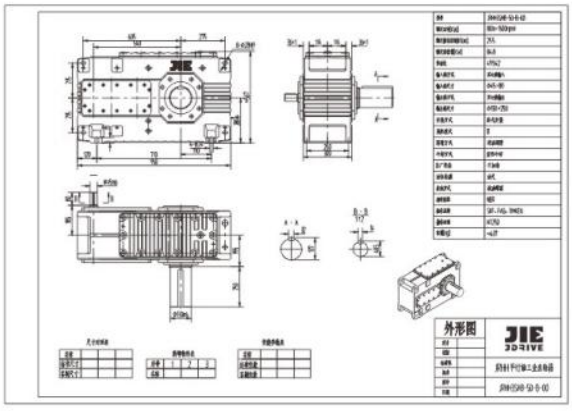

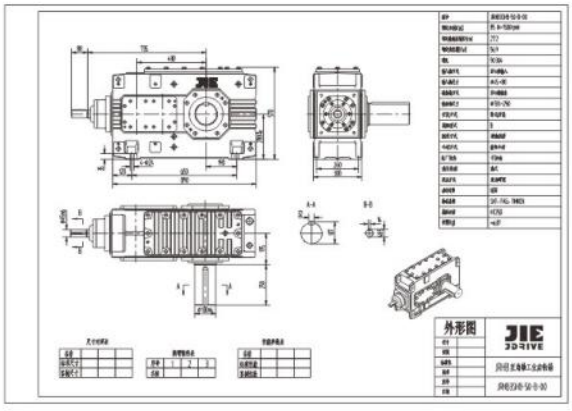

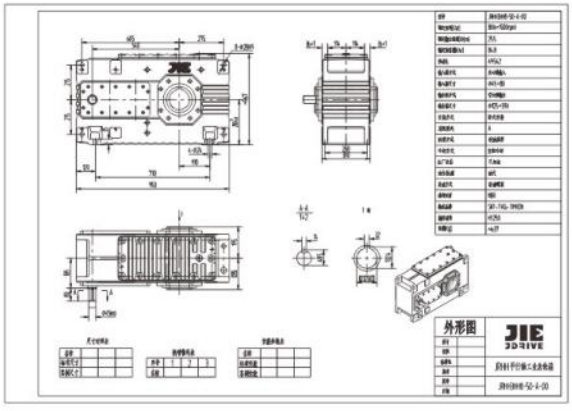

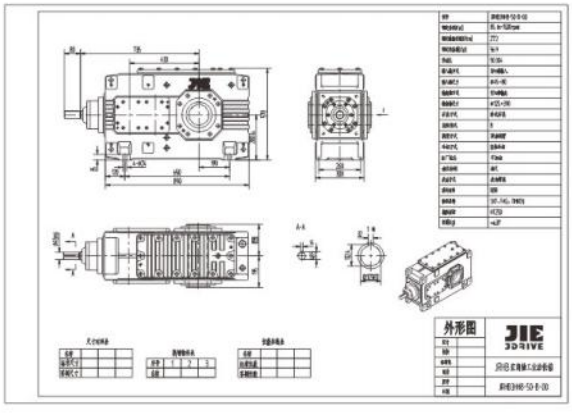

2. Product Pictures

JRHH. . SH

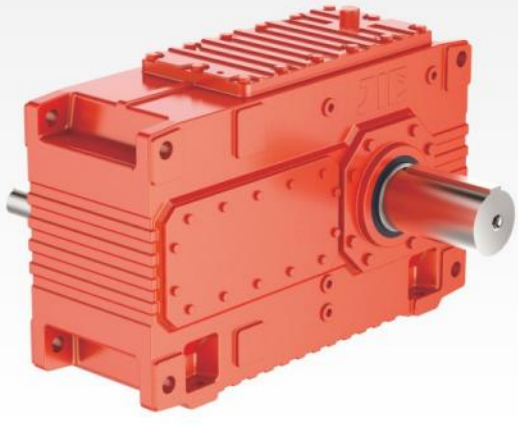

JRHB. . SH

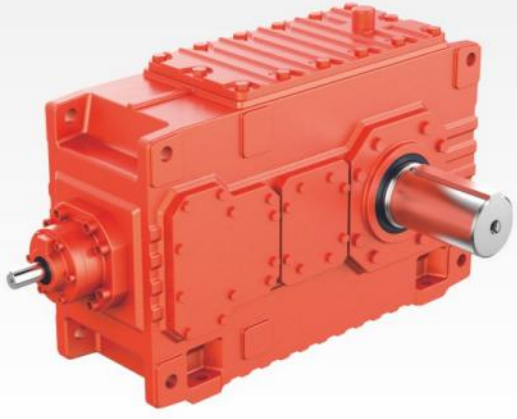

JRHH. . HH

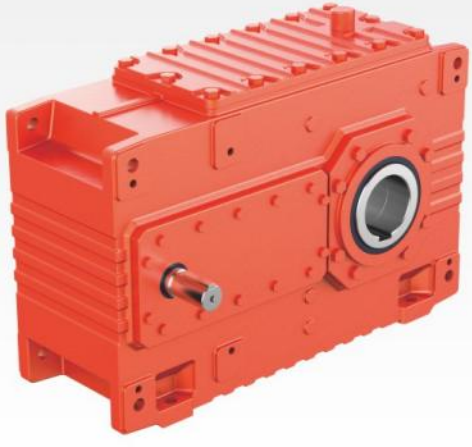

JRHB. . HH

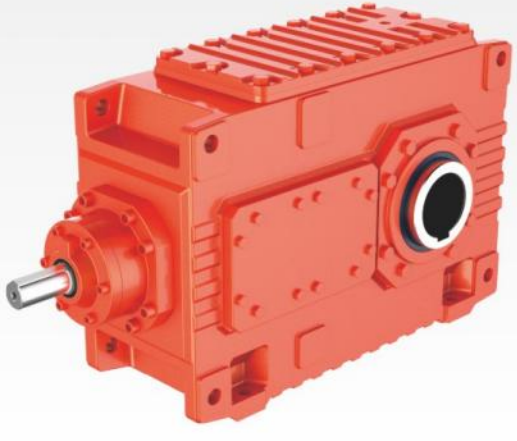

3. Product Description









JRH intelligent industrial gear units has a long service life, low noise, no oil leakage, lightweight and able to attach intelligent monitoring systems to perform preventive maintenance. The range includes JRHH parallel shaft gear units, JRHB bevel helical gear units and other customer specific types of gear units.

JRH intelligent industrial gear units promotes lean production, builds intelligent factories, and realizes the integration of research, production, supply, marketing and service, so as to meet customers' demand for rapid response through complete product planning and design such as “core product-extreme technology, peripheral product-extreme service, external product-extreme experience” and the implementation of the optimal plan of lean production in the whole value chain such as “product planning, design validation, processing test, assembly test, warehouse logistics, sales service, information system, HR, operation plan, strategy planning”.

JRH intelligent industrial gear units has a modular and optimized design. The whole-series product comprises single solid shaft input, double solid shaft input, IEC motor input, single solid shaft output, double solid shaft output, hollow shaft output, hollow shaft with shrink disc output, horizontal installation, vertical installation, torque arm installation, and other input interfaces, output modules and installation types. This product supports the modular combination and integration of multi-stage gearbox with different types adapters, with standard painting color RAL7031 & packed based on order by recyclable materials. And available for customized base on customer requirement.

JIE is committed to providing great products for great partners across the world, JIE Intelligent Drive Solutions Provider.

1. Product Characteristics









Design

JRH Intelligent Industrial Gear Units adapt new design, the distinctive innovation is:

- Less parts type, more specification and models
- Higher reliability, bigger power rate
- Adapt outstanding non–contact anti–friction labyrinth type seal;
- Provide flange type output shaft, to match the installation requirement in the small space (according the requirement of customer)

Provide other installation type according the requirement of customer.

Provide the standard specification of flange、housing swing base and torque arm.

Noise identify

New design idea and improve the noise indentify through following solution:

- Bevel gear grinding technics;
- MASAK computer software , to design the housing with the function of absorb the noise;
- Adapt the extra large engagement factor of gear;

Housing thermolysis

JIE gear box have not only the high efficiency but also the good thermolysis performance:

- Increase the surface of housing;
- Non–contact labyrinth type seal ;
- Adapt the big fan and new fan cover with flow deflector;
- According the lower and maximum allowable oil temperature to select the JIE gear box to increase the reliability by long oil exchanging period and reduce the maintenance cost.

2. General Information






Attention

- Illustrations are examples only and not strictly binding.Dimensions are subject to change.
- The weights are mean values and not strictly binding.
- To prevent accidents,all rotating parts should be guarded according to local and national safety regulations.
- Prior to commissioning,the operating instructions must be observed.The gear units are delivered ready for operation but without oil filling.
- Oil quantities given are guide values only.The exact quantity of oil depends on the marks on the oil dipstick.
- The oil viscosity has to correspond to the data given on the name plate.
- The gear units are supplied with radial shaft seals.Other sealing variants on request.
- Directions of rotation referring to output shaft d_2.

Explanation of symbols used in the dimensioned drawings

 =Oil dipstick

 =Breather

 =Oil drain

 =Oil filler

3. Summary of Basic Types

Horizontal mounting position

Helical gear units

Type JRHH1..,JRHH2..,JRHH3..,JRHH4..1-4stage,i_N=1.25-450

JRHH.SH

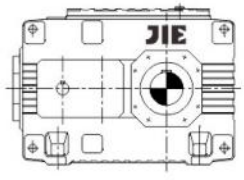

JRHH.HH

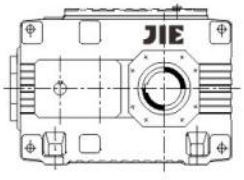

JRHH.DH

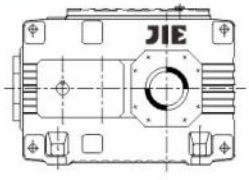

JRHH.HM,JRHH.DM

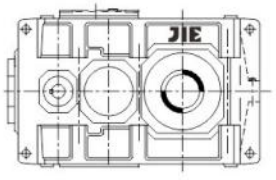

Bevel-helical gear units

Type JRHB2..,JRHB3..,JRHB4..

2-4stage,i_N=5-400

JRHB.SH

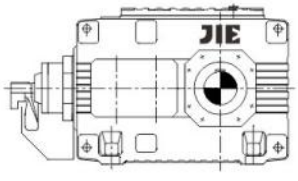

JRHB.HH

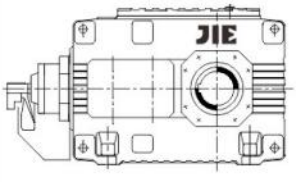

JRHB.DH

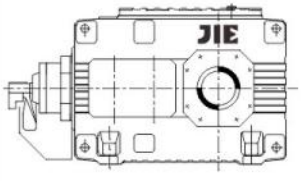

JRHB.HM,JRHB.DM

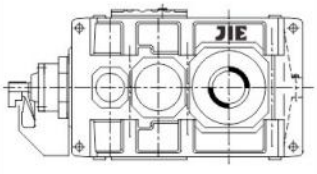

Vertical mounting position

Helical gear units

Type JRHH2.V,JRHH3.V,JRHH4.V

2-4stage,i_N=6.3-450

JRHH.SV

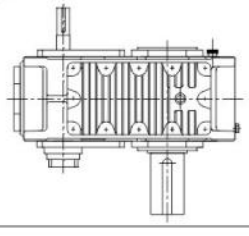

JRHH.HV

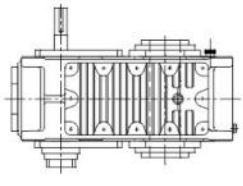

JRHH.DV

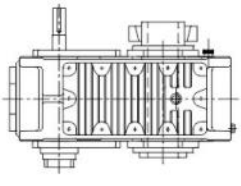

Bevel-helical gear units

Type JRHB2.V,JRHB3.V,JRHB4.V

2-4stage,i_N=5-400

JRHB.SV

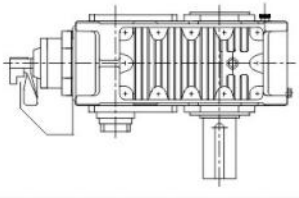

JRHB.HV

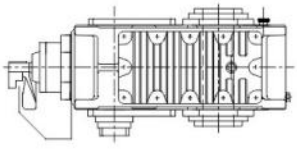

JRHB.DV

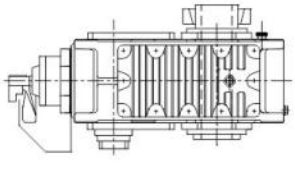

4. Model Description






J	RH	H	3	S	H	8	–	50	–	A	–	00
1	2	3	4	5	6	7		8		9		10

1 Enterprise code

J-JIE Drive

2 Product code

RH- industrial gear units

3 Type

H- parallel shaft industrial gear units
B- direct axle industrial gear units

4 No.of stages

1，2，3，4

5 Output shaft design

S-Solid shaft
H-Hollow shaft
D-Hollow shaft for shrink disk
K-Hollow shaft with involute splines acc.
To Din 5480(on request)
F-Flanged shaft(on request)
V-Shaft d2 reinforced(on request)

6 Mounting

H–Horizontal
M–Horizontal design
Without feet
V–Vertical

7 Size

3…28

8 ratio

See pages 106-107

9 Assemblies

See Page 108

10 Add-on Pieces

See Page 119

Example JRHH3SH8–50–A–00

JIE series products,helical gear units,3-stage,size 8,solid output shaft design,horizontal mouting position,i=50, design A,no add-on pieces.

5. Selection Description

Selection Table of JIE JRH Products

Conditions of use:

Application industry: Equipment name:
Ambient temperature: Ambient humidity:
Altitude: Site of use: ☐indoor ☐outdoor
Start-stop frequency: Running time:
Load time: ☐15% ☐25% ☐40% ☐60% ☐100%
Current brand: Current model:
Existing problem: Items needing improvement:

Product information:

Package identification:
Packaging material: ☐Wooden case ☐ Wooden pallet Case mark: ☐Chinese ☐English
Relevant data: ☐Certificate of conformity ☐Ex-factory inspection report ☐ Chinese instruction
☐ English instruction
List of accessories: ☐Torque arm ☐Backstop ☐None
Appearance:
Paint color: ☐JMR-01 ☐JMG-01 ☐JGB-01 ☐RAL2002 ☐RAL5015 ☐RAL9003 ☐RAL7045 ☐RAL7031
Anti-corrosive grade: : ☐Standard ☐JS1 ☐JS2 ☐JS3 ☐JS4
Nameplate requirement: ☐Chinese ☐English
Installation:
Product type:☐JRHH ☐JRHB
Type of installation: ☐ Horizontal installation with foot ☐ Horizontal installation without foot
☐ Vertical installation
Layout form:☐A ☐B ☐C ☐D ☐E ☐F ☐G ☐H ☐I (see attached figure)
Output shaft form: ☐Solid shaft ☐Hollow shaft with single key ☐Hollow shaft with shrink disc
Output shaft rotation: ☐Clockwise ☐Counterclockwise ☐Two-direction
Performance:
Working speed: n2= Working shaft power (kW) : P = Working torque: (Nm) T= Service factor:f=
Lubrication: ☐Splash lubrication ☐Oil expansion tank immersion lubrication ☐Axial end pump forced lubrication
☐ Electric pump forced lubrication
Cooling mode: ☐ Fan ☐ Cooling coil ☐ Air cooler system ☐ Plate water cooler system
Whether there is axial bearing radial force: ☐ Yes ☐ No Radial force:
Whether the output shaft withstands radial force: ☐ Yes ☐ No Radial force:
Whether the outlet shaft withstands axial force: ☐ Yes ☐ No Axial force:

Type of motor: ☐Standard motor ☐Frequency conversion motor ☐Explosion-proof motor ☐Roller motor
☐Lifting motor ☐Servo motor
Pole number: ☐2 ☐4 ☐6 ☐8 Motor power: kW
Rated voltage: ☐220/380V ☐380/660V Motor fundamental frequency: ☐50Hz ☐60Hz ☐87Hz
Insulation grade: ☐F ☐H Protection grade: ☐IP54 ☐IP55
Working system: ☐S1 ☐S3-40% Cooling mode: ☐IC410 ☐IC411 ☐IC416
Energy efficiency class: ☐ IE3 ☐ IE4 Direction of rotation: ☐Clockwise ☐Counter clockwise
Braking voltage: ☐DC 24V ☐AC 220V ☐AC 380V
Release device: ☐ Handle release HR ☐ Screw release HF ☐ None Brake response: ☐ Ordinary ☐ Fast
Fan voltage: ☐DC 24V ☐AC 220V (1～) ☐AC 220V (1～) ☐AC 380V (3～)



Fan frequency: ☐50Hz ☐60Hz
Angle between release device and terminal box (clockwise from the end of shaft extension) : ☐0°☐90°☐180° ☐270° (see attached figure)
Product model:



Customized information:
Packaging:
Appearance:
Installation dimension:
Performance indicators:
After-sales service:



Service information
Pre-sales service:
Training consulting: ☐ Type selection training ☐ Application training ☐ Use and maintenance
Design selection: ☐ Participate in design ☐ Design verification ☐ Product selection
Demand confirmation: ☐ Working condition confirmation ☐ Product confirmation ☐ Service confirmation
In-sales service: ☐ On-site full inspection ☐ Process sampling ☐ Ex-factory inspection
After-sales service: ☐ Installation and commissioning☐ Testing and maintenance ☐ Spare parts



Business information:
Transportation:
Delivery place:
Delivery time:
Order quantity:
Settlement price:

Attached figure:

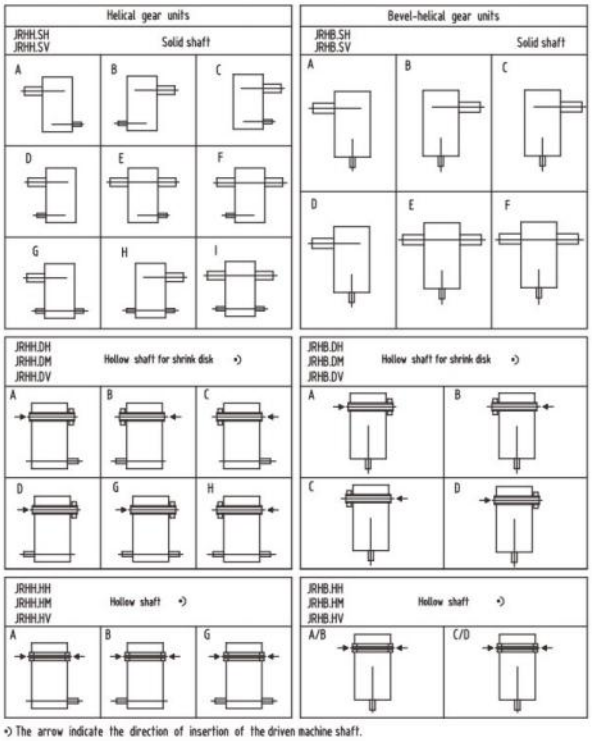

•) The arrow indicate the direction of insertion of the driven machine shaft.

2. Key to Symbols






Key to symbols

E_D=Operating cycle per hour in % e.g.E_D=60%/h

f_1=Factor for driven machine(table1),page 21

f_2=Factor for prime mover(table3),page 22

f_3=Peak torque factor(table3),page 22

$f_{4,5}$=Thermal factors(table4,5),page 22

$f_{6,7}$=Altitude factor(table6,7), page 22

f_8=Oil supply factor for vertical gear units (table 8),page 23 For horizontal gear units:f_8=1

f_9、f_{10}、f_{11}、f_{12}= Thermal capacity (table 9、10、11、12) page 23

i=Actual ratio

i_N=Nominal ratio

i_s=Required ratio

n_1=Input speed(r/min)

n_2=Output speed(r/min)

P_G=Required thermal capacity

P_{G1}=Thermal capacity for gear units without auxiliary cooling,pages 25-33

P_{G2}=Thermal capacity for gear units with fan cooling,pages 25-33

P_{G3}=Thermal capacity for gear units with built-in cooling coil,pages 25-33

P_{G4}=Thermal capacity for gear units with built-in cooling coil and fan,pages 25-33

P_N=Nominal power rating of gear unit(kW),see rating tables,pages 24-32

P_2=Power rating of driven machine(kW)

t=Ambient temperature(℃)

T_A=Max.torque occurring on input shatf,e.g.peak operating-,starting-or braking torque(Nm)

T_{2N}=Nominal output torque(kNm),pages 34-35






3. Guidelines for the Selection

Steps	Specification	Symbol	Calculate parameter	
1	Factor for driven machine	f_1	See P 21 f_1 table	
2	Factor for prime mover	f_2	See P 22 f_2 table	
3	Permissible input speed	n_1	≤1500r/min	
4	Position of input and output	JRHH JRHB	JRHH:Parallel shaft,JRHB:Right-angled shaft	
5	Determine ratio	i	$i=n_1/n_2$	
6	Efficiency	η	sigle stage:98% 2-stage:96% 3-stage:94% 4-stage:92%	
7	Determine nominal power	P_N	$P_N \geqslant P_2 \cdot f_1 \cdot f_2/\eta$	
8	Determine output mode		Output mode and mounting position	
9	Check for peak torque	T_A	$P_N \geqslant T_A \cdot n_1 \cdot f_3/9550$	
10	Check for forces on output shaft	F_{R2}		
11	Determination of oil supply		Horizontal	Vertical
			Possible oil supply variations: All parts to be lubricated are lying in the oil or aresplash lubricated Forced lubrication on request.	Possible oil supply variations: - Dip lubrication -Forced lubrication by means of flanged-on pump or motor pump
12	Cooling method		1.Adequate for gear units without auxiliary cooling,if:P2≤PG1Xf4Xf6Xf8Xf9 2.Adequate for gear units with fan cooling,if:P2≤PG2Xf4Xf6Xf8Xf10 3.Adequate for gear units with fitted cooling coil,if:P2≤PG3Xf5Xf7Xf8Xf11 4.Adequate for gear units with cooling coil and fan,if:P2≤PG4Xf5Xf7Xf8Xf12 5.For higher thermal capacities,cooling by external oil cooler on request.	

*Peak torque:Maximum torque is maximum starting torque,maximum braking torque.

4. Selection example






Known criteria

Prime mover:

P_1=75kW

n_1=1500r/min

T_A=720Nm

Driven machine(belt conveyor)

P_2=57kW

n_2=26r/min

service duration:8h/day

Starts per hour:10times/hour

Working circle E_D=100%per hour

Ambient temperature:30℃

installed in open field

Altitude:600m

Right-angled shaft

Mounting mode:Horizontal

Output shaft:solid shaft

Shaft amangement:C

No pieces

Selecting steps:

1.Calculate ratio

$i=n_1/n_2=1500/26=57.7$ $i_N=56$

2.Determine nominal power rating

$P_N \geqslant P_2 \cdot f_1 \cdot f_2/\eta$

$=57X1.3X1/0.94=78.8kW$

Selected from power rating table:JRHB3SH9,

with P_N=100kW

3.Verify peak torque

$P_N \geqslant T_A \cdot n_1 \cdot f_3/9550$

$=720X15000X0.65/9550=73.5kW$

P_N=100kW>73.5kW Meet requirement

4.Verify thermal capacity

$P_{G1}Xf_4Xf_6Xf_8Xf_9$

=64.8X0.87X1X1X1.14

=64.3kW

P_2=57kW<64.3kW

So auxiliary cooling devece is unnecessary

Model:JRHB3SH9-56-C-00

5. Service Factors






Table 1 — Factor for driven machine — f_1

Driven machines	Effective daily operating period under load in hours			Driven machines	Effective daily operating period under load in hours		
	0.5	>0.5-10	>10		0.5	>0.5-10	>10
Waste water treatment				**Conveyors**			
Thickeners(central drive)	-	-	1.2	Bucket conveyors	-	1.5	1.8
Filter presses	1.0	1.3	1.5	Hauling winches	1.4	1.6	1.8
Flocculation apparata	0.8	1.0	1.3	Hoists	-	1.5	1.8
Aerators	-	1.8	2.0	Belt conveyors 150kW	1.0	1.3	1.5
Raking equipment	1.0	1.2	1.3	Belt conveyors 150kW	1.1	1.3	1.6
Combined longitudinal and rotary rakes	1.0	1.3	1.5	Goods lifts	-	1.2	1.5
Pre-thickeners	-	1.1	1.3	Passenger lifts	-	1.5	1.8
Screw pumps	-	1.4	1.6	Apron conveyors	-	1.3	1.6
Wate turbines	-	-	2.0	Escalators	1.0	1.2	1.4
Pumps				Rail traveling gears	-	1.6	-
Centrifugal pumps	1.1	1.3	1.5	**Frequency converters**	-	1.8	2.0
Positive-displacement pumps							
1 piston	1.3	1.4	1.8	**Reciprocating compressors**	-	1.8	1.9
>1 piston	1.2	1.4	1.5				
Dredgers				**Cranes**			
Bucket conveyors	-	1.6	1.8	Slewing gears	1.0	1.4	1.8
Carterpillar travelling gears	1.2	1.6	1.8	Luffing gears	1.0	1.1	1.4
Bucket wheel excavators				Travelling gears	1.1	1.6	2.0
as pick-up	-	1.7	1.7	Hoisting gears	1.0	1.2	1.5
for primitive material	-	2.2	2.2	Derricking jib cranes	1.0	1.2	1.6
Cutter heads	-	2.2	2.2	**Cooling towers**			
Slewing gears*	-	1.4	1.8	Cooling tower fans	-	-	2.0
Plate bending machines*	-	1.0	1.0	Blowers(axial and radial)	-	1.4	1.6
Chemical industry				**Food industry**			
Extruders	-	-	1.6	**Cane sugar production**			
Dough mills	-	1.8	1.8	Cane knives	-	-	1.7
Rubber calenders	-	1.5	1.5	Cane mills	-	-	1.7
Cooling drums	-	1.3	1.4	**Beet sugar production**			
Mixers for				Beet cossettes macerators,	-	-	1.2
uniform media	1.0	1.3	1.5	Extraction plants,Mechanical refrigerators,Juice boilers,	-	-	1.4
non-uniform media	1.4	1.6	1.7	Sugar beet washing machines,			
Agitators for media with				Sugar beet cutters	-	-	1.5
uniform density	1.0	1.3	1.5	**Paper machines**			
non-uniform density	1.2	1.5	1.7	of all kind	-	1.8	2.0
non-uniform gas absorption	1.4	1.6	1.8	Pulper drives	On request		
Toasters	1.0	1.3	1.5	**Centrifugal compressors**	-	1.4	1.5
Centrifuges	1.0	1.2	1.3				
Metal working mills				**Cableways**			
Plate tilters	1.0	1.0	1.2	Material ropeways	-	1.3	1.4
Ingot pushers	1.0	1.2	1.2	To-and fro system			
Winding machines	-	1.6	1.6	aerial ropeways	-	1.6	1.8
Cooling bed transfer frames	-	1.5	1.5	T-bar lifts	-	1.3	1.4
Roller straighteners	-	1.6	1.6	Continuous ropeways	-	1.4	1.6
Roller tables				**Cement industry**			
continuous	-	1.5	1.5	Concrete mixers	-	1.5	1.5
intermittent	-	2.0	2.0	Breakers	-	1.2	1.4
Reversing tube mills	-	1.8	1.8	Rotary kilns	-	-	2.0
Shears				Tube mills	-	-	2.0
continuous	-	1.5	1.5	Separators	-	1.6	1.6
crank type	1.0	1.0	1.0	Roll crushers	-	-	2.0
Continuous casting drivers	-	1.4	1.4				
Rolls							
Reversing blooming mills	-	2.5	2.5				
Reversing slabbing mills	-	2.5	2.5				
Reversing wire mills	-	1.8	1.8				
Reversing sheet mills	-	2.0	2.0				
Reversing plate mills	-	1.8	1.8				
Roll adjustment drives	0.9	1.0	-				

1.Design for power rating of driven machine P_2
*)Designed power corresponding to max.torque
**)Load can be exactly classified.
***)A check for thermal capacity is absolutely essential
2.The listed factors are empirical values.Prerequisite for their application is that the machinery and equipment mentioned correspond to generally accepted design and load specifications.In case of deviations from standard conditions,please refer to JIE.
3.For driven machines which are not listed in this table,please refer to JIE.

Table2 Factor for prime mover	f_2
Electric motors,hydraulic motors,turbines	1.0
Piston engines 4-6 cylinders, cyclic variation 1:100to 1:200	1.25
Piston engines 1-3 cylinders, cyclic variation up to 1:100	1.5

Table3 Peak torque factor				f_3
	Load peaks per hour			
	1-5	6-30	31-100	>100
f_3 Steady direction of load	0.5	0.65	0.7	0.85
f_3 Altemating direction of load	0.7	0.95	1.10	1.25

Table4 Thermal factor					f_4
Gear units without auxiliary cooling or with fan					
Ambient	Operating cycle per hour(E_D)in%				
	100	80	60	40	20
10℃	1.14	1.20	1.32	1.54	2.04
20℃	1.00	1.06	1.16	1.35	1.79
30℃	0.87	0.93	1.00	1.18	1.56
40℃	0.71	0.75	0.82	0.96	1.27
50℃	0.55	0.58	0.64	0.74	0.98

Table5 Thermal factor					f_5
For cooling with cooling coil,or with fan and cooling coil					
Ambient	Operating cycle per hour(E_D)in%				
	100	80	60	40	20
10℃	1.04	1.10	1.21	1.40	1.86
20℃	1.00	1.06	1.16	1.35	1.79
30℃	0.93	0.99	1.08	1.26	1.66
40℃	0.88	0.93	1.02	1.19	1.58
50℃	0.81	0.86	0.94	1.09	1.45

Table6 Factor for altitude					f_6
Gear units without auxiliary cooling or with fan					
Factor	Altitude(metres above MSL)				
	up to 1000	up to 2000	up to 3000	up to 4000	up to 5000
f_6	1.0	0.95	0.90	0.85	0.80

Table7 Factor for altitude					f_7
For cooling with cooling coil,or with fan and cooling coil					
Factor	Altitude(metres above MSL)				
	up to 1000	up to 2000	up to 3000	up to 4000	up to 5000
f_7	1.0	0.98	0.96	0.94	0.92






Table8	Oil supply factor for vertical gear units.For horizontal gear units f_8=1.0,and in case of forced lubrication f_8=1.05									f_8
Gear unit type	Oil supply	Sizes 4....12				Sizes 13....18				
		without Auxilliary cooling	with Fan	with Cooling coil	with Fan and cooling coil	without Auxilliary cooling	with Fan	with Cooling coil	with Fan and cooling coil	
JRHH2.V JRHH3.V JRHH4.V	Dip lubrication	0.95	****	0.95	****	****	****	****	****	
	Forced lubrication	1.15	****	1.05	****	1.15	****	1.05	****	
JRHB2.V JRHB3.V JRHB4.V	Dip lubrication	0.95	0.95	0.95	0.95	****	****	****	****	
	Forced lubrication	1.15	1.10	1.10	1.10	1.15	1.10	1.10	1.10	

Table9	Thermal capacity factor for gear units without autiliary cooling													f_9
Gear unit type	n r/min	Ratio i	Small confined spaces				Large halls workshops				In the open			
			3...6	7...12	13...18	19...28	3...6	7...12	13...18	19...28	3...6	7...12	13...18	19...28
JRHH1SH	750	1.25..2 2.24..5.6	0.54 0.60	0.51 0.58	- 0.55	- 0.50	0.69 0.73	0.66 0.71	- 0.68	- 0.67	0.9 0.9	0.9 0.9	0.9 0.9	- 0.9
	1000	1.25..2 2.24..5.6	0.50 0.62	- 0.53	- 0.48	-	0.65 0.77	0.57 0.68	- 0.59	- 0.45	0.89 0.96	0.81 0.89	- 0.81	- 0.70
	1500	1.25..2 2.24..3.55 4..5.6	0.39 0.50 0.67	- - 0.47	- - -	- - -	0.57 0.8 0.84	- 0.50 0.62	- - -	- - -	0.83 0.94 1.07	- 0.77 0.86	- 0.68	- - -
JRHH2..	750	5..9 10..28	0.63 0.67	0.55 0.65	0.57 0.64	0.57 0.65	0.77 0.79	0.72 0.78	0.70 0.77	0.72 0.77	0.95 0.95	0.95 0.95	0.95 0.95	0.95 0.95
	1000	5..9 10..28	0.63 0.71	0.51 0.65	0.48 0.63	- 0.60	0.79 0.86	0.66 0.80	0.62 0.76	- 0.73	1.01 1.05	0.90 1.01	0.86 0.98	0.92 0.94
JRHB2..	1500	5..6.3 7..9 10..16 18..28	0.53 0.61 0.71 0.77	- 0.45 0.53 0.66	- - 0.51 0.60	- - - -	0.72 0.78 0.89 0.94	0.56 0.59 0.67 0.84	- - 0.64 0.74	- - - 0.65	1.00 1.05 1.14 1.18	0.84 0.83 0.93 1.08	- 0.77 0.88 1.00	- - 0.79 0.88
JRHH3..	750	12.5..112	0.67	0.67	0.67	0.67	0.79	0.79	0.79	0.78	0.95	0.95	0.95	0.95
	1000	12.5..112	0.72	0.70	0.67	0.67	0.86	0.85	0.82	0.80	1.04	1.04	1.02	1.00
JRHB3..	1500	12.5..31.5 35.5..56 63..112	0.73 0.79 0.83	0.59 0.74 0.83	0.51 0.66 0.80	0.50 0.61 0.77	0.91 0.95 0.98	0.80 0.91 0.98	0.64 0.83 0.95	0.62 0.77 0.92	1.15 1.17 1.18	1.05 1.14 1.18	0.90 1.06 1.17	0.84 1.02 1.14
JRHH4..	750	80..450	0.71	0.72	0.73	0.73	0.84	0.85	0.85	0.85	1.00	1.00	1.00	1.00
	1000	80..450	0.76	0.77	0.78	0.78	0.90	0.91	0.91	0.91	1.09	1.09	1.09	1.09
JRHB4..	1500	80..112 125..450	0.79 0.84	0.82 0.86	0.80 0.85	0.72 0.85	0.98 1.01	0.99 1.02	0.98 1.01	0.98 1.01	1.21 1.23	1.21 1.23	1.21 1.23	1.21 1.23

Table10	Thermal capacity factor for gear units with fan													f_{10}
Gear unit type	n r/min	Ratio i	Small confined spaces				Large halls workshops				In the open			
			3...6	7...12	13...18	19...28	3...6	7...12	13...18	19...28	3...6	7...12	13...18	19...28
JRHH1SH	750	1.25..112	0.88	0.91	0.96	0.96	0.91	0.93	0.97	0.97	0.98	0.98	0.98	0.98
JRHH2..JRHH3..	1000		1.05	1.10	1.13	1.15	1.08	1.12	1.14	1.14	1.15	1.16	1.16	1.16
JRHB2..JRHB3..	1500		1.39	1.44	1.43	1.42	1.41	1.45	1.43	1.42	1.47	1.48	1.45	1.44

Table11	Thermal capacity factor for gear units with cooling coil													f_{11}
Gear unit type	n r/min	Ratio i	Small confined spaces				Large halls workshops				In the open			
			4...6	7...13	14...16	17...18	4...6	7...13	14...16	17...18	4...6	7...13	14...16	17...18
JRHH1SH	750	1.25..28	0.82	0.85	0.84	0.87	0.89	0.90	0.90	0.91	0.98	0.98	0.98	0.98
JRHH2..	1000		092	0.98	0.94	0.94	1.02	1.03	1.00	1.00	1.12	1.12	1.08	1.07
JRHB2..	1500		110	1.12	0.99	0.93	1.21	1.20	1.05	1.00	1.34	1.30	1.14	1.08
JRHH3.. JRHB3..	750	12.5..112	0.84				0.90				0.98			
	1000		0.96				1.04				1.12			
	1500		1.18				1.28				1.38			

Table12	Thermal capacity factor for gear units with fan and cooling coil									f_{12}
Gear unit type	n r/min	Ratio i	Small confined spaces			Large halls workshops			In the open		
			4...6	7...12	13...18	4...6	7...12	13...18	4...6	7...12	13...18
JRHH1SH	750	1.25..112	0.91	0.95	0.96	0.94	0.96	0.97	0.98	0.98	0.98
JRHH2..JRHH3..	1000		1.11	1.16	1.16	1.13	1.17	1.17	1.17	1.19	1.18
JRHB2..JRHB3..	1500		1.50	1.55	1.50	1.51	1.56	1.51	1.55	1.57	1.51

*)Wind velocity≥1m/s **)Wind velocity≥2m/s ***)Wind velocity≥4m/s ****)On request

-Require auxiliary cooling

6. Technical Specifications


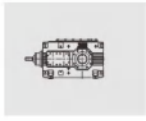
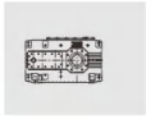


Helical gear units Nominal Power Ratings

Type JRHH1..,JRHH2.. Sizes 3–19

Nominal Power Ratings																				
			Gear unit Sizes																	
i_N	n_1	n_2	3	4	5	6	7	8	9	10	11	12	13	14	15	16	17	18	19
	r/min		Nominal Power Ratings P_N(kW)																
1.25	1800	1440	437		1206		2291		3724										
	1500	1200	364		1005		1909		3103										
	1000	800	242		670		1273		2069										
	750	600	182		503		955		1552										
1.4	1800	1286	417		1104		2141		3447										
	1500	1071	347		919		1783		2870										
	1000	714	231		613		1189		1913										
	750	536	174		460		892		1435										
1.6	1800	1125	388		1013		1920		3192										
	1500	938	324		844		1600		2661		4518								
	1000	625	215		562		1067		1774		3010		4410						
	750	469	162		422		800		1331		2259								
1.8	1800	1000	282		921		1821		2931		4984								
	1500	833	235		767		1517		2442		4151		4127						
	1000	556	157		512		1011		1628		2771		3095						
	750	417	118		384		759		1221		2076								
2	1800	900	263		885		1677		2704		4627								
	1500	750	219		738		1397		2442		3856								
	1000	500	146		492		931		1628		2570		3816						
	750	375	110		369		698		1221		1928		2862						
2.24	1800	804	235		808		1498		2416		4259								
	1500	670	196		673		1248		2013		3549								
	1000	446	130		448		831		1342		2363		3511						
	750	335	98		337		624		1007		1775		2633						
2.5	1800	720	218		723		1341		2163		3814								
	1500	600	182		603		1118		1803		3179								
	1000	400	121		402		745		1202		2119		3225		4900				
	750	300	91		302		559		902		1590		2419		3675				
2.8	643	208	646		1151		1831		3406		1800								
	1500	536	173		538		959		1526		2839		4321						
	1000	357	115		358		639		1016		1891		2878		4485				
	750	268	87		269		480		763		1420		2158		3364				
3.15	1800	571	185		573		1040		1680		2875		4370						
	1500	476	154		478		867		1400		2397		3643						
	1000	317	102		318		577		932		1598		2429		4116				
	750	238	77		239		434		700		1199		1822		3087				
3.55	1800	507	169		504		944		1518		2665		3949						
	1500	423	141		420		788		1266		2223		3295						
	1000	282	94		280		525		844		1482		2197		3720				
	750	211	71		210		394		633		1112		1648		2790				
4	1800	450	150		452		838		1352		2384		3567						
	1500	375	125		376		698		1126		1986		2972						
	1000	250	83		251		465		751		1324		1981		3403		4528		
	750	188	63		188		349		563		993		1486		2552		3396		
4.5	1800	400	104		322		661		1030		1926		2580		4565				
	1500	333	87	220	268		550		857		1603		2147		3800				
	1000	222	58	146	178		367		571		1069		1431		2533		3393		
	750	167	44	110	134		275		429		802		1074		1900		2545		
5	1800	360	90		271		520		885		1458		2197		3581		4674		
	1500	300	75	198	226		433		738		1215		1831		2984		3895		
	1000	200	50	132	150		289		492		810		1221		1989		2597		3643
	750	150	38	99	113		217		369		608		916		1492		1948		2732
5.6	1800	321	77		231		440		675		1226		1862		3038		3966		
	1500	268	64	178	193		367		564		1024		1554		2536		3311		4209
	1000	179	43	118	129		245		376		684		1036		1691		2207		2806
	750	134	32	88	97		184		282		512		777		1268		1656		2105

Forced lubrication required on horizontal gear units

JRHH

Helical gear units Thermal Capacities

Type JRHH1..,JRHH2.. Sizes 3-19






Thermal Capacities																				
i_N		Gear unit Sizes 3	4	5	6	7	8	9	10	11	12	13	14	15	16	17	18	19	20
		Themal capacity P_G(in kW)dependent on kind of cooling;P_{G1}:without auxiliary cooling.P_{G2}:fan cooling,P_{G3}:cooling coil,P_{G4}:fan and cooling coil.																		
1.25	P_{G1}																			
	P_{G2}	210		372		408														
	P_{G3}	307		686		946		1276												
	P_{G4}	472		1117		1537		1991												
1.4	P_{G1}																			
	P_{G2}	212		392		447		375												
	P_{G3}	299		680		937		1285												
	P_{G4}	459		1104		1523		1992												
1.6	P_{G1}																			
	P_{G2}	213		420		500		495												
	P_{G3}	284		655		894		1276		1944		2060								
	P_{G4}	438		1063		1452		1982		3039		3187								
1.8	P_{G1}																			
	P_{G2}	241		435		554		575												
	P_{G3}	309		625		894		1259		1990		2161								
	P_{G4}	478		1019		1450		1953		3106		3328								
2	P_{G1}																			
	P_{G2}	234		427		553		590		509										
	P_{G3}	295		593		852		1207		1947		2161		1626						
	P_{G4}	455		964		1382		1873		3026		3313		2826						
2.24	P_{G1}																			
	P_{G2}	227		422		544		620		631										
	P_{G3}	278		558		779		1151		1902		2172		1719						
	P_{G4}	431		913		1264		1790		2964		3336		2963						
2.5	P_{G1}																			
	P_{G2}	211		405		525		614		676										
	P_{G3}	251		518		723		1075		1810		2102		1746						
	P_{G4}	388		848		1172		1674		2819		3228		2972						
2.8	P_{G1}	50																		
	P_{G2}	199		384		553		658		705										
	P_{G3}	231		475		733		1091		1698		2002		1748		1836				
	P_{G4}	359		777		1189		1695		2647		3075		2947		3087				
3.15	P_{G1}	63.8																		
	P_{G2}	200		415		702		828		1055		1033		816						
	P_{G3}	226		481		881		1237		1858		2221		2223		2487				
	P_{G4}	348		779		1442		1941		2879		3394		3634		4035				
3.55	P_{G1}	59.8																		
	P_{G2}	183		407		649		778		998		1014		860		678				
	P_{G3}	204		460		791		1124		1685		2042		2087		2387				
	P_{G4}	314		746		1301		1768		2617		3123		3397		3839				
4	P_{G1}	56.2		85.1																
	P_{G2}	166		374		591		677		964		1012		938		821		623		
	P_{G3}	181		410		696		937		1534		1870		1943		2263				
	P_{G4}	280		665		1147		1483		2387		2866		3159		3625				
4.5	P_{G1}	66.4		106		135														
	P_{G2}	180		389		611		795		994		1193		1261		1192		1069		
	P_{G3}	194		413		696		1049		1489		1992		2075		2382				
	P_{G4}	298		669		1137		1646		2330		3062		3339		3779				
5	P_{G1}	62.5		111		151		169												
	P_{G2}	165		373		599		738		1020		1227		1395		1560		1526		
	P_{G3}	173		390		659		930		1427		1911		2022		2660				
	P_{G4}	266		631		1080		1464		2242		2942		3255		4202				
5.6	P_{G1}	56		98.8		136		163												
	P_{G2}	146		330		535		704		967		1104		1266		1433		1604		
	P_{G3}	151		337		577		866		1337		1675		1787		2367				
	P_{G4}	232		548		949		1370		2106		2586		2880		3741				

JRHH1

Helical gear units Nominal Power Ratings

Type JRHH2..,JRHH3.. Sizes 4–28


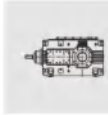

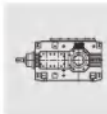

Nominal Power Ratings																													
			Gear unit Sizes																										
i_N	n_1	n_2	3	4	5	6	7	8	9	10	11	12	13	14	15	16	17	18	19	20	21	22	23	24	25	26	27	28	
	r/min		Nominal Power Ratings P_N(kW)																										
6.3	1800	286	98	188	320		607		1009		1775		2575		4282														
	1500	238	82	157	266		505		839		1477		2143		3563		4859		7292										
	1000	159	55	105	177		337		559		985		1429		2375		3239		4861										
	750	119	41	78	133		253		420		739		1072		1782		2430		3646				6233		9973				
7.1	1800	254	88	172	297		539		896		1577		2287		3803	4255													
	1500	211	73	139	247		448		744		1310		1900		3159	3535	4308	5093	6467	7419									
	1000	141	49	93	165		299		496		873		1267		2106	2357	2872	3395	4311	4946									
	750	106	37	70	124		224		372		655		950		1580	1768	2154	2546	3233	3710			5752	6250	9125	10066			
8	1800	225	78	157	263	318	478	603	793	994	1397	1738	2026	2520	3369	3769	4594												
	1500	188	65	131	220	265	399	503	663	830	1167	1452	1692	2106	2815	3149	3838	4527	5732	6576									
	1000	125	43	88	147	177	266	335	442	553	778	968	1128	1404	1877	2099	2559	3018	3821	4384									
	750	94	32	66	110	133	200	252	332	415	584	726	846	1053	1408	1575	1919	2264	2866	3288			5301	5743	8442	9228	10357		
9	1800	200	70	140	234	301	425	536	705	883	1241	1545	1801	2240	2994	3350	4083	4816											
	1500	167	58	117	195	251	354	447	589	737	1036	1290	1503	1871	2500	2797	3409	4021	5090	5840									
	1000	111	38	78	130	167	236	298	393	491	691	860	1002	1247	1667	1865	2273	2681	3393	3893	4765								
	750	83	29	58	98	126	177	224	295	369	518	645	752	936	1250	1399	1705	2011	2545	2920	3574		4843	5323	7504	8595	9468	10515	
10	1800	180	62	118	197	271	382	482	635	795	1117	1390	1620	2016	2695	3015	3675	4335											
	1500	150	52	99	164	226	318	402	529	662	931	1159	1350	1680	2246	2513	3062	3612	4586	5261									
	1000	100	34	66	109	151	212	268	353	441	621	773	900	1120	1497	1675	2041	2408	3057	3507	4293	4795							
	750	75	26	49	82	113	159	201	265	331	466	580	675	840	1123	1257	1531	1806	2293	2630	3220	3596	4516	4908	6754	8010	8874	9738	
11.2	1800	161	55	106	178	242	342	431	568	711	999	1244	1449	1803	2410	2697	3287	3877	4922										
	1500	134	46	88	148	202	284	359	472	592	832	1035	1206	1501	2006	2245	2736	3227	4097	4700									
	1000	89	31	59	99	135	189	239	315	395	555	690	804	1001	1337	1497	1824	2151	2731	3133	3820	4268	5376						
	750	67	23	44	74	101	142	180	236	296	416	518	603	751	1003	1123	1368	1614	2049	2350	2865	3201	4032	4523	6030	7222	8239	9010	
12.5	1800	144	49	101	168	203	304	386	508	636	894	1112	1296	1613	2156	2412	2940	3468	4402										
	1500	120	41	84	140	169	253	321	423	530	745	927	1080	1344	1796	2010	2450	2890	3669	4209									
	1000	80	28	56	93	113	169	214	282	353	497	618	720	896	1197	1340	1633	1927	2446	2806	3434	3836	5026	5445					
	750	60	21	42	70	85	127	161	212	265	373	464	540	672	898	1005	1225	1445	1835	2105	2576	2877	3770	4084	5403	6471	7602	8419	
14	1800	129	44	90	151	182	274	345	455	570	801	996	1161	1445	1931	2161	2634	3106	3944	4525									
	1500	107	37	75	125	151	227	286	377	472	664	826	963	1198	1602	1792	2184	2576	3271	3753	4593								
	1000	71	24	50	83	101	151	191	251	315	443	551	642	799	1068	1195	1456	1717	2181	2502	3048	3405	4637	5049					
	750	54	18	38	63	76	114	143	189	236	332	413	482	599	801	896	1092	1288	1636	1877	2286	2554	3478	3786	4824	5778	6900	7713	
16	1800	113	38	79	132	170	240	301	398	499	701	873	1017	1266	1692	1893	2307	2721	3455	3963	4851								
	1500	94	32	66	110	141	199	250	331	415	583	726	846	1053	1407	1574	1919	2263	2874	3297	4035	4508							
	1000	63	22	44	73	94	133	167	221	277	389	484	564	702	938	1049	1279	1509	1916	2198	2704	3021	4188	4548					
	750	47	16	33	55	71	100	125	166	208	292	363	423	527	704	787	960	1132	1437	1649	2028	2266	3151	3411	4221	5056	6037	6872	
18	1800	100	35	65	109	150	198	268	352	441	620	772	900	1120	1497	1675	2041	2408	3057	3507	4293	4795							
	1500	83	29	55	91	125	165	222	292	366	515	641	747	929	1242	1390	1694	1998	2537	2911	3563	3980							
	1000	56	19	37	61	83	110	148	195	244	343	427	498	619	828	927	1129	1332	1691	1941	2404	2685	3723	4218					
	750	42	14	28	46	63	83	111	146	183	258	321	374	465	621	695	847	999	1269	1456	1803	2014	2792	3163	3752	4494	5366	6108	
20	1800	90	31	62	105	135	179	241	317	397	558	695	810	1008	1347	1507	1837	2167	2751	3157	3863	4316							
	1500	75	26	52	87	113	149	201	264	331	465	579	675	840	1123	1256	1531	1806	2293	2630	3219	3596							
	1000	50	17	35	58	75	99	134	176	221	310	386	450	560	749	837	1021	1204	1529	1753	2146	2397	3063	3796					
	750	38	13	26	44	57	75	101	132	166	233	290	338	420	562	628	766	903	1147	1315	1610	1798	2297	2847	3141	4045	4516	5497	
22.4	1800	80	28	52	91	113	165	201	277	353	488	618	737	896	1281	1340	1675	1926	2513	2806	3518	3836	4691						
	1500	67	23	44	76	94	138	168	232	296	409	517	617	750	1073	1122	1403	1613	2104	2350	2946	3213							
	1000	45	15	30	51	63	92	112	155	197	273	345	411	500	715	748	935	1075	1403	1567	1979	2158	2805	3085	4020	3829	5750		
	750	33	11	22	38	47	69	84	116	148	205	259	309	375	537	561	702	807	1052	1175	1484	1619	2104	2314	3015	2190	4312	4593	
25	1800	72			87	107	163	180	269	318	478	556	663	806	1153	1304	1507	1809	2261	2601	3166	3543	4221	4825					
	1500	60			72	89	136	150	224	265	398	463	552	672	961	1086	1256	1507	1884	2167	2638	2952							
	1000	40			48	59	91	100	149	177	265	309	368	448	641	724	837	1005	1256	1445	1759	1968	2597	2827	3602	4314	5152	5864	
	750	30			36	45	68	75	112	133	199	232	276	336	481	543	628	754	942	1084	1319	1476	1948	2120	2702	3236	3864	4398	
28	1800	64			77	93	145	167	239	278	425	485	589	730	1025	1159	1340	1608	2010	2312	2814	3149	3752	4289					
	1500	54			65	78	122	141	201	235	359	409	497	616	865	978	1130	1357	1696	1950	2374	2657							
	1000	36			43	52	81	94	134	157	239	273	331	411	577	652	753	905	1131	1300	1583	1771	2393	2618	3216	3852	4600	5236	
	750	27			33	39	61	71	101	118	180	205	249	308	433	489	565	679	848	975	1187	1328	1795	1963	2412	2889	3450	3927	
31.5	1800	57			69	92	129	162	213	261	379	460	525	650	913	1032	1193	1432	1790	2059	2506	2805	3342	3819	4774				
	1500	48			58	77	109	136	179	220	319	388	442	547	769	869	1005	1206	1507	1734	2110	2362							
	1000	32			39	51	73	91	119	147	213	259	295	365	513	579	670	804	1005	1156	1407	1574	2127	2410	2859	3424	4089	4654	
	750	24			29	39	55	68	90	110	160	194	221	274	385	435	503	603	754	867	1055	1181	1596	1808	2144	2568	3067	3490	
35.5	1800	51			61	82	115	145	190	233	339	412	469	582	817	923	1068	1281	1602	1842	2242	2509	2990	3417	4272	4806			
	1500	42			51	68	95	119	157	192	279	339	387	479	672	760	879	1055	1319	1517	1847	2067							
	1000	28			34	45	63	79	105	128	186	226	258	319	448	507	586	703	879	1011	1231	1378	1888	2138	2537	3038	3628	4129	
	750	21			26	34	48	60	79	96	140	170	194	240	336	380	440	528	660	759	923	1034	1416	1604	1903	2279	2721	3097	

Helical gear units Thermal Capacities

Type JRHH2..,JRHH3.. Sizes 4–28






Thermal Capacities																												
i_N		Gear unit Sizes 3	4	5	6	7	8	9	10	11	12	13	14	15	16	17	18	19	20	21	22	23	24	25	26	27	28
		Themal capacity P_G(in kW)dependent on kind of cooling;P_{G1}:without auxiliary cooling.P_{G2}:fan cooling,P_{G3}:cooling coil,P_{G4}:fan and cooling coil.																										
6.3	P_{G1}		48.5	48.8																								
	P_{G2}		132	172		256		322		428		442				1410	1410											
	P_{G3}		146	226		357		542		746		1197		1267		2151	2151											
	P_{G4}		210	327		525		774		1124		1739		1824														
7.1	P_{G1}		51.6	53.9																								
	P_{G2}		137	177		252		323		453		493		338														
	P_{G3}		148	226		338		516		740		1193		1289	1305	1458	1458	1443										
	P_{G4}		214	327		499		735		1117		1728		1851	1880	2199	2199	2209										
8	P_{G1}		51.4	56.4	59.2	64.9																						
	P_{G2}		132	175	191	249	276	322	328	469	501	537	580	422	390													
	P_{G3}		140	219	236	323	367	496	545	720	961	1171	1319	1306	1332	1507	1507	1500										
	P_{G4}		202	316	341	479	542	707	772	1088	1397	1700	1923	1860	1910	2261	2261	2260										
9	P_{G1}		52.4	60.5	67.8	73.2	77.2	86.3																				
	P_{G2}		129	174	198	248	275	324	323	484	553	600	666	541	530	584	584	542										
	P_{G3}		135	211	238	311	352	477	521	686	968	1159	1335	1332	1386	1593	1593	1608										
	P_{G4}		196	303	344	458	518	682	736	1033	1405	1679	1927	1889	1970	2360	2360	2400										
10	P_{G1}		51.4	61.1	70.9	77.7	84.2	96	95.3																			
	P_{G2}		123	165	196	241	273	320	335	489	577	631	715	612	617	710	710	691										
	P_{G3}		126	196	230	295	338	453	503	657	943	1128	1309	1316	1383	1611	1611	1649										
	P_{G4}		182	282	331	436	498	648	710	987	1375	1628	1896	1861	1964	2374	2374	2447										
11.2	P_{G1}		50.4	61.2	72.2	83.4	88	99.9	103	119																		
	P_{G2}		118	160	191	246	267	309	331	509	572	674	738	648	669	784	784	787										
	P_{G3}		120	185	221	294	321	427	479	662	882	1135	1274	1269	1354	1582	1582	1651										
	P_{G4}		174	268	319	436	475	610	679	995	1283	1642	1838	1796	1913	2323	2323	2431										
12.5	P_{G1}		49.5	62.1	70.5	85.6	88.3	104	106	135																		
	P_{G2}		113	157	181	242	258	305	322	512	562	660	742	685	691	851	851	840										
	P_{G3}		116	183	204	289	305	415	454	655	837	1056	1215	1272	1302	1579	1579	1605										
	P_{G4}		166	263	295	425	450	589	644	978	1218	1523	1755	1790	1836	2311	2311	2355										
14	P_{G1}		47.6	60.4	69.5	81.7	93.2	106	108	142	153																	
	P_{G2}		108	150	174	224	263	298	310	494	583	647	774	686	726	875	875	906										
	P_{G3}		108	171	193	259	304	393	425	611	841	991	1220	1205	1298	1511	1511	1600										
	P_{G4}		155	243	279	384	449	562	603	914	1223	1434	1761	1697	1832	2211	2211	2342										
16	P_{G1}		44.1	57.8	69.8	78.6	94.9	104	110	144	169	160	193															
	P_{G2}		98.9	140	169	210	257	281	303	469	583	603	751	710	721	873	873	919										
	P_{G3}		98.1	157	191	239	297	363	414	561	827	887	1125	1196	1226	1429	1429	1528										
	P_{G4}		141	225	273	352	438	518	584	839	1197	1286	1626	1684	1726	2088	2088	2236										
18	P_{G1}		42.7	56.4	67.6	77.3	89.8	101	111	143	175	181	209	170														
	P_{G2}		94.4	134	162	202	237	266	296	443	560	621	731	690	748	888	888	919										
	P_{G3}		92.4	148	177	229	268	339	392	527	769	899	1057	1119	1219	1387	1387	1442										
	P_{G4}		132	213	255	338	395	486	555	790	1115	1297	1526	1578	1718	2020	2020	2114										
20	P_{G1}		42	53.3	64	73.1	86.3	100	107	142	170	179	202	179	182													
	P_{G2}		92.1	126	150	188	222	257	278	428	525	586	670	665	712	882	882	915										
	P_{G3}		89.4	138	162	209	247	326	362	499	702	823	941	1036	1133	1342	1342	1382										
	P_{G4}		128	198	235	310	363	365	512	747	1019	1191	1360	1455	1597	1956	1956	2019										
22.4	P_{G1}		38.9	49.7	61.3	70.7	82.4	92.6	101	133	159	169	206	193	179	180	180											
	P_{G2}		85.2	116	144	181	213	239	261	397	489	346	673	463	676	450	450	893										
	P_{G3}		81.5	125	155	200	235	293	337	454	657	668	942	1050	1041	1035	1035	1329										
	P_{G4}		117	181	223	295	346	420	478	682	954	811	1362	1267	1467	1228	1228	1939										
25	P_{G1}			52.5	57.6	76.1	77.2	100	98.9	138	155	167	195	192	193	180	180											
	P_{G2}			92.4	134	138	197	187	252	275	470	338	627	453	470	442	442	455										
	P_{G3}			130	142	208	216	302	323	507	617	636	862	992	1059	979	979	1035										
	P_{G4}			163	206	261	318	378	458	626	898	771	1245	1201	1277	1164	1164	1227										
28	P_{G1}			50.9	54.1	77.5	75.5	101	93.4	137	150	169	191	206	207	198	198	196	222									
	P_{G2}			89.4	125	140	190	186	235	268	439	334	380	463	475	455	455	464										
	P_{G3}			123	130	207	206	294	292	477	562	600	701	966	1008	953	953	988										
	P_{G4}			155	187	261	302	368	417	593	819	734	854	1179	1224	1145	1145	1182										
31.5	P_{G1}			49.9	57.4	75.3	82.8	100	102	137	159	173	196	217	222	212	212	216	246	249								
	P_{G2}			86.9	99.6	135	148	183	188	263	308	332	377	468	487	463	463	480										
	P_{G3}			118	135	195	214	283	352	457	523	580	670	930	981	924	924	967										
	P_{G4}			149	170	248	268	355	432	570	650	710	819	1143	1202	1116	1116	1165										
35.5	P_{G1}			48.6	55.7	73.9	84.4	98.7	104	135	158	175	198	222	235	221	221	232	268	276	273							
	P_{G2}			84.3	96.2	132	150	178	186	257	300	328	374	461	493	459	459	489										
	P_{G3}			113	127	188	211	271	343	434	492	555	634	870	948	863	863	935										
	P_{G4}			143	161	239	268	342	421	544	617	683	781	1075	1171	1052	1052	1137										

Helical gear units Nominal Power Ratings

Type JRHH3..,JRHH4.. Sizes 5-28

Nominal Power Ratings																											
			Gear unit Sizes																								
i_N	n_1	n_2	5	6	7	8	9	10	11	12	13	14	15	16	17	18	19	20	21	22	23	24	25	26	27	28	
	r/min		Nominal Power Ratings P_N(kW)																								
40	1800	45	54	73	102	128	168	206	299	363	414	513	720	815	942	1130	1413	1625	1979	2214	2638	3015	3769	4240			
	1500	37.5	46	61	86	108	142	174	252	307	350	433	608	688	795	954	1193	1372	1671	1870							
	1000	25.0	31	41	57	72	95	116	168	205	233	289	405	459	530	636	795	915	1099	1230	1675	1898	2251	2696	3220	3665	
	750	18.8	23	31	43	54	71	87	126	154	175	217	304	344	398	477	597	686	836	935	1257	1423	1688	2022	2415	2749	
45	1800	40	48	64	90	113	149	183	265	323	368	456	640	724	837	1005	1256	1445	1759	1968	2345	2680	3350	3769			
	1500	33.3	40	53	74	93	123	151	219	266	304	376	528	597	691	829	1036	1192	1451	1624							
	1000	22.2	27	35	49	62	82	101	146	177	203	251	352	398	461	553	691	795	967	1082	1489	1687	2001	2397	2862	3258	
	750	16.7	20	27	37	47	62	76	110	133	152	188	264	299	346	415	518	596	726	812	1117	1265	1501	1798	2147	2443	
50	1800	36	43	58	81	102	134	165	239	291	331	410	576	652	753	904	1130	1300	1583	1771	2110	2412	3015	3392			
	1500	30.0	36	48	68	85	112	137	199	242	276	342	480	543	628	753	942	1083	1319	1476	2010	2277					
	1000	20.0	24	32	45	57	75	91	133	161	184	228	320	362	419	502	628	722	879	984	1340	1518	1801	2157	2576	2932	
	750	15.0	18	24	34	43	56	69	100	121	138	171	240	272	314	377	471	542	660	738	1005	1139	1351	1618	1932	2199	
56	1800	32	38	51	72	91	119	146	212	258	294	365	512	579	670	804	1005	1156	1407	1574	1876	2144	2680	3015			
	1500	26.8	32	43	61	76	100	123	179	218	248	308	432	489	565	678	848	975	1187	1328	1795	2033					
	1000	17.9	21	29	41	51	67	82	119	145	165	205	288	326	377	452	565	650	787	880	1197	1356	1608	1926	2300	2618	
	750	13.4	16	22	31	38	50	62	90	109	124	154	216	245	283	339	424	488	594	664	898	1017	1206	1444	1725	1963	
63	1800	29	35	47	65	82	108	133	192	234	267	330	464	525	607	728	910	1047	1275	1427	1700	1943	2429	2732			
	1500	23.8	29	38	54	68	89	110	159	194	221	273	384	434	502	603	753	867	1055	1181	1596	1808	2144				
	1000	15.9	19	25	36	45	59	73	106	129	147	182	256	289	335	402	502	578	699	782	1064	1205	1429	1712	2044	2327	
	750	11.9	15	19	27	34	45	55	80	97	111	137	192	217	251	302	377	434	528	591	798	904	172	1284	1533	1745	
71	1800	25	30	40	56	71	93	114	166	202	230	285	400	452	523	628	785	903	1099	1230	1465	1675	2094	2356			
	1500	21.1	25	34	47	59	78	96	139	169	193	239	336	380	439	527	659	758	923	1033	1416	1604	1903	2279			
	1000	14.1	17	23	31	39	52	64	93	113	129	159	224	253	293	351	439	505	620	693	944	1069	1268	1519	1814	2065	
	750	10.6	13	17	24	30	39	48	70	85	97	120	168	190	220	264	330	379	462	517	708	802	951	1139	1361	1549	
80	1800	23	27	37	52	65	85	105	152	185	211	262	368	416	481	578	722	830	1011	1131	1348	1541	1926	2167			
	1500	18.8	22	30	42	53	70	86	125	151	173	214	301	340	393	472	590	679	826	925	1257	1423	1688	2022			
	1000	12.5	15	20	28	35	47	57	83	101	115	143	201	227	262	315	393	453	549	615	838	949	1126	1348	1610	1832	
	750	9.4	11	15	21	27	35	43	63	76	87	107	151	170	197	236	295	340	413	463	628	712	844	1011	1207	1374	
90	1800	20	24	32	41	56	72	91	132	161	184	228	320	362	418	502	607	722	858	984	1172	1340	1675	1884			
	1500	16.7	20	27	34	47	60	76	111	134	153	190	267	302	349	419	507	603	716	821	1021	1265	1396	1798			
	1000	11.1	13	18	23	31	40	51	74	89	102	127	178	201	233	279	338	402	476	546	681	844	931	1198	1338	1629	
	750	8.3	10	14	17	24	30	38	56	67	77	95	134	151	175	210	254	302	358	411	510	633	698	899	1003	1222	
100	1800	18		27	40	51	67	82	116	145	170	205	288	326	376	425	565	631	791	876	1055	1206	1507	1696			
	1500	15.0		22	34	42	56	68	96	121	142	171	240	271	314	354	471	526	659	730	1005	1037	1351	1429	1932		
	1000	10.0		15	23	28	37	45	64	81	95	114	160	181	209	236	314	351	439	486	670	691	901	953	1288	1372	
	750	7.5		11	17	21	28	34	48	61	71	86	120	136	157	177	236	263	330	365	503	518	675	715	966	1029	
112	1800	16.1		25	36	42	60	72	103	130	152	183	257	291	337	404	505	581	708	792	944	1078	1348	1517			
	1500	13.4		21	30	35	50	60	86	108	127	152	214	242	280	336	420	484	589	659	898	1017	1206	1444	1725	1963	
	1000	8.9		14	20	23	33	40	57	72	85	101	143	161	187	224	280	323	391	438	598	678	804	963	1150	1309	
	750	6.7		11	15	18	25	30	43	54	64	76	107	121	140	168	210	242	295	330	449	508	603	722	862	982	
125	1800	14.4			32	41	53	66	92	117	136	170	230	260	301	361	452	520	633	708	844	965	1206	1357			
	1500	12.0			27	34	44	55	77	98	113	141	192	217	251	301	376	433	527	590	804	911	1081	1294	1546	1759	
	1000	8.0			18	23	29	37	51	65	75	94	128	145	167	201	251	289	351	393	536	607	720	863	1030	1173	
	750	6.0			14	17	22	28	39	49	57	71	96	109	126	151	188	217	264	295	402	455	540	647	773	880	
140	1800	12.9			29	36	48	59	83	105	122	152	206	233	270	324	405	466	567	634	756	864	1080	1215			
	1500	10.7			24	30	39	49	69	87	101	126	171	193	224	268	336	386	470	526	718	813	965	1156	1380	1571	
	1000	7.1			16	20	26	33	46	58	67	84	114	129	149	179	224	257	312	349	479	542	643	770	920	1047	
	750	5.4			12	15	20	25	35	44	51	63	86	97	112	134	168	193	235	263	359	407	482	578	690	785	
160	1800	11.3			25	32	42	52	72	92	107	133	181	204	236	283	354	408	496	556	662	757	946	1064			
	1500	9.4			21	26	35	43	60	76	89	111	150	170	196	236	295	339	413	462	628	712	844	1011	1207	1374	
	1000	6.3			14	17	23	29	40	51	59	74	100	113	131	157	197	226	277	310	419	474	563	674	805	916	
	750	4.7			11	13	18	22	30	38	45	56	75	85	98	118	148	170	207	231	314	356	422	506	604	687	
180	1800	10			22	28	37	46	64	81	94	118	160	181	209	251	314	361	439	492	586	670	837	942			
	1500	8.3			18	23	31	38	53	67	78	98	132	150	173	208	260	299	365	408	558	633	750	899	1073	1222	
	1000	5.6			12	15	21	25	35	45	52	65	88	100	115	139	173	199	246	275	372	422	500	599	716	814	
	750	4.2			9	12	16	19	27	34	39	49	66	75	87	104	130	150	183	204	279	316	375	449	537	611	
200	1800	9			20	25	33	41	58	73	85	106	144	163	188	226	282	325	395	442	527	603	753	848			
	1500	7.5			17	21	28	34	48	61	71	88	120	135	157	188	235	270	329	369	503	569	675	809	966	1099	
	1000	5.0			11	14	19	23	32	41	47	59	80	90	105	125	157	180	219	246	335	380	450	539	644	733	
	750	3.8			9	11	14	17	24	31	36	44	60	68	79	94	118	135	165	185	251	285	338	404	483	550	
224	1800	8			18	22	29	37	51	65	75	94	128	144	167	201	251	289	351	393	469	536	670	753			
	1500	6.7			15	19	25	31	43	54	63	79	107	121	140	168	210	242	294	329	449	508	603	722	862	982	
	1000	4.5			10	13	17	21	29	36	42	53	71	81	93	112	140	161	197	221	299	339	402	481	575	654	
	750	3.3			8	10	13	16	22	27	32	40	54	61	70	84	105	121	147	165	224	254	302	361	431	491	
250	1800	7.2			16	20	26	33	46	58	68	85	115	130	150	180	226	260	316	354	422	482	603	678			
	1500	6.0			13	17	22	27	38	49	56	70	96	108	125	150	188	216	263	295	402	455	540	647	773	880	
	1000	4.0			9	11	15	18	25	33	37	47	64	72	83	100	125	144	175	196	268	304	360	431	515	586	
	750	3.0			7	9	11	14	19	25	28	35	48	54	63	75	94	108	132	148	201	228	270	324	386	440	
280	1800	6.4			14	18	23	29	41	52	60	75	102	115	134	160	201	231	281	314	375	428	536	603			
	1500	5.4			12	15	20	24	34	44	51	63	86	97	113	135	169	195	237	265	359	407	482	578	690	785	
	1000	3.6			8	10	13	16	23	29	34	42	57	65	75	90	113	130	158	177	239	271	322	385	460	524	
	750	2.7			6	8	10	12	17	22	26	32	43	49	57	68	85	98	119	133	180	203	241	289	345	393	
315	1800	5.7			12	16	21	26	36	46	54	67	91	103	119	143	179	205	250	280	334	381	477	537			
	1500	4.8			10	13	17	22	30	39	45	56	76	86	100	120	150	173	211	236	319	362	429	514	613	698	
	1000	3.2			7	9	11	15	20	26	30	37	51	57	67	80	100	115	140	157	213	241	286	342	409	465	
	750	2.4			5	7	9	11	15	20	23	28	38	43	50	60	75	87	106	118	160	181	214	257	307	349	
355	1800	5.1			10	14	19	23	32	41	48	60	74	92	102	128	154	184	218	250	299	341	427	480			
	1500	4.2			8.6	11	15	19	27	34	39	49	61	76	84	105	127	151	180	206	259	321	354	456	509	619	
	1000	2.8			5.7	7	10	13	18	23	26	33	41	51	56	70	85	101	120	137	173	214	236	304	339	413	
	750	2.1			4.3	6	8	10	14	17	20	25	31	38	42	53	64	76	90	103	129	160	177	228	254	310	
400	1800	4.5			12			20		36		53		74		105		157		219		301		424			
	1500	3.8				10		17		31		44		62		88		133		185		259		357		514	
	1000	2.5				7		11		21		29		41		59		89		121		173		238		343	
	750	1.9				5		9		16		22		31		44		67		93		130		179		257	
450	1800	4				10		17		32		47															
	1500	3.3				8.7		14		26		39															
	1000	2.2				5.8		9		17		26															
	750	1.7				4.4		7		13		20															

Helical gear units Thermal Capacities

Type JRHH3..,JRHH4.. Sizes 5-28






Thermal Capacities																										
		Gear unit Sizes																								
i_N		5	6	7	8	9	10	11	12	13	14	15	16	17	18	19	20	21	22	23	24	25	26	27	28	
		Themal capacity P_G(in kW)dependent on kind of cooling;P_{G1}:without auxiliary cooling.P_{G2}:fan cooling,P_{G3}:cooling coil,P_{G4}:fan and cooling coil.																								
40	P_{G1}	46.1	54.3	70.6	81.4	93.9	101	132	156	172	197	221	232	221	231	272	283	293	269							
	P_{G2}	79.5	93.4	125	144	170	182	248	293	318	366	449	476	449	474											
	P_{G3}	105	122	175	200	252	327	410	470	525	608	823	882	820	871											
	P_{G4}	133	154	223	254	319	404	514	589	649	750	1024	1094	1003	1066											
45	P_{G1}	44.2	52.5	68.2	79.2	90.8	99.1	132	151	166	192	223	227	224	227	276	280	297	278							
	P_{G2}	76.1	90.2	120	140	162	177	247	283	306	355	450	460	448	460											
	P_{G3}	99.7	117	167	192	239	314	401	447	495	579	809	835	804	823											
	P_{G4}	126	148	212	243	303	388	505	561	611	714	1006	1034	985	1009											
50	P_{G1}	43.2	50.1	65.2	76.6	90.6	95.9	134	151	171	195	240	246	242	250	304	313	360	344							
	P_{G2}	73.8	85.5	114	133	160	169	246	278	306	352	462	479	462	480											
	P_{G3}	96.4	109	157	181	235	293	395	425	485	551	809	827	797	815											
	P_{G4}	122	138	200	228	295	362	497	534	603	686	1009	1033	987	1012											
56	P_{G1}	41.2	48.5	62.7	74.4	87.3	93.4	127	154	170	192	239	256	243	260	310	329	379	387							
	P_{G2}	70.1	82.2	109	129	153	164	230	280	300	341	449	484	453	485											
	P_{G3}	90.6	103	148	172	219	278	359	417	461	521	759	822	752	808											
	P_{G4}	114	131	188	218	278	344	452	527	574	650	952	1028	934	1001											
63	P_{G1}	39.1	47	59	71	83.5	92.5	122	154	166	194	235	255	241	262	307	336	397	411							
	P_{G2}	66.1	79.2	102	122	145	160	219	276	288	338	434	473	439	474											
	P_{G3}	84.1	100	136	161	204	272	334	411	432	510	706	770	700	760											
	P_{G4}	106	126	172	205	259	338	421	518	538	637	889	973	876	950											
71	P_{G1}	38.7	44.6	57.3	67.7	81.8	88.2	120	144	162	188	230	243	234	249	306	316	381	400							
	P_{G2}	65.3	75	98.9	116	142	153	213	256	279	325	422	447	422	450											
	P_{G3}	83.1	93.8	130	151	200	255	322	371	412	484	680	715	671	706											
	P_{G4}	105	118	166	192	252	315	407	469	515	605	857	902	841	881											
80	P_{G1}	36.8	42.1	56	63.3	77.6	83.5	113	136	158	178	223	237	227	241	292	315	369	384							
	P_{G2}	61.9	70.3	96.6	108	134	143	201	241	272	308	406	434	406	433											
	P_{G3}	77.3	87.2	125	139	185	236	297	345	398	449	642	688	635	676											
	P_{G4}	97.9	110	160	177	236	293	377	437	496	564	812	868	795	846											
90	P_{G1}	36.3	41.8	53.1	61.4	73.8	81.6	110	134	148	173	211	231	215	233	280	300	363	372							
	P_{G2}	61.1	69.8	91.3	104	127	140	194	235	255	298	383	418	384	417											
	P_{G3}	75.1	86.4	116	133	172	231	285	333	365	430	595	651	588	640											
	P_{G4}	95.5	109	148	171	219	286	362	422	458	537	752	823	738	803											
100	P_{G1}		39.7	48.7	60.4	67.6	78	99.1	128	130	171	172	221	190	226	264	294	348	379							
	P_{G2}		66.2		102		133		223		293		397		397											
	P_{G3}		80.3		129		215		308		415		604		595											
	P_{G4}		101		165		266		392		520		764		748											
112	P_{G1}		39.3	47.1	57.2	65.1	74.3	99.1	124	129	161	167	179	186	198	259	276	352	358							
	P_{G2}		65.6		97.3		127		216		274															
	P_{G3}		78.3		119		199		296		382															
	P_{G4}		99.4		153		248		377		479															
125	P_{G1}			45.8	52.5	63.1	68.3	95.5	110	126	142	163	174	181	192	254	268	348	359							
140	P_{G1}			43.5	50.5	61.3	65.6	92.8	110	123	139	158	169	176	188	248	263	336	356							
160	P_{G1}			41.9	49.1	58	63.7	88.5	106	116	135	153	164	171	182	240	255	327	342							
180	P_{G1}			40.4	46.7	55.8	61.9	85.8	103	113	132	152	159	169	177	232	249	329	335							
200	P_{G1}			38.9	45.1	54	58.5	81.3	98.9	110	126	149	157	164	175	226	240	314	335							
224	P_{G1}			36.7	43.2	52	56.2	78.1	95.5	106	121	140	154	154	170	219	233	303	321							
250	P_{G1}			35.1	41.9	49.6	54.5	74.2	90.2	100	118	132	143	147	159	208	224	287	305							
280	P_{G1}			34	39.3	48.2	52.3	71.4	86.8	97.7	112	128	135	143	151	199	213	276	289							
315	P_{G1}			33.3	37.6	45.9	49.9	69.7	82.2	93.7	108	122	131	136	147	195	204	264	278							
355	P_{G1}			31.8	36.5	45.1	48.5	66.3	79.2	89.4	104	120	126	133	141	186	200	252	267							
400	P_{G1}				35.8		46.2		77.3		100		123		138		190		255							
450	P_{G1}				34		45.4		73.5		95.3															

Bevel-helical gear units Nominal Power Ratings

Type JRHB2..,JRHB3.. Sizes 4-28

Nominal Power Ratings																												
			Gear unit Sizes																									
i_N	n_1 r/min	n_2	4	5	6	7	8	9	10	11	12	13	14	15	16	17	18	19	20	21	22	23	24	25	26	27	28
			Nominal Power Ratings P_N(kW)																									
5	1800	360	229	354		716		1127		1734		2585		4598														
	1500	300	191	295		596		939		1445		2154		3832														
	1000	200	127	197		397		626		963		1436		2555														
	750	150	96	148		298		470		723		1077		1916														
5.6	1800	321	208	315		638		1005		1616		2339		4100	4537													
	1500	268	173	263		533		839		1349		1953		3423	3788													
	1000	179	116	175		355		559		899		1302		2282	2525	3654												
	750	134	87	132		267		420		675		977		1712	1894													
6.3	1800	286	185	281	359	569	712	895	1138	1503	1760	2210	2551	3893	4222													
	1500	238	154	234	299	473	593	745	947	1251	1465	1839	2123	3239	3513	4859												
	1000	159	103	156	199	315	395	497	631	834	977	1226	1415	2159	2342	3239												
	750	119	77	117	150	237	297	373	474	626	733	920	1062	1620	1757	2430												
7.1	1800	254	164	250	319	505	633	795	1010	1393	1619	2018	2321	3510	3856													
	1500	211	136	207	265	419	525	660	839	1157	1345	1676	1928	2916	3203	4308												
	1000	141	91	138	177	279	350	440	559	771	897	1117	1285	1944	2135	2872	3395											
	750	106	68	104	133	210	263	330	420	579	673	838	964	1458	1602	2154												
8	1800	225	146	221	282	447	560	704	895	1272	1486	1884	2155	3109	3486	4594												
	1500	188	122	185	236	374	468	588	748	1063	1242	1574	1801	2598	2913	3838	4527											
	1000	125	81	123	157	249	312	392	499	709	828	1049	1201	1732	1942	2559	3018											
	750	94	61	93	118	187	234	294	374	532	621	787	901	1299	1457	1919	2264											
9	1800	200	129	196	251	397	498	626	795	1130	1365	1698	1981	2764	3099	4083	4816											
	1500	167	108	164	209	332	416	522	664	944	1140	1418	1654	2308	2588	3409	4021											
	1000	111	72	109	139	221	277	348	443	629	760	945	1103	1539	1725	2273	2681											
	750	83	54	82	105	166	208	261	332	472	570	709	827	1154	1294	1705	2011											
10	1800	180	116	177	226	358	448	563	716	1017	1249	1528	1862	2487	2789	3675	4335											
	1500	150	97	147	188	298	373	469	596	848	1041	1273	1551	2073	2324	3062	3612											
	1000	100	64	98	125	199	249	313	397	565	694	849	1034	1382	1549	2041	2408											
	750	75	49	74	94	149	187	235	298	424	521	637	776	1037	1162	1531	1806											
11.2	1800	161	104	158	202	320	401	504	640	910	1117	1367	1709	2225	2495	3287	3877											
	1500	134	86	131	168	266	333	419	533	757	930	1137	1422	1852	2076	2736	3227											
	1000	89	57	87	112	177	222	279	355	505	620	758	948	1235	1384	1824	2151											
	750	67	43	66	84	133	167	210	267	379	465	569	711	926	1038	1368	1614											
12.5	1800	144	82	141	180	256	358	422	572	790	999	1198	1528	1990	2231	2940	3468	3769										
	1500	120	69	118	150	213	299	351	477	658	833	998	1274	1658	1859	2450	2890	3141		4272								
	1000	80	46	79	100	142	199	234	318	439	555	665	849	1105	1239	1633	1927	2094		2848								
	750	60	35	59	75	107	150	176	239	329	417	499	637	829	930	1225	1445	1571		2136								
14	1800	129	81	132	162	245	321	398	513	765	895	1102	1369	1850	1999	2634	3106	3539	3984	4862								
	1500	107	67	109	134	203	266	330	425	635	742	914	1136	1534	1658	2184	2576	2935	3305	4033	4537							
	1000	71	44	73	89	135	177	220	283	423	495	609	757	1023	1105	1456	1717	1957	2203	2676	3010							
	750	54	34	55	67	102	133	165	213	318	371	457	568	767	829	1092	1288	1468	1653	2017	2269							
16	1800	113	78	124	141	234	254	366	421	708	784	991	1176	1680	1822	2366	2721	3253	3644	4496	4993							
	1500	94	64	103	118	194	211	305	350	589	652	824	978	1397	1515	1968	2263	2706	3031	3740	4153							
	1000	63	43	69	79	129	141	203	233	393	435	549	652	931	1010	1312	1509	1804	2021	2506	2783							
	750	47	32	52	59	97	106	153	175	295	326	412	489	699	758	984	1132	1353	1516	1870	2077							
18	1800	100	70	118	131	220	241	354	392	649	727	907	1068	1549	1675	2094	2513	3015	3350	4188	4586							
	1500	83	58	98	109	183	200	294	325	538	604	753	886	1286	1390	1738	2085	2503	2781	3476	3806							
	1000	56	39	65	73	122	133	196	217	359	403	502	591	857	927	1159	1390	1669	1854	2345	2568							
	750	42	29	49	55	92	100	147	163	269	302	377	443	643	695	869	1043	1252	1391	1738	1903							
20	1800	90	63	109	124	204	235	336	370	598	685	854	989	1441	1573	1884	2261	2827	3128	3958	4287							
	1500	75	52	91	103	170	196	280	308	498	570	712	824	1201	1311	1570	1884	2356	2607	3298	3573							
	1000	50	35	61	69	113	131	187	205	332	380	475	549	801	874	1047	1256	1571	1738	2198	2382	3351		4503				
	750	38	26	46	52	85	98	140	154	249	285	356	412	601	656	785	942	1178	1304	1649	1787	2513		3377		4830		
22.4	1800	80	56	97	118	181	221	299	350	531	633	759	904	1281	1449	1675	2010	2513	2890	3518	3937	4691						
	1500	67	47	81	99	152	185	250	293	445	530	636	757	1073	1213	1403	1683	2104	2420	2946	3297							
	1000	45	31	54	66	101	123	167	195	297	353	424	505	715	809	935	1122	1403	1613	1979	2214	2992	3389	4020	4815			
	750	33	24	41	50	76	93	125	147	223	265	318	379	537	607	702	842	1052	1210	1473	1649	2244	2542	3015	3611	4312	4908	
25	1800	72	50	87	116	163	205	269	330	478	582	683	851	1153	1304	1507	1809	2261	2601	3166	3543	4221	4825					
	1500	60	42	72	97	136	170	224	275	398	485	569	709	961	1086	1256	1507	1884	2167	2638	2952							
	1000	40	28	48	65	91	113	149	183	265	323	379	473	641	724	837	1005	1256	1445	1759	1968	2681	3037	3602	4314			
	750	30	21	36	49	68	85	112	138	199	243	285	355	481	543	628	754	942	1084	1319	1476	2010	2277	2702	3236	3864	4398	
28	1800	64	44	77	103	145	182	239	293	425	517	607	757	1025	1159	1340	1608	2010	2312	2814	3149	3752	4289					
	1500	54	37	65	87	122	153	201	247	359	436	512	638	865	978	1130	1357	1696	1950	2374	2657							
	1000	36	25	43	58	81	102	134	165	239	291	341	425	577	652	753	905	1131	1300	1583	1771	2393	2711	3216	3852			
	750	27	19	33	44	61	77	101	124	180	218	256	319	433	489	565	679	848	975	1187	1329	1795	2033	2412	2889	3450	3927	

Forced lubrication required on horizontal gear units

Bevel-helical gear units Thermal Capacities

Type JRHB2..,JRHB3.. Sizes 4–28






Thermal Capacities																												
		Gear unit Sizes																										
i_N		4	5	6	7	8	9	10	11	12	13	14	15	16	17	18	19	20	21	22	23	24	25	26	27	28		
		Themal capacity P_G(in kW)dependent on kind of cooling;P_{G1}:without auxiliary cooling.P_{G2}:fan cooling,P_{G3}:cooling coil,P_{G4}:fan and cooling coil.																										
5	P_{G1}	35.3																										
	P_{G2}	139	184		283		328		478		574		486															
	P_{G3}	159	238		368		459		774		1524		2040															
	P_{G4}	249	366		581		705		1144		2019		2386															
5.6	P_{G1}	38.6																										
	P_{G2}	135	185		274		322		504		646		618		565													
	P_{G3}	154	231		340		424		738		1470		1992		2307													
	P_{G4}	241	359		543		662		1126		2044		2489		2739													
6.3	P_{G1}	40																										
	P_{G2}	132	178	206	259	308	310	345	479	581	633	753	664	684	646													
	P_{G3}	147	215	306	308	449	385	531	651	1120	1295	1613	1847	2019	2155													
	P_{G4}	231	336	456	497	690	612	799	1010	1596	1839	2267	2393	2574	2689													
7.1	P_{G1}	40.6	44	50.6																								
	P_{G2}	125	169	204	248	298	299	336	493	601	676	804	720	754	740	760												
	P_{G3}	135	199	298	284	414	354	488	629	1072	1261	1552	1722	1875	2031	2177												
	P_{G4}	213	313	447	462	642	570	747	996	1556	1848	2261	2331	2505	2666	2817												
8	P_{G1}	39.9	45.1	53.4	53																							
	P_{G2}	117	160	195	236	280	287	321	463	564	646	768	713	775	756	808												
	P_{G3}	124	182	276	263	375	328	444	557	942	1126	1364	1553	1751	1851	2043												
	P_{G4}	198	290	417	430	586	533	686	896	1392	1674	2016	2152	2400	2499	2729												
9	P_{G1}	39.3	45.7	54.4	55.8	61.6	59.6																					
	P_{G2}	111	153	186	226	266	277	306	452	568	640	785	724	759	782	812												
	P_{G3}	115	168	253	246	346	310	409	526	915	1055	1329	1474	1570	1766	1858												
	P_{G4}	183	267	386	407	543	507	637	853	1363	1598	1996	2085	2204	2444	2549												
10	P_{G1}	33.7	44	53.3	55.1	62.3	60.8	63.9																				
	P_{G2}	92.8	140	174	211	251	261	291	429	525	616	734	698	753	770	818												
	P_{G3}	91.9	150	233	224	318	284	377	483	810	978	1176	1347	1490	1642	1772												
	P_{G4}	147	240	356	372	505	465	591	791	1218	1490	1787	1933	2118	2306	2464												
11.2	P_{G1}	33	40.4	52.1	51	61.9	57.7	65.2																				
	P_{G2}	89.8	125	165	188	240	232	279	382	506	555	709	641	721	714	797												
	P_{G3}	87.9	131	213	195	298	246	356	418	764	849	1101	1186	1360	1457	1652												
	P_{G4}	140	210	327	326	474	406	561	688	1156	1306	1688	1722	1960	2068	2315												
12.5	P_{G1}	39.4	50.4	50.1	76.7	61.7	95.4	66.9	112																			
	P_{G2}	84.8	118	151	186	224	250	264	377	481	468	681	602	669	728	749												
	P_{G3}	94.7	151	189	265	272	390	326	542	701	831	1021	1261	1198	1484	1468												
	P_{G4}	131	209	292	362	435	529	515	768	1070	1126	1574	1652	1754	1991	2093												
14	P_{G1}	38.6	49.6	46	75.7	57.4	95.2	63.1	117		127																	
	P_{G2}	82.6	114	135	180	200	244	236	374	428	482	611	598	631	728	792												
	P_{G3}	91.9	146	166	257	238	380	283	533	605	843	884	1217	1280	1443	1569												
	P_{G4}	127	202	255	350	380	514	449	756	931	1147	1377	1603	1688	1947	2110												
16	P_{G1}	36.8	48.3	55.4	72.9	83.3	94.3	103	114	125	122	138																
	P_{G2}	78.6	110	126	172	196	239	262	358	407	445	511	597	615	737	741												
	P_{G3}	87.4	141	157	244	272	369	415	508	662	769	868	1196	1230	1429	1447												
	P_{G4}	121	195	216	334	369	500	558	719	907	1047	1181	1583	1621	1937	1949												
18	P_{G1}	35.9	47.2	54.1	71.1	81.1	92.5	96.3	115	129	128	146																
	P_{G2}	76.4	107	122	167	191	232	243	353	411	454	520	581	617	722	787												
	P_{G3}	84.7	136	150	235	265	357	383	499	665	777	877	1155	1219	1375	1503												
	P_{G4}	117	189	208	322	359	485	514	707	913	1060	1195	1525	1608	1872	2033												
20	P_{G1}	34	45.6	52.6	68.8	78	89.8	100	112	124	126	140																
	P_{G2}	72.1	103	118	161	182	223	251	339	385	428	480	568	599	708	736	839		813									
	P_{G3}	80.1	131	145	225	249	342	392	476	616	729	800	1114	1165	1332	1379												
	P_{G4}	111	181	201	307	340	466	529	676	848	996	1092	1475	1542	1815	1876												
22.4	P_{G1}	33.3	45.1	51.4	67.2	76.7	88.6	93.9	110	128	126	148																
	P_{G2}	70.3	101	115	155	177	218	231	324	388	412	489	559	586	702	722	836	864	824	793								
	P_{G3}	77.9	130	142	218	242	332	360	443	617	683	811	1061	1121	1282	1332												
	P_{G4}	108	180	195	296	330	452	485	632	850	936	1107	1412	1490	1756	1818												
25	P_{G1}	31.9	43.3	50.1	66.2	75.2	86.9	92.8	109	130	128	150	153	160														
	P_{G2}	66.7	96.6	110	151	170	209	223	307	375	395	466	537	585	681	732												
	P_{G3}	73.6	122	135	208	232	310	347	408	590	632	762	970	1078	1181	1294												
	P_{G4}	102	168	186	284	317	422	466	584	817	870	1045	1297	1440	1629	1780												
28	P_{G1}	30.9	42.5	50	64.1	74.4	85	93.1	109	131	131	155	168	172	183	182	200											
	P_{G2}	63.9	93.3	109	143	165	199	220	296	363	380	452	535	562	689	711	828	878	855	869								
	P_{G3}	69.4	116	134	193	225	288	336	382	554	590	715	939	987	1157	1193												
	P_{G4}	96.7	159	185	264	306	395	455	549	767	819	985	1265	1326	1605	1650												

JRHB2 JRHB3

Bevel-helical gear units Nominal Power Ratings

Type JRHB3..,JRHB4.. Sizes 4-28

			Nominal Power Ratings																									
			Gear unit Sizes																									
i_N	n_1	n_2	4	5	6	7	8	9	10	11	12	13	14	15	16	17	18	19	20	21	22	23	24	25	26	27	28
	r/min		Nominal Power Ratings P_N(kW)																									
31.5	1800	57	39	69	92	129	162	213	261	379	460	541	674	913	1032	1193	1432	1790	2059	2506	2805	3342	3819	4774			
	1500	47.6	33	58	77	109	136	179	220	319	388	455	567	769	869	1005	1206	1507	1734	2110	2362						
	1000	31.7	22	39	51	73	91	119	147	213	259	303	378	513	579	670	804	1005	1156	1407	1574	2127	2410	2859	3424		
	750	23.8	17	29	39	55	68	90	110	160	194	228	284	385	435	503	603	754	867	1055	1181	1596	1808	2144	2568	3067	3490
35.5	1800	51	35	61	82	115	145	190	233	339	412	484	603	817	923	1068	1281	1602	1842	2242	2509	2990	3417	4272	4806		
	1500	42.3	29	51	68	95	119	157	192	279	339	412	484	678	817	923	1068	1281	1602	1842	2067						
	1000	28.2	19	34	45	63	79	105	128	186	226	275	323	452	545	615	712	854	1068	1231	1378	1858	2138	2537	3038		
	750	21.1	15	26	34	48	60	79	96	140	170	206	242	339	409	462	534	641	801	924	1034	1394	1604	1903	2279	2721	3097
40	1800	45	31	54	73	102	128	168	206	299	363	427	532	720	815	942	1130	1413	1625	1979	2214	2638	3015	3769	4240		
	1500	37.5	26	46	61	86	108	142	174	252	307	360	449	608	688	795	954	1193	1372	1671	1870						
	1000	25.0	17	31	41	57	72	95	116	168	205	240	299	405	459	530	636	795	915	1099	1230	1649	1832	2251	2696		
	750	18.8	13	23	31	43	54	71	87	126	154	180	225	304	344	398	477	597	686	836	935	1237	1374	1688	2022	2415	2749
45	1800	40	28	48	64	90	113	149	183	265	323	379	473	640	724	837	1005	1256	1445	1759	1968	2345	2680	3350	3769		
	1500	33.3	23	40	53	74	93	123	151	219	266	313	390	528	597	691	829	1036	1192	1451	1624						
	1000	22.2	15	27	35	49	62	82	101	146	177	209	260	352	398	461	553	691	795	967	1082	1466	1629	2001	2397	2862	
	750	16.7	12	20	27	37	47	62	76	110	133	157	195	264	299	346	415	518	596	726	812	1099	1222	1501	1798	2147	2443
50	1800	36	25	43	58	81	102	134	165	239	291	341	425	576	652	753	904	1130	1300	1583	1771	2110	2412	3015	3392		
	1500	30.0	21	36	48	68	85	112	137	199	242	284	354	480	543	628	753	942	1083	1319	1476						
	1000	20.0	14	24	32	45	57	75	91	133	161	189	236	320	362	419	502	628	722	879	984	1319	1466	1801	2157	2576	2932
	750	15.0	11	18	24	34	43	56	69	100	121	142	177	240	272	314	377	471	542	660	738	990	1099	1351	1618	1932	2199
56	1800	32	22	38	51	72	91	119	146	212	258	303	378	512	579	670	804	1005	1156	1407	1574	1876	2144	2680	3015		
	1500	26.8	18	32	43	61	76	100	123	179	218	256	319	432	489	565	678	848	975	1187	1328						
	1000	17.9	12	21	29	41	51	67	82	119	145	171	213	288	326	377	452	565	650	787	880	1178	1309	1608	1926	2300	2618
	750	13.4	9	16	22	31	38	50	62	90	109	128	160	216	245	283	339	424	488	594	664	884	982	1206	1444	1725	1963
63	1800	29	20	34	47	64	82	108	133	192	234	275	343	464	525	607	728	910	1047	1275	1427	1700	1943	2429	2732		
	1500	23.8	16	28	38	53	68	89	110	159	194	227	283	384	434	502	603	753	867	1055	1181						
	1000	15.9	10	19	25	35	45	59	73	106	129	151	189	256	289	335	402	502	578	699	782	1047	1163	1429	1712	2044	2327
	750	11.9	8	14	19	27	34	45	55	80	97	114	142	192	217	251	302	377	434	528	591	785	873	1072	1284	1533	1745
71	1800	25	17	28	40	52	71	89	114	157	202	237	295	400	452	523	628	785	903	1099	1230	1465	1675	2094	2356		
	1500	21.1	14	24	34	43	59	74	96	131	169	199	248	336	380	439	527	659	758	923	1033						
	1000	14.1	10	16	23	29	39	49	64	87	113	133	165	224	253	293	351	439	505	620	693	929	1032	1180	1519	1696	2065
	750	10.6	7	12	17	22	30	37	48	66	85	100	124	168	190	220	264	330	379	462	517	697	774	885	1139	1272	1549
80	1800	23		27	33	52	64	85	105	148	185	218	272	368	416	481	578	722	830	1011	1131	1348	1541	1926	2167		
	1500	18.8		22	27	42	52	70	86	121	151	178	222	301	340	393	472	590	679	826	925	1257		1649			
	1000	12.5		15	18	28	35	47	57	81	101	119	148	201	227	262	315	393	453	549	615	838	916	1099	1191	1603	1715
	750	9.4		11	14	21	26	35	43	61	76	89	111	151	170	197	236	295	340	413	463	628	687	825	893	1203	1286
90	1800	20		24	29	45	52	74	90	129	157	189	236	320	362	418	502	628	722	879	984	1172	1340	1675	1884		
	1500	16.7		20	24	37	44	62	75	107	131	158	197	267	302	349	419	524	603	734	821	1117	1265	1483	1675		
	1000	11.1		13	16	25	29	41	50	71	87	105	131	178	201	233	279	349	402	488	546	745	844	989	1117	1425	1629
	750	8.3		10	12	19	22	31	38	54	66	79	99	134	151	175	210	262	302	367	411	558	633	742	838	1069	1222
100	1800	18		21	29	40	51	67	83	116	147	170	212	288	326	376	452	565	650	791	885	1055	1206	1507	1696		
	1500	15.0		18	24	34	42	56	69	96	122	142	177	240	271	314	376	471	541	659	738	1005	1139	1351	1524		
	1000	10.0		12	16	23	28	37	46	64	81	95	118	160	181	209	251	314	361	439	492	670	759	901	1016	1277	1466
	750	7.5		9	12	17	21	28	35	48	61	71	89	120	136	157	188	236	271	330	369	503	569	675	762	958	1099
112	1800	16.1		19	26	36	45	60	74	103	131	152	190	257	291	337	404	505	581	708	792	944	1078	1348	1517		
	1500	13.4		16	21	30	38	50	62	86	109	127	158	214	242	280	336	420	484	589	659	898	1017	1206	1388		
	1000	8.9		11	14	20	25	33	41	57	73	85	105	143	161	187	224	280	323	391	438	598	678	804	926	1141	1309
	750	6.7		8	11	15	19	25	31	43	55	64	79	107	121	140	168	210	242	295	330	449	508	603	694	855	982
125	1800	14.4		17	23	32	41	53	66	92	117	136	170	230	260	301	361	452	520	633	708	844	965	1206	1357		
	1500	12.0		14	19	27	34	44	55	77	98	113	141	192	217	251	301	376	433	527	590	804	911	1081	1244		
	1000	8.0		9	13	18	23	29	37	51	65	75	94	128	145	167	201	251	289	351	393	536	607	720	825	1018	1173
	750	6.0		7	10	14	17	22	28	39	49	57	71	96	109	126	151	188	217	264	295	402	455	540	622	763	880
140	1800	12.9		15	20	29	36	48	59	83	105	122	152	206	233	270	324	405	466	567	634	756	864	1080	1215		
	1500	10.7		12	17	24	30	39	49	69	87	101	126	171	193	224	268	336	386	470	526	718	813	965	1133		
	1000	7.1		8	11	16	20	26	33	46	58	67	84	114	129	149	179	224	257	312	349	479	542	643	755	909	1047
	750	5.4		6	9	12	15	20	25	35	44	51	63	86	97	112	134	168	193	235	263	359	407	482	567	682	785
160	1800	11.3		13	18	25	32	42	52	72	92	107	133	181	204	236	283	354	408	496	556	662	757	946	1064		
	1500	9.4		11	15	21	26	35	43	60	76	89	111	150	170	196	236	295	339	413	462	628	712	844	991		
	1000	6.3		7	10	14	17	23	29	40	51	59	74	100	113	131	157	197	226	277	310	419	474	563	661	792	916
	750	4.7		6	8	11	13	18	22	30	38	45	56	75	85	98	118	148	170	207	231	314	356	422	496	594	687
180	1800	10		12	16	22	28	37	46	64	81	94	118	160	181	209	251	314	361	439	492	586	670	837	942		
	1500	8.3		10	13	18	23	31	38	53	67	78	98	132	150	173	208	260	299	365	408	558	633	750	899	1056	
	1000	5.6		7	9	12	15	21	25	35	45	52	65	88	100	115	139	173	199	246	275	372	422	500	599	704	814
	750	4.2		5	7	9	12	16	19	27	34	39	49	66	75	87	104	130	150	183	204	279	316	375	449	528	611
200	1800	9		10	14	20	25	33	41	58	73	85	106	144	163	188	226	282	325	395	442	527	603	753	848		
	1500	7.5		9.1	12	17	21	28	34	48	61	71	88	120	135	157	188	235	270	329	369	503	569	675	809	946	1099
	1000	5.0		6.1	8	11	14	19	23	32	41	47	59	80	90	105	125	157	180	219	246	335	380	450	539	631	733
	750	3.8		4.6	6	9	11	14	17	24	31	36	44	60	68	79	94	118	135	165	185	251	285	338	404	473	550
224	1800	8		9.7	12	18	22	29	37	51	65	75	94	128	144	167	201	251	289	351	393	469	536	670	753		
	1500	6.7		8.1	10	15	19	25	31	43	54	63	79	107	121	140	168	210	242	294	329	449	508	603	722	845	982
	1000	4.5		5.4	7	10	13	17	21	29	36	42	53	71	81	93	112	140	161	197	221	299	339	402	481	563	654
	750	3.3		4.1	5	8	10	13	16	22	27	32	40	54	61	70	84	105	121	147	165	224	254	302	361	422	491
250	1800	7.2		8.7	11	16	20	26	33	46	58	68	85	115	130	150	180	226	260	316	354	422	482	603	678		
	1500	6.0		7.2	10	13	17	22	27	38	49	56	70	96	108	125	150	188	216	263	295	396	455	540	647	754	880
	1000	4.0		4.8	6	9	11	15	18	25	33	37	47	64	72	83	100	125	144	175	196	264	304	360	431	503	586
	750	3.0		3.6	5	7	9	11	14	19	25	28	35	48	54	63	75	94	108	132	148	198	228	270	324	377	440
280	1800	6.4		7.7	10	14	18	23	29	41	52	60	75	102	115	134	160	201	231	281	314	375	428	536	603		
	1500	5.4		6.5	8.7	12	15	19	24	34	44	51	63	86	97	113	135	169	195	237	265	342	398	482	578	673	785
	1000	3.6		4.3	5.8	8	10	13	16	23	29	34	42	57	65	75	90	113	130	158	177	228	266	322	385	449	524
	750	2.7		3.3	4.4	6	8	10	12	17	22	26	32	43	49	57	68	85	98	119	133	171	199	241	289	337	393
315	1800	5.7		6.6	9.2	12	16	20	26	35	46	54	67	91	103	119	143	179	205	250	280	334	381	477	537		
	1500	4.8		5.6	7.7	10	13	17	22	30	39	45	56	76	86	100	120	150	173	211	236	292	344	399	514	573	698
	1000	3.2		3.7	5.1	7	9	11	15	20	26	30	37	51	57	67	80	100	115	140	157	194	229	266	342	382	465
	750	2.4		2.8	3.9	5	7	9	11	15	20	23	28	38	43	50	60	75	87	106	118	146	172	199	257	287	349
355	1800	5.1			8.2		14		23		41		60		92		128		184		250		341		480		
	1500	4.2			6.8		11		19		34		49		76		105		151		206		292		403		580
	1000	2.8			4.5		7		13		23		33		51		70		101		137		195		268		386
	750	2.1			3.4		6		10		17		25		38		53		76		103		146		201		290
400	1800	4.5			6.8		12		20		35		53														
	1500	3.8			5.7		10		17		29		44														
	1000	2.5			3.8		7		11		19		29														
	750	1.9			2.9		5		9		15		22														

Forced lubrication required on horizontal gear units

Bevel-helical gear units Thermal Capacities

Type JRHB3..,JRHB4.. Sizes 4–28






Thermal Capacities																											
		Gear unit Sizes																									
i_N		4	5	6	7	8	9	10	11	12	13	14	15	16	17	18	19	20	21	22	23	24	25	26	27	28
		Themal capacity P_G(in kW)dependent on kind of cooling;P_{G1}:without auxiliary cooling.P_{G2}:fan cooling,P_{G3}:cooling coil,P_{G4}:fan and cooling coil.																								
31.5	P_{G1}	29.4	40.7	47.8	61.7	72.7	82.7	90.7	106	129	131	154	170	183	190	199	216	227								
	P_{G2}	60.7	88.5	103	136	160	190	210	282	344	365	430	508	558	658	712	799	863	831	871						
	P_{G3}	65.2	108	126	180	215	271	312	356	508	550	658	857	952	1067	1165										
	P_{G4}	90.8	149	175	247	292	370	424	514	709	766	912	1162	1288	1487	1620										
35.5	P_{G1}	27.8	38.6	46.4	59.1	69.8	79.6	87.7	105	125	130	151	173	181	196	203	228	235								
	P_{G2}	56.8	83	99.8	129	152	181	199	271	328	353	412	495	526	644	677	786	825	821	839						
	P_{G3}	59.9	99.3	119	167	200	248	292	338	475	524	615	819	871	1021	1071										
	P_{G4}	83.7	138	166	229	272	341	396	487	661	732	855	1114	1181	1429	1498										
40	P_{G1}	24.3	33.7	44.3	52	67.1	75	84.4	100	121	125	147	168	180	194	204	226	240	208							
	P_{G2}	49.4	71.6	94.6	112	144	168	191	255	310	334	392	469	510	614	657	747	805	783	822						
	P_{G3}	50.5	82.7	111	138	187	224	274	310	440	484	574	758	829	954	1022										
	P_{G4}	70.6	115	155	191	254	309	372	449	616	678	798	1035	1129	1339	1434										
45	P_{G1}	23.8	32.9	41.8	50.8	64	69.4	80.8	93.2	118	117	144	160	176	187	203	221	240	207	206						
	P_{G2}	48.3	69.8	88.5	108	137	154	180	234	298	306	377	434	484	572	629	700	765	733	785						
	P_{G3}	49	79.7	102	133	172	202	251	280	417	435	544	684	768	868	960										
	P_{G4}	68.7	111	142	183	236	279	342	407	585	607	760	936	1049	1221	1346										
50	P_{G1}	24.2	33	36.8	50.7	56.9	69.3	77	95.8	115	124	142	174	174	210	204	240	247	260	232						
	P_{G2}	48.7	69.2	76.9	106	119	151	169	232	281	310	358	445	453	593	594	690	730	799	757						
	P_{G3}	49.1	77.7	85.8	129	144	194	228	274	384	433	506	692	696	884	880										
	P_{G4}	68.5	108	119	177	197	269	312	396	539	610	709	944	956	1242	1240										
56	P_{G1}	22.4	30.7	36.2	47.5	55.7	64.8	72	88.9	108	117	135	167	186	203	225	245	260	271	279						
	P_{G2}	44.8	64	75.1	99.5	116	140	155	211	260	285	330	411	461	552	612	675	712	772	818						
	P_{G3}	44.2	70.1	82.9	117	138	174	206	243	345	389	451	622	702	800	891										
	P_{G4}	62.1	98.3	115	162	190	241	281	354	488	547	637	852	962	1128	1255										
63	P_{G1}	21.6	29.5	36	46.1	55.2	62.8	71	86.3	108	114	138	162	173	199	211	243	256	272	275						
	P_{G2}	43.2	61.6	74.2	96.2	114	135	151	203	255	275	332	393	422	529	563	654	689	752	776						
	P_{G3}	41.9	66.2	80.8	111	134	164	197	229	335	366	451	585	627	755	805										
	P_{G4}	58.9	93	112	154	185	229	269	334	471	517	633	802	862	1071	1133										
71	P_{G1}	20	28.2	33.3	43.9	51.4	59	65.9	80.2	99.9	107	127	155	167	190	205	232	251	261	273						
	P_{G2}	40	58.5	68.4	91.7	106	126	140	189	232	258	302	372	404	498	539	615	666	707	754						
	P_{G3}	38	61.3	73	103	122	148	177	206	297	331	404	538	591	698	760										
	P_{G4}	53.7	86.5	102	143	168	209	243	301	421	469	567	743	813	990	1075										
80	P_{G1}		31.7	31.9	46.9	49.7	66.1	63.8	98.6	95.8	130	123	171	161	189	196	256	240	343	262						
	P_{G2}			65.9		102		136		224		291		384		507		626		710						
	P_{G3}			68.8		115		167		278		379		544		700										
	P_{G4}			96.7		160		231		396		536		751		994										
90	P_{G1}		31.1	30.5	45.5	47.4	64.7	60	95.9	89.6	128	115	164	175	183	195	248	264	337	345						
	P_{G2}			62.7		97.6		127		208		273														
	P_{G3}			63.8		107		151		249		343														
	P_{G4}			90.1		149		210		357		487														
100	P_{G1}		29.6	34	43.1	50.2	61.5	66.7	92.4	110	121	140	156	169	173	188	236	255	321	339						
112	P_{G1}		28.6	33.3	41.5	48.8	59.2	65.3	88.3	106	116	137	149	161	167	179	227	243	315	323						
125	P_{G1}		27.4	31.8	39.7	46.2	56.6	62.1	84.8	102	112	130	143	155	159	172	218	234	300	318						
140	P_{G1}		26.1	30.7	37.8	44.6	53.5	59.9	80.4	97.8	107	125	139	148	155	165	211	225	294	304						
160	P_{G1}		24.1	29.4	34.5	42.7	49	57.2	73.6	94.1	101	121	132	143	147	160	202	218	281	298						
180	P_{G1}		23.6	28.1	33.7	40.7	47.9	54.3	71.8	89.3	96.5	114	125	136	140	152	190	208	266	286						
200	P_{G1}		22.8	25.9	33.5	37.2	47	49.8	70.5	81.9	94.7	109	124	130	139	146	191	196	260	271						
224	P_{G1}		21.3	25.4	31.2	36.4	44	48.6	66.5	80.2	89.1	104	117	128	130	144	181	198	246	266						
250	P_{G1}		20.8	24.5	30.2	36	42.5	47.8	64.5	78.6	86.6	101	114	120	127	136	176	187	241	252						
280	P_{G1}		19.8	22.9	28.4	33.7	40.6	44.8	61.8	74	82.1	95.9	106	117	120	132	167	182	233	247						
315	P_{G1}		18.6	22.3	26.6	32.4	38.2	43.2	57.8	71.6	78.4	92.7	100	110	113	124	158	172	217	236						
355	P_{G1}			21.3		30.4		41.2		68.4		87.6		103		117		162		220						
400	P_{G1}			19.9		28.6		38.9		63.8		83.4														

Helical gear units Nominal Output Torques
Type JRHH1..,JRHH2..,JRHH3..,JRHH4..
Sizes 3–28

Nominal ratio i_N, Nominal Output Torques T_{2N}																											
i_N	Gear unit Sizes																										
	3	4	5	6	7	8	9	10	11	12	13	14	15	16	17	18	19	20	21	22	23	24	25	26	27	28	
	Nominal Output Torques T_{2N} (kNm)																										
1.25	2.9		7.8		15.2		24.7																				
1.4	3.1		8.2		15.9		25.6																				
1.6	3.3		8.6		16.3		27.1		46		67.4																
1.8	2.7		8.8		17.4		28		47.6		70.9																
2	2.8		9.4		17.8		28.7		49.1		72.9		129														
2.24	2.8		9.6		17.8		28.7		50.6		75.3		130														
2.5	2.9		9.6		17.8		28.7		50.6		77		117														
2.8	3.1		9.6		17.1		27.2		50.6		77		120		171												
3.15	3.1		9.6		17.4		28.1		48.1		73.1		124		173												
3.55	3.2		9.5		17.8		28.6		50.2		74.4		126		173												
4	3.2		9.6		17.8		28.7		50.6		75.7		130		173		245										
4.5	2.5	6.3	7.7		15.8		24.6		46		61.6		109		146		216										
5	2.4	6.3	7.2		13.8		23.5		38.7		58.3		95		124		174										
5.6	2.3	6.3	6.9		13.1		20.1		36.5		55.4		90.4		118		150										
6.3	3.3	6.3	10.7		20.3		33.7		59.3		86		143		195		292				500		800				
7.1	3.3	6.5	11.2		20.3		33.7		59.3		86		143	160	195	230	292	335	410		520	565	825	910			
8	3.3	6.7	11.2	13.5	20.3	25.6	33.7	42.2	59.3	73.8	86	107	143	160	195	230	292	335	410	458	540	585	860	940	1055		
9	3.3	6.7	11.2	14.4	20.3	25.6	33.7	42.2	59.3	73.8	86	107	143	160	195	230	292	335	410	458	555	610	860	985	1085	1205	
10	3.3	6.3	10.5	14.4	20.3	25.6	33.7	42.2	59.3	73.8	86	107	143	160	195	230	292	335	410	458	575	625	860	1020	1130	1240	
11.2	3.3	6.3	10.6	14.4	20.3	25.6	33.7	42.2	59.3	73.8	86	107	143	160	195	230	292	335	410	458	575	645	860	1030	1175	1285	
12.5	3.3	6.7	11.2	13.5	20.3	25.6	33.7	42.2	59.3	73.8	86	107	143	160	195	230	292	335	410	458	600	650	860	1030	1210	1340	
14	3.3	6.7	11.2	13.5	20.3	25.6	33.7	42.2	59.3	73.8	86	107	143	160	195	230	292	335	410	458	620	675	860	1030	1230	1375	
16	3.3	6.7	11.2	14.4	20.3	25.5	33.7	42.2	59.3	73.8	86	107	143	160	195	230	292	335	410	458	640	695	860	1030	1230	1400	
18	3.3	6.3	10.5	14.4	19	25.6	33.7	42.2	59.3	73.8	86	107	143	160	195	230	292	335	410	458	640	725	860	1030	1230	1400	
20	3.3	6.6	11.2	14.4	19	25.6	33.7	42.2	59.3	73.8	86	107	143	160	195	230	292	335	410	458	585	725	800	1030	1150	1400	
22.4	3.3	6.3	10.9	13.5	19.8	24	33.1	42.2	58.3	73.8	88	107	153	160	200	230	300	335	410	458	600	660	860	910	1230	1310	
25			11.6	14.3	21.7	24	35.7	42.2	63.5	73.8	88	107	153	173	200	240	300	335	420	458	620	675	860	1030	1230	1400	
28			11.6	13.9	21.7	25	35.7	41.6	63.5	72.5	88	109	153	173	200	240	300	345	420	470	640	700	860	1030	1230	1400	
31.5			11.6	15.5	21.7	27.2	35.7	43.8	63.5	77.2	88	109	153	173	200	240	300	345	420	470	640	725	860	1030	1230	1400	
35.5			11.6	15.5	21.7	27.2	35.7	43.8	63.5	77.2	88	109	153	173	200	240	300	345	420	470	640	725	860	1030	1230	1400	
40			11.6	15.5	21.7	27.2	35.7	43.8	63.5	77.2	88	109	153	173	200	240	300	345	420	470	640	725	860	1030	1230	1400	
45			11.6	15.5	21.7	27.2	35.7	43.8	63.5	77.2	88	109	153	173	200	240	300	345	420	470	640	725	860	1030	1230	1400	
50			11.6	15.5	21.7	27.2	35.7	43.8	63.5	77.2	88	109	153	173	200	240	300	345	420	470	640	725	860	1030	1230	1400	
56			11.6	15.5	21.7	27.2	35.7	43.8	63.5	77.2	88	109	153	173	200	240	300	345	420	470	640	725	860	1030	1230	1400	
63			11.6	15.5	21.7	27.2	35.7	43.8	63.5	77.2	88	109	153	173	200	240	300	345	420	470	640	725	860	1030	1230	1400	
71			11.6	15.5	21.7	27.2	35.7	43.8	63.5	77.2	88	109	153	173	200	240	300	345	420	470	640	725	860	1030	1230	1400	
80			11.6	15.5	21.7	27.2	35.7	43.8	63.5	77.2	88	109	153	173	200	240	300	345	420	470	640	725	860	1030	1230	1400	
90			11.6	15.5	20	27.2	34.5	43.8	61.6	77.2	88	109	153	173	200	240	290	345	410	470	585	725	800	1030	1150	1400	
100				14.5	21.7	27.2	35.7	43.8	61.6	77.2	90.7	109	153	173	200	226	300	345	420	465	640	660	860	910	1230	1310	
112				15	21.7	25.2	35.7	42.8	61.6	77.2	90.7	109	153	173	200	240	300	345	420	470	640	725	860	1030	1230	1400	
125					21.7	27.2	35.7	44.2	61.6	78	90.7	113	153	173	200	240	300	345	420	470	640	725	860	1030	1230	1400	
140					21.7	27.2	35.7	44.2	61.6	78	90.7	113	153	173	200	240	300	345	420	470	640	725	860	1030	1230	1400	
160					21.7	27.2	35.7	44.2	61.6	78	90.7	113	153	173	200	240	300	345	420	470	640	725	860	1030	1230	1400	
180					21.7	27.2	35.7	44.2	61.6	78	90.7	113	153	173	200	240	300	345	420	470	640	725	860	1030	1230	1400	
200					21.7	27.2	35.7	44.2	61.6	78	90.7	113	153	173	200	240	300	345	420	470	640	725	860	1030	1230	1400	
224					21.7	27.2	35.7	44.2	61.6	78	90.7	113	153	173	200	240	300	345	420	470	640	725	860	1030	1230	1400	
250					21.7	27.2	35.7	44.2	61.6	78	90.7	113	153	173	200	240	300	345	420	470	640	725	860	1030	1230	1400	
280					21.7	27.2	35.7	44.2	61.6	78	90.7	113	153	173	200	240	300	345	420	470	640	725	860	1030	1230	1400	
315					21.7	27.2	35.7	44.2	61.6	78	90.7	113	153	173	200	240	300	345	420	470	640	725	860	1030	1230	1400	
355					19.6	27.2	35.7	44.2	61.6	78	90.7	113	140	173	192	240	290	345	410	470	585	725	800	1030	1150	1400	
400						27.2		44.2		78		113		158		223		335		465		660		910		1310	
450						25.3		42.8		78		113															

Bevel-helical gear units Nominal Output Torques
Type JRHH2..,JRHH3.. Sizes 4-28






Nominal ratio i_N, Nominal Output Torques T_{2N}																									
i_N	Gear unit Sizes																								
	4	5	6	7	8	9	10	11	12	13	14	15	16	17	18	19	20	21	22	23	24	25	26	27	28
	Nominal Output Torques T_{2N} (kNm)																								
5	6.1	9.4		19		29.9		46		68.6		122													
5.6	6.2	9.4		19		29.9		48.1		69.6		122	135	195											
6.3	6.2	9.4	12	19	23.8	29.9	38	50.2	58.8	73.8	85.2	130	141	195											
7.1	6.2	9.4	12	19	23.8	29.9	38	52.4	60.9	75.9	87.3	132	145	195	230										
8	6.2	9.4	12	19	23.8	29.9	38	54	63.1	80	91.5	132	148	195	230										
9	6.2	9.4	12	19	23.8	29.9	38	54	65.2	81.1	94	132	148	195	230										
10	6.2	9.4	12	19	23.8	29.9	38	54	66.3	81.1	98.8	132	148	195	230										
11.2	6.2	9.4	12	19	23.8	29.9	38	54	66.3	81.1	101	132	148	195	230										
12.5	5.5	9.4	12	17	23.8	28	38	52.4	66.3	79.5	101	137	148	195	230	250		340							
14	6	9.8	12	18.2	23.8	29.5	38	56.7	66.3	81.6	101	142	148	195	230	262	295	360	405						
16	6.6	10.5	12	19.8	21.5	31	35.6	59.9	66.3	83.8	99.4	148	154	200	230	275	308	380	422						
18	6.7	11.3	12.6	21.1	23.1	33.9	37.5	62	69.5	86.7	102	153	160	200	240	288	320	400	438						
20	6.7	11.6	13.2	21.7	25	35.7	39.3	63.5	72.7	90.7	105	153	167	200	240	300	332	420	455	640		860		1230	
22.4	6.7	11.6	14.2	21.7	26.5	35.7	41.8	63.5	75.6	90.7	108	153	173	200	240	300	345	420	470	640	725	860	1030	1230	1400
25	6.7	11.6	15.5	21.7	27.2	35.7	43.8	63.5	77.2	90.7	113	153	173	200	240	300	345	420	470	640	725	860	1030	1230	1400
28	6.7	11.6	15.5	21.7	27.2	35.7	43.8	63.5	77.2	90.7	113	153	173	200	240	300	345	420	470	640	725	860	1030	1230	1400
31.5	6.7	11.6	15.5	21.7	27.2	35.7	43.8	63.5	77.2	90.7	113	153	173	200	240	300	345	420	470	640	725	860	1030	1230	1400
35.5	6.7	11.6	15.5	21.7	27.2	35.7	43.8	63.5	77.2	90.7	113	153	173	200	240	300	345	420	470	630	725	860	1030	1230	1400
40	6.7	11.6	15.5	21.7	27.2	35.7	43.8	63.5	77.2	90.7	113	153	173	200	240	300	345	420	470	630	700	860	1030	1230	1400
45	6.7	11.6	15.5	21.7	27.2	35.7	43.8	63.5	77.2	90.7	113	153	173	200	240	300	345	420	470	630	700	860	1030	1230	1400
50	6.7	11.6	15.5	21.7	27.2	35.7	43.8	63.5	77.2	90.7	113	153	173	200	240	300	345	420	470	630	700	860	1030	1230	1400
56	6.7	11.6	15.5	21.7	27.2	35.7	43.8	63.5	77.2	90.7	113	153	173	200	240	300	345	420	470	630	700	860	1030	1230	1400
63	6.6	11.4	15.5	21.4	27.2	35.7	43.8	63.5	77.2	90.7	113	153	173	200	240	300	345	420	470	630	700	860	1030	1230	1400
71	6.6	11	15.5	20	27.2	34	43.8	60	77.2	90.7	113	153	173	200	240	300	345	420	470	630	700	800	1030	1150	1400
80		11.6	14	21.7	26.9	35.7	43.8	61.6	77.2	90.7	113	153	173	200	240	300	345	420	470	640	700	840	910	1225	1310
90		11.6	14	21.7	25.2	35.7	43	61.6	75	90.7	113	153	173	200	240	300	345	420	470	640	725	850	960	1225	1400
100		11.6	15.5	21.7	27.2	35.7	44.2	61.6	78	90.7	113	153	173	200	240	300	345	420	470	640	725	860	970	1220	1400
112		11.6	15.5	21.7	27.2	35.7	44.2	61.6	78	90.7	113	153	173	200	240	300	345	420	470	640	725	860	990	1220	1400
125		11.6	15.5	21.7	27.2	35.7	44.2	61.6	78	90.7	113	153	173	200	240	300	345	420	470	640	725	860	990	1215	1400
140		11.6	15.5	21.7	27.2	35.7	44.2	61.6	78	90.7	113	153	173	200	240	300	345	420	470	640	725	860	1030	1215	1400
160		11.6	15.5	21.7	27.2	35.7	44.2	61.6	78	90.7	113	153	173	200	240	300	345	420	470	640	725	860	1030	1210	1400
180		11.6	15.5	21.7	27.2	35.7	44.2	61.6	78	90.7	113	153	173	200	240	300	345	420	470	640	725	860	1030	1210	1400
200		11.6	15.5	21.7	27.2	35.7	44.2	61.6	78	90.7	113	153	173	200	240	300	345	420	470	640	725	860	1030	1205	1400
224		11.6	15.5	21.7	27.2	35.7	44.2	61.6	78	90.7	113	153	173	200	240	300	345	420	470	640	725	860	1030	1205	1400
250		11.6	15.5	21.7	27.2	35.7	44.2	61.6	78	90.7	113	153	173	200	240	300	345	420	470	630	725	860	1030	1200	1400
280		11.6	15.5	21.7	27.2	35.3	44.2	61.6	78	90.7	113	153	173	200	240	300	345	420	470	610	710	860	1030	1200	1400
315		11.2	15.5	20.5	27.2	34	44.2	60	78	90.7	113	153	173	200	240	300	345	420	470	585	690	800	1030	1150	1400
355			15.5		26.5		44.2		78		113		173		240		345		470		660		910		1310
400			14.5		25.5		43		75		113														

Industrial Gear Units Permissible Additional Radial Forces on Output Shaft d2 1)

Type JRHH1SH,JRHH2S., JRHH3S.,
JRHH4S.,JRHB2S.,JRHB3S.,JRHB4S.

Application of force on centre of shaft end

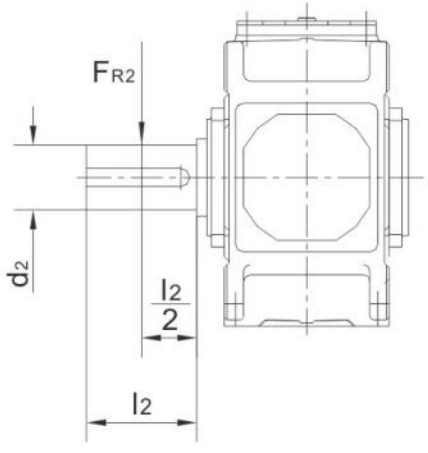

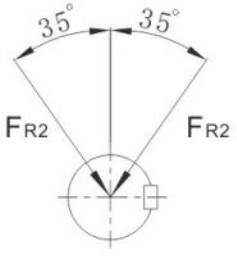

Permissible direction of force

Permissible additional radial forces F_{R2} in kN with application of force on centre of shaft end[3)]

Type	Design	Gear unit sizes 1),4)															
		3	4	5	6	7	8	9	10	11	12	13	14	15	16	17	18
JRHH1SH	A/B	2)	–	2)	-	2)	-	2)	-	2)	-	2)	-	2)		2)	
JRHH2S.	A/B/G/H	-	10	22	22	30	30	30	45	64	64	150	150	140	205	205	205
	C/D	-	10	13	13	18	18	10	28	35	35	112	112	85	135	135	135
JRHH3S.	A/B/G/H	-	10	29	29	40	40	40	60	85	85	190	190	185	265	265	265
	C/D	-	-	18	18	26	26	18	40	50	50	150	150	120	185	185	190
JRHH4S.	A/B	-	-	-	-	26	26	18	40	50	50	150	150	120	185	185	190
	C/D	-	-	-	-	40	40	40	60	85	85	190	190	185	265	265	265
JRHB2S.	A/C	-	13	27	27	37	37	38	55	78	78	160	160	150	210	210	210
	B/D	-	12	15	15	17	17	10	30	35	38	110	110	75	145	100	100
JRHB3S.	A/C	-	12	29	29	40	40	40	60	85	85	190	190	185	265	265	265
	B/D	-	14	18	18	26	26	18	40	50	50	150	150	120	185	185	190
JRHB4S.	A/C	-	9	29	29	40	40	40	60	85	85	190	190	185	265	265	265
	B/D	-		18	18	26	26	18	40	50	50	150	150	120	185	185	190

1)Values in tables are minimum values.If the angle of application of force and the direction of rotation are give, significandtly higher additional forces can mostly be allowed.Please refer to JIE.

2)On request

3)For application of force outside the centre of the shaft end,see page 37.

4)Use foundation bolts of min.property class 8.8.Foundation must be dry and gerase–free.Please refer to JIE. Permissile additional radial forces on input shaft d1.

Industrial Gear Units Permissible Additional Radial Forces on Output Shaft d2 1)

Type JRHH1SH,JRHH2S.， JRHH3S.,JRHH4S.,

JRHB2S.,JRHB3S.,JRHB4S.

Application of force on outside the centre of the shaft end

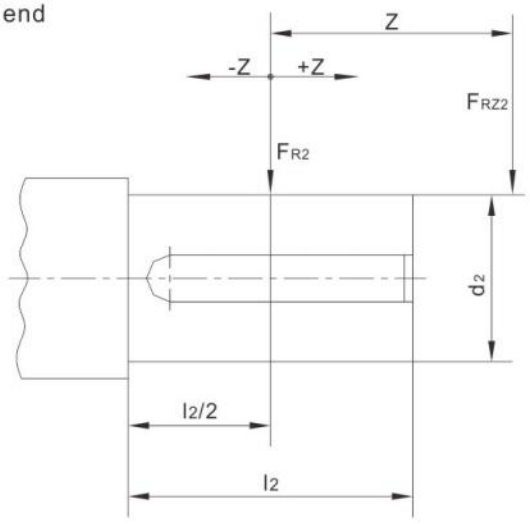

$F_{RZ2} = F_{R2} \times K$

F_{RZ2} Permissible external radial force

F_{R2} Permissible additional radial force acc.to table page 36.

K Factor of application of force acc. to table

Factor of application of force k															
Size	Distance Z (mm)														
	-200	-150	-100	-75	-50	-25	0	25	50	75	100	150	200	250	300
3					1.21	1.09	1.00	0.85	0.74	0.65	0.58	0.48			
4					1.17	1.08	1.00	0.86	0.74	0.68	0.62	0.52	0.44		
5+6				1.22	1.14	1.06	1.00	0.88	0.79	0.72	0.66	0.56	0.49	0.43	
7+8				1.19	1.12	1.06	1.00	0.89	0.81	0.74	0.68	0.58	0.51	0.46	0.41
9+10			1.22	1.15	1.10	1.05	1.00	0.90	0.82	0.76	0.70	0.61	0.54	0.48	0.44
11+12			1.18	1.13	1.08	1.04	1.00	0.91	0.84	0.78	0.73	0.64	0.57	0.51	0.47
13+14		1.24	1.15	1.11	1.07	1.03	1.00	0.92	0.86	0.80	0.75	0.67	0.60	0.55	0.50
15+16		1.20	1.12	1.09	1.06	1.03	1.00	0.93	0.87	0.82	0.77	0.69	0.63	0.58	0.53
17+18	1.25	1.17	1.11	1.08	1.05	1.03	1.00	0.94	0.88	0.84	0.79	0.72	0.66	0.60	0.56

七. Product Dimension

Helical gear units
Single Stage Horizontal
Type JRHH1SH Sizes 3-19

JRHH1SH

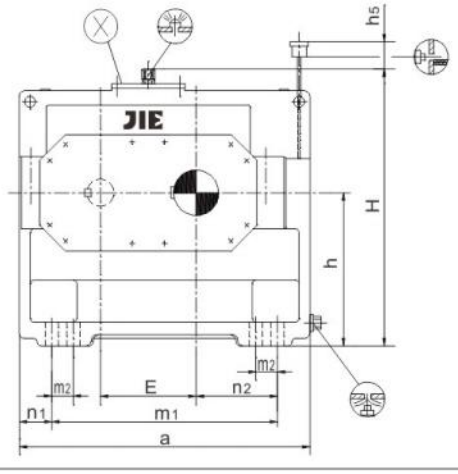

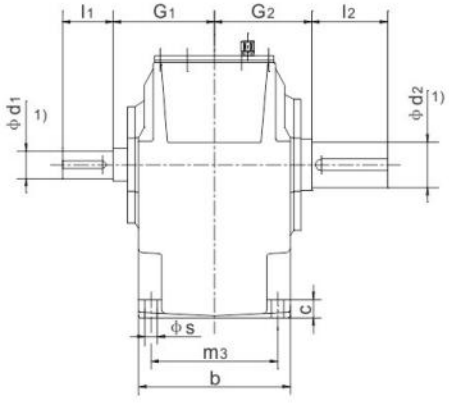

JRHH1SH Sizes 3-11
With Fan

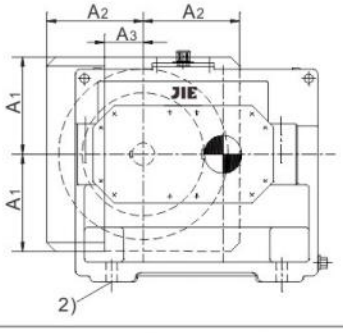

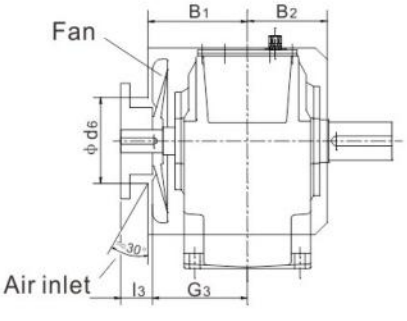

Design

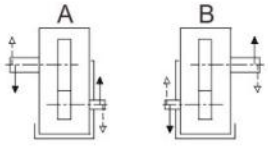

Sizes 3-11

JRHH1SH Sizes 13-19
With Fan

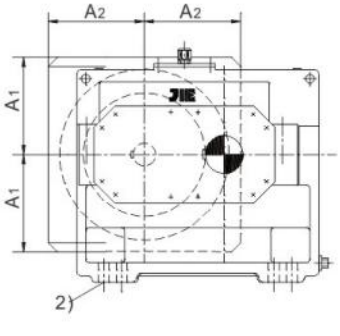

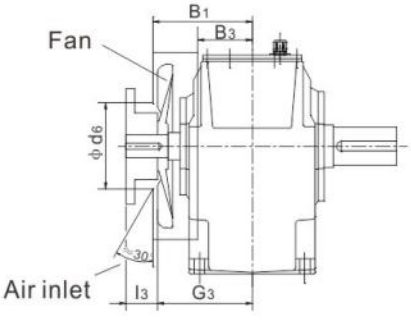

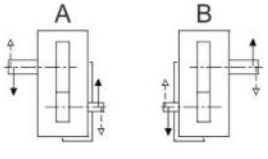

Sizes 13-19

1)m6≤ ϕ 100;n6> ϕ 100 Keyway、Hubkeyway、Parallel key,see pages 98-99.
2)Space for pump,pipes and cover;for exact dimensions,Please refer to JIE.

Helical gear units
Single Stage Horizontal
Type JRHH1SH Sizes 3-19



Size	Dimension (mm)																
	Input															G_1	G_3
	i_N=1.25-2.8			i_N=1.6-2.8			i_N=2-2.8			i_N=3.15-4			i_N=4.5-5.6				
	d_1	l_1	l_3	d_1	l_1	l_3	d_1	l_1	l_3	d_1	l_1	l_3	d_1	l_1	l_3		
3	60	125	105							45	100	80				170	190
5	85	160	130							60	135	105	50	110	80	210	240
7	100	200	165							75	140	105	60	140	105	250	285
9	110	200	165							90	165	130	75	140	105	280	315
11				130	240	205				110	205	170	90	170	135	325	360
13				150	245	200				130	245	200	100	210	165	365	410
15							180	290	240	150	250	200	125	250	200	360	410
17							200	330	280	170	290	240	140	250	200	400	450
19							220	340	290	190	340	290	160	300	250	440	490

Size	Dimension (mm)																		
	Gear units																		
	a	A_1	A_2	A_3	b	B_1	B_2	B_3	c	d_6	E	h	h_5	H	m_1	m_2	m_3	n_1	n_2	s
3	420	150	145	80	200	205	130	-	28	130	130	200	85	375	310	-	160	55	110	19
5	580	225	215	115	285	255	185	-	35	190	185	290	100	525	440	-	240	70	160	24
7	690	255	250	120	375	300	230	-	45	245	225	350	75	625	540	-	315	75	195	28
9	805	300	265	140	425	330	265	-	50	280	265	420	50	735	625	-	350	90	225	35
11	960	360	330	190	515	375	320	-	60	350	320	500	40	875	770	-	440	95	280	35
13	1100	415	350	-	580	430	-	150	70	350	370	580	40	1020	870	-	490	115	315	42
15	1295	500	430	-	545	430	-	120	80	450	442	600	10	1115	1025	-	450	135	370	48
17	1410	550	430	-	615	470	-	150	80	445	490	670	-	1235	1170	130	530	120	425	42
19	1590	630	475	-	690	510	-	190	90	445	555	760	-	1395	1290	150	590	150	465	48

Size	Dimension (mm)			Oil (L)		Weight (kg)
	Output			Shaft seal	Labyinth seal	
	d_2	G_2	l_2			
3	60	170	125	7	5.2	128
5	85	210	160	22	18	302
7	105	250	200	42	34	547
9	125	270	210	68	57	862
11	150	320	240	120	100	1515
13	180	360	310	175	155	2395
15	220	360	350	190	156	3200
17	240	400	400	270	225	4250
19	270	440	450	390	330	5800

Helical gear units
Two Stage Horizontal
Type JRHH2.H Sizes 3-12

JRHH2SH JRHH2HH JRHH2DH

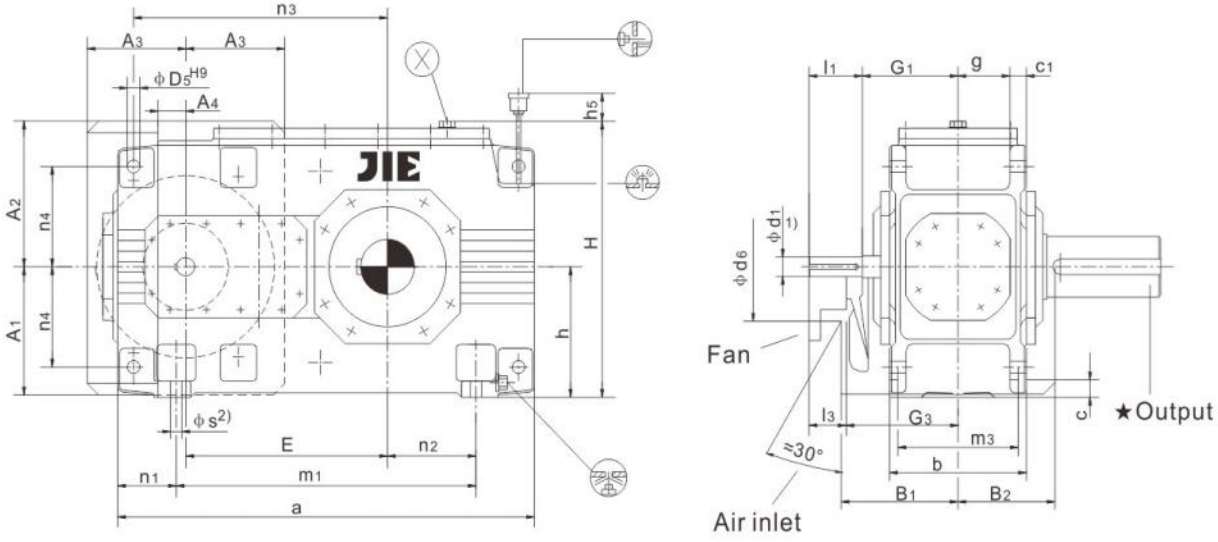

★Output			Design
JRHH2SH Solid shaft	**JRHH2HH** Hollow shaft	**JRHH2DH** Hollow shaft for shrink disk	
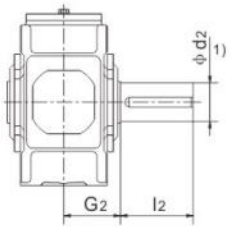	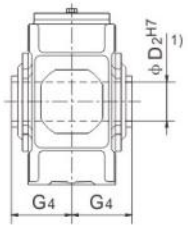	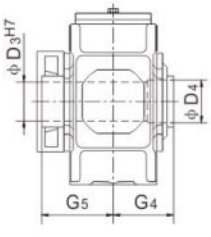	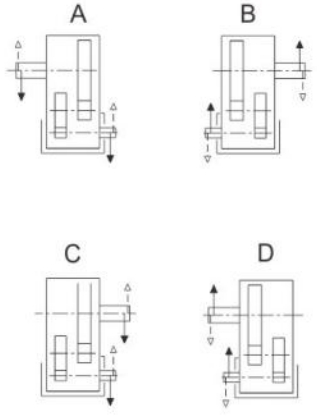

1) m6≤ ϕ 100;n6> ϕ 100 Keyway、Hubkeyway、Parallel key,see pages 98–99.

2) Remove air guide cover before fitting foundation bolts.

Helical gear units
Two Stage Horizontal
Type JRHH2H Sizes 3-12





规格 Size	Dimension (mm) Input												G1	G3
	iN=6.3-11.2 1)			iN=8-14			iN=12.5-22.4			iN=16-28				
	d1	l1	l3	d1	l1	l3	d1	l1	l3	d1	l1	l3		
3	38	82	-										135	-
4	48	100	70										140	170
5	50	100	80				38	80	60				195	215
6				50	100	80				38	80	60	195	215
7	60	135	105				50	110	80				210	240
8				60	135	105				50	110	80	210	240
9	75	140	110				60	140	110				240	270
10				75	140	110				60	140	110	240	270
11	90	165	130				70	140	105				275	310
12				90	165	130				70	140	105	275	310

Size	Dimension (mm) Gear Units											
	a	A1	A2	A3	A4	b	B1	B2	c	c1	D5	d6
3	460	-	-	-	-	190	-	-	22	37±1	18	-
4	575	195	225	150	30	215	190	158	28	30±1	24	136
5	640	225	260	175	55	255	230	177.5	28	30±1	24	150
6	720	225	260	175	55	255	230	177.5	28	30±1	24	150
7	785	272	305	210	70	300	255	210	35	36±1	28	200
8	890	272	305	210	70	300	255	210	35	36±1	28	200
9	925	312	355	240	100	370	285	245	40	45±1.5	36	200
10	1025	312	355	240	100	370	285	245	40	45±1.5	36	200
11	1105	372	420	285	135	430	325	285	50	54±1.5	40	210
12	1260	372	420	285	135	430	325	285	50	54±1.5	40	210

Size	Dimension (mm) Gear Units											
	E	g	h	h5	H	m1	m3	n1	n2	n3	n4	s
3	220	58	175	100	350	290	160	85	65	285	132.5	15
4	270	62.5	200	110	400	355	180	110	85	345	150	19
5	315	97.5	230	150	482	430	220	105	100	405	180	19
6	350	97.5	230	150	482	510	220	105	145	440	180	19
7	385	114	280	190	572	545	260	120	130	500	215	24
8	430	114	280	190	582	650	260	120	190	545	215	24
9	450	140	320	205	662	635	320	145	155	585	245	28
10	500	140	320	215	662	735	320	145	205	635	245	28
11	545	161	380	250	782	775	370	165	180	710	300	35
12	615	161	380	250	790	930	370	165	265	780	300	35

Size	Dimension (mm) Output									Oil (L)		Weight (kg)
	JRHH2SH			JRHH2HH		JRHH2DH				Shaft seal	Labyinth seal	
	d2	G2	l2	D2	G4	D3	D4	G4	G5			
3	65	125	140	-	-	-	-	-	-	7	5	120
4	80	140	170	80	140	85	85	140	205	10	7	190
5	100	165	210	95	165	100	100	165	240	15	11	300
6	110	165	210	105	165	110	110	165	240	16	12	355
7	120	195	210	115	195	120	120	195	280	27	21	505
8	130	195	250	125	195	130	130	195	285	30	23	590
9	140	235	250	135	235	140	145	235	330	42	33	830
10	160	235	300	150	235	150	155	235	350	45	34	960
11	170	270	300	165	270	165	170	270	400	71	58	1335
12	180	270	300	180	270	180	185	270	405	76	60	1615

1) 规格3和4：i_N =4.5-22.4

Helical gear units
Two Stage Horizontal
Type JRHH2.H JRHH2.M Sizes 13-22

JRHH2SH JRHH2HH JRHH2DH

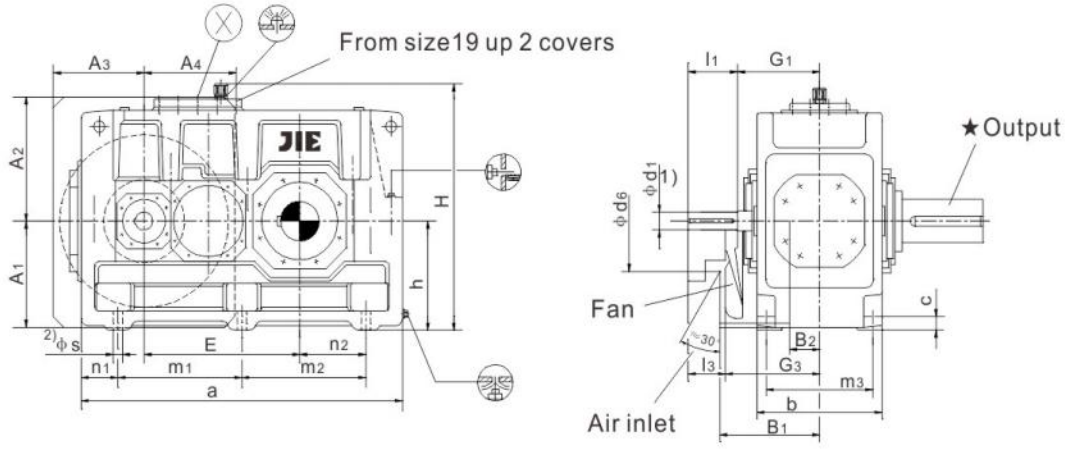

JRHH2HM JRHH2DM

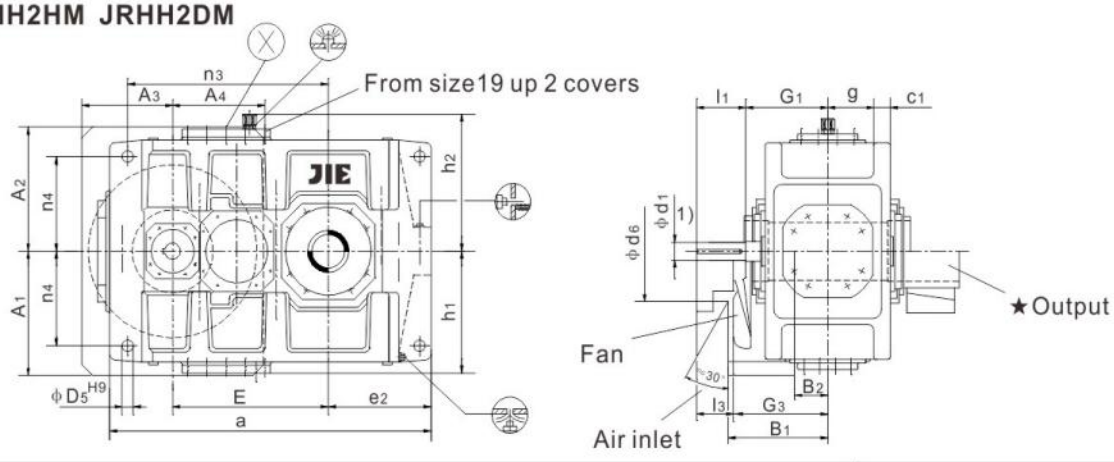

★Output			Design
JRHH2SH Solid shaft	**JRHH2HH[3],JRHH2HM[3]** Hollow shaft	**JRHH2DH[3],JRHH2DM[3]** Hollow shaft for shrink disk	
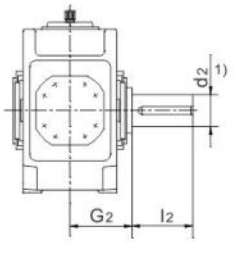	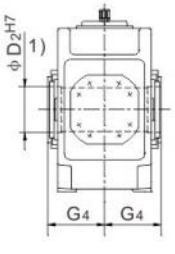	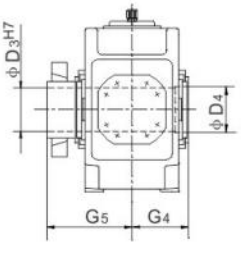	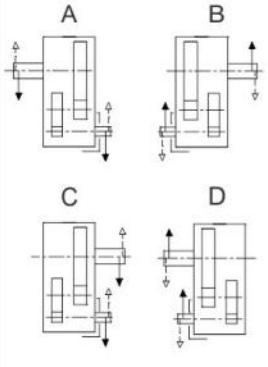

1)m6≤ ϕ100;n6> ϕ100
Keyway、Hubkeyway、Parallel key,see pages 98–99.
2)Remove air guide cover before fitting foundation bolts.
3)Sizes 13 and15:only i_N=6.3–18:Sizes 17and 19:only i_N=6.3–16

Helical gear units
Two Stage Horizontal
Type JRHH2H JRHH2M Sizes 13-22





Size	Dimension (mm)																			
	Input																			
	i_N=6.3-11.2			i_N=7.1-12.5			i_N=8-14			i_N=12.5-20			i_N=14-22.4			i_N=16-25			G_1	G_3
	d_1	l_1	l_3	d_1	l_1	l_3	d_1	l_1	l_3	d_1	l_1	l_3	d_1	l_1	l_3	d_1	l_1	l_3		
13	100	205	170							85	170	135							330	365
14							100	205	170							85	170	135	330	365
15	120	210	165							100	210	165							365	410
16				120	210	165							100	210	165				365	410
17	125	245	200							110	210	165							420	465
18				125	245	200							110	210	165				420	465
19	150	245	200							120	210	165							475	520
20				150	245	200							120	210	165				475	520
21	170	290	240							140	250	200							495	545
22				170	290	240							140	250	200				495	545

Size	Dimension (mm)												
	Gear Units												
	a	A_1	A_2	A_3	A_4	b	B_1	B_2	c	c_1	d_6	D_5	e_2	E
13	1290	430	460	330	365	550	385	135	60	61±2	250	48	405	635
14	1430	430	460	330	365	550	385	135	60	61±2	250	48	475	705
15	1550	490	500	370	440	625	430	155	70	72±2	280	55	485	762
16	1640	490	500	370	440	625	430	155	70	72±2	280	55	530	808
17	1740	540	565	435	505	690	485	140	80	81±2	280	55	525	860
18	1860	540	565	435	505	690	485	140	80	81±2	280	55	585	920
19	2010	600	600	500	450	790	540	190	90	91±2	310	65	590	997
20	2130	600	600	500	450	790	540	190	90	91±2	310	65	650	1057
21	2140	600	600	500	450	830	540	190	100	100±2	310	75	655	1067
22	2250	680	680	500	610	830	565	200	100	100±2	450	75	710	1122

Size	Dimension (mm)												
	Gear Units												
	g	h	h_1	h_2	H	m_1	m_2	m_3	n_1	n_2	n_3	n_4	s
13	211.5	440	450	460	900	545	545	475	100	305	835	340	35
14	211.5	440	450	460	900	545	685	475	100	375	905	340	35
15	238	500	490	500	1000	655	655	535	120	365	1005	375	42
16	238	500	490	500	1000	655	745	535	120	410	1050	375	42
17	259	550	555	560	1110	735	735	600	135	390	1145	425	42
18	259	550	555	560	1110	735	855	600	135	450	1205	425	42
19	299	620	615	620	1240	850	850	690	155	435	1345	475	48
20	299	620	615	620	1240	850	970	690	155	495	1405	475	48
21	310	700	685	690	1390	900	900	720	170	485	1400	520	56
22	310	700	685	690	1390	900	1010	720	170	540	1455	520	56

Size	Dimension (mm)									Oil (L)			Weight (kg)	
	Output									JRHH2.H		JRHH2.M		
	JRHH2SH			JRHH2HH JRHH2HM		JRHH2DH		JRHH2DM		Shaft seal	Labyinth seal		JRHH2.H	JRHH2.M
	d_2	G_2	l_2	D_2	G_4	D_3	D_4	G_4	G_5					
13	200	335	350	190	335	190	195	335	480	135	120	110	2000	1880
14	210	335	350	210	335	210	215	335	480	140	130	115	2570	2430
15	230	380	410	230	380	230	235	380	550	210	190	160	3430	3240
16	240	380	410	240	380	240	245	380	550	215	200	165	3655	3465
17	250	415	410	250	415	250	260	415	600	290	260	230	4650	4420
18	270	415	470	275	415	280	285	415	600	300	270	240	5125	4870
19	290	465	470	-	-	285	295	465	670	320	-	300	6600	6300
20	300	465	500	-	-	310	315	465	670	340	-	320	7500	7200
21	320	490	500	-	-	330	335	490	715	320	-	350	8900	
22	340	490	500	-	-	340	345	490	725	340	-	370	9600	

Helical gear units
Two Stage Horizontal
Type JRHH2.H JRHH2.M Sizes 23-28

JRHH2SH JRHH2HH JRHH2DH

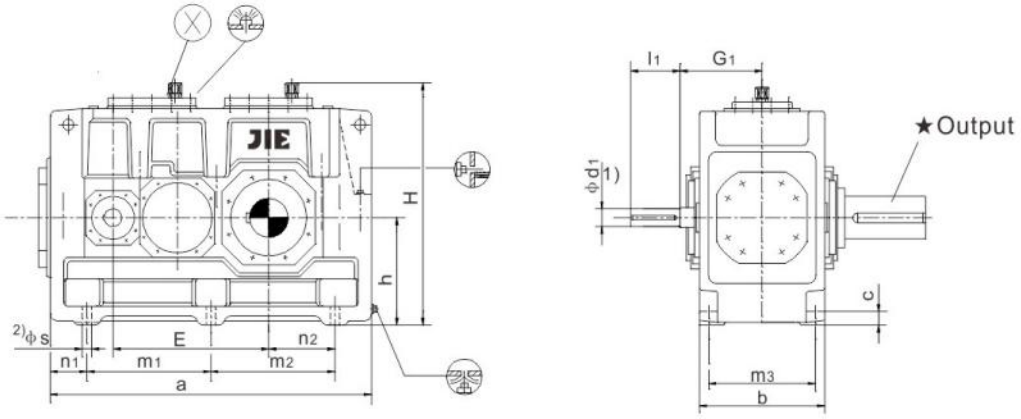

JRHH2HM JRHH2DM

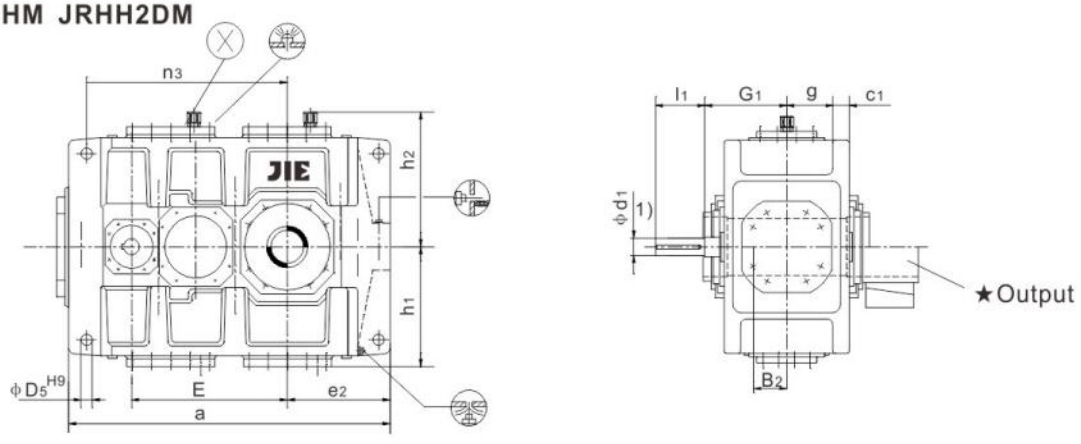

★ Output			Design
JRHH2SH Solid shaft	**JRHH2HH,JRHH2HM** Hollow shaft	**JRHH2DH,JRHH2DM** Hollow shaft for shrink disk	
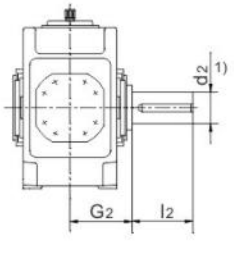	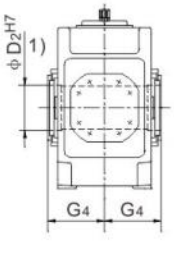	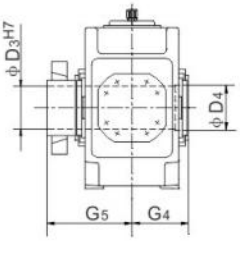	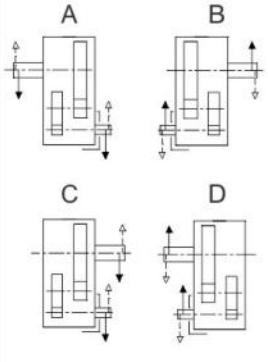

1)m6≤ ϕ100;n6> ϕ100
Keyway、Hubkeyway、Parallel key,see pages 98–99.

2)Remove air guide cover before fitting foundation bolts.

Helical gear units
Two Stage Horizontal
Type JRHH2.H JRHH2.M Sizes 23-28





Size	Dimension (mm)																
	Input																
	i_N=6.3-10		i_N=7.1-11.2		i_N=8.0-10		i_N=9.0-11.2		i_N=11.2-20		i_N=12.5-22.4		i_N=11.2-20		i_N=12.5-22.4		G_1
	d_1	l_1	d_1	l_1	d_1	l_1	d_1	l_1	d_1	l_1	d_1	l_1	d_1	l_1	d_1	l_1	
23	190	330							150	250							560
24			190	330							150	250					560
25	200	340							170	300							600
26			200	340							170	300					600
27					240	380							200	340			670
28							240	380							200	340	670

Size	Dimension (mm)									
	Gear Units									
	a	b	c	c_1	D_5	e_2	E	g	h	h_1
23	2380	930	115	120±2	80	730	1185	342	780	765
24	2510	930	115	120±2	80	795	1250	342	780	765
25	2645	1045	130	120±2	90	790	1325	400	860	860
26	2825	1045	130	120±2	90	880	1415	400	860	860
27	2960	1170	150	145±2	100	880	1485	440	950	950
28	3150	1170	150	145±2	100	975	1580	440	950	950

Size	Dimension (mm)									
	Gear Units									
	h_2	H	m_1	m_2	m_3	n_1	n_2	n_3	n_4	s
23	785	1565	1010	1010	810	180	550	1560	580	56
24	785	1565	1010	1140	810	180	615	1625	580	56
25	880	1740	1155	1090	910	200	590	1750	660	66
26	880	1740	1155	1270	910	200	680	1840	660	66
27	950	1900	1260	1260	1030	220	660	2000	720	74
28	950	1900	1260	1450	1030	220	755	2095	720	74

Size	Dimension (mm)							Oil (L)		Weight (kg)	
	Output							JRHH2.H	JRHH2.M	JRHH2.H	JRHH2.M
	JRHH2SH			JRHH2DH JRHH2DM							
	d_2	G_2	l_2	D_3	D_4	G_4	G_5				
23	360	540	590	370	375	540	800	430	470	11600	11000
24	380	540	590	390	395	540	820	450	500	13000	12300
25	400	605	650	410	415	610	895	640	700	15600	14800
26	420	605	650	430	435	610	925	680	740	17500	16500
27	440	680	690	460	465	680	1000	880	970	22000	21000
28	460	680	750	470	475	680	1020	940	1030	25000	23800

Helical gear units
Three Stage Horizontal
Type JRHH3.H Sizes 5-12

JRHH3SH JRHH3HH JRHH3DH

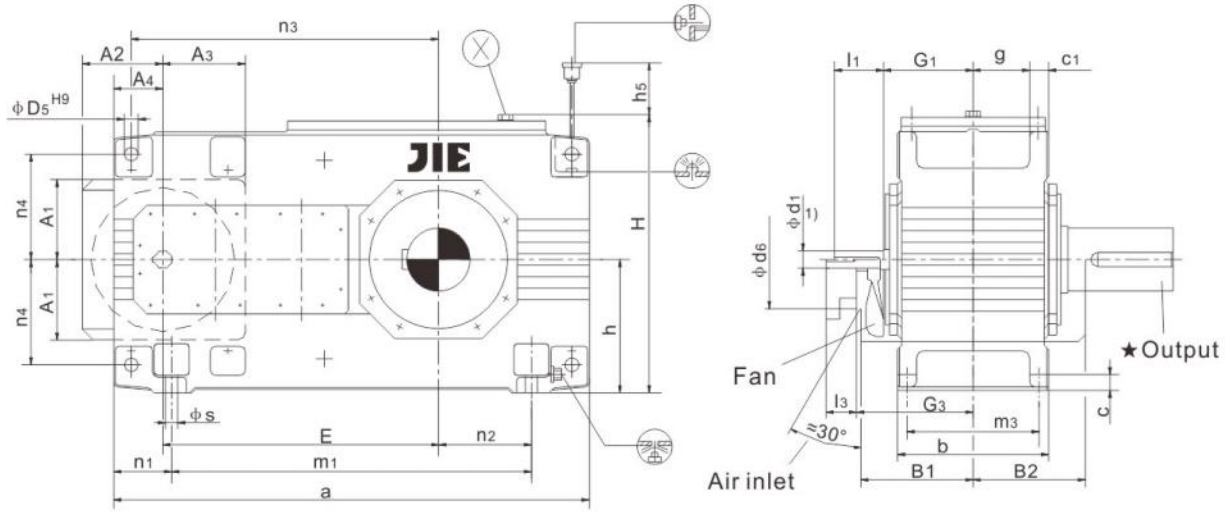

★Output			Design
JRHH3SH Solid shaft	**JRHH3HH** Hollow shaft	**JRHH3DH** Hollow shaft for shrink disk	
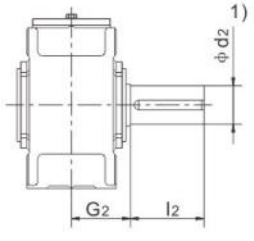	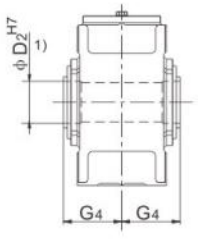	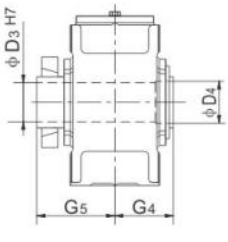	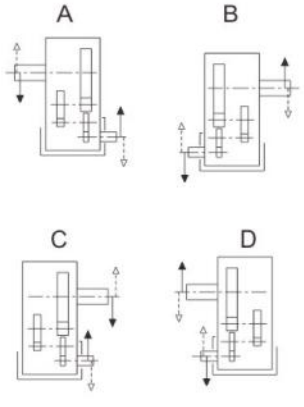

1)m6≤ φ100;n6> φ100
Keyway、Hubkeyway、Parallel key,see pages98–99.

Helical gear units
Three Stage Horizontal
Type JRHH3.H Sizes 5-12





Size	Dimension (mm)																			
	Input																		G_1	G_3
	i_N=25-45			i_N=31.5-56			i_N=50-63			i_N=63-80			i_N=71-90			i_N=90-112				
	d_1	l_1	l_3	d_1	l_1	l_3	d_1	l_1	l_3	d_1	l_1	l_3	d_1	l_1	l_3	d_1	l_1	l_3		
5	40	70	70				30	50	50				24	40	40				160	220
6				40	70	70				30	50	50				24	40	40	160	220
7	45	80	80				35	60	60				28	50	50				185	250
8				45	80	80				35	60	60				28	50	50	185	250
9	60	125	105				45	100	80				32	80	60				230	300
10				60	125	105				45	100	80				32	80	60	230	300
11	70	120	120				50	80	80				42	70	70				255	330
12				70	120	120				50	80	80				42	70	70	255	330

Size	Dimension (mm)											
	Gear Units											
	a	A_1	A_2	A_3	A_4	b	B_1	B_2	c	c_1	d_6	D_5
5	690	137	135	140	80	255	215	175	28	30 ± 1	60	24
6	770	137	135	140	80	255	215	175	28	30 ± 1	60	24
7	845	157	160	180	100	300	245	205	35	36 ± 1	75	28
8	950	157	160	180	100	300	245	205	35	36 ± 1	75	28
9	1000	182	190	205	120	370	295	240	40	45 ± 1.5	90	36
10	1100	182	190	205	120	370	295	240	40	45 ± 1.5	90	36
11	1200	218	220	255	150	430	325	280	50	54 ± 1.5	100	40
12	1355	218	220	255	150	430	325	280	50	54 ± 1.5	100	40

Size	Dimension (mm)											
	Gear Units											
	E	g	h	h_5	H	m_1	m_3	n_1	n_2	n_3	n_4	s
5	405	97.5	230	130	482	480	220	105	100	455	180	19
6	440	97.5	230	130	482	560	220	105	145	490	180	19
7	495	114	280	170	572	605	260	120	130	560	215	24
8	540	114	280	160	582	710	260	120	190	605	215	24
9	580	140	320	185	662	710	320	145	155	660	245	28
10	630	140	320	185	662	810	320	145	205	710	245	28
11	705	161	380	180	782	870	370	165	180	805	300	35
12	775	161	380	170	790	1025	370	165	265	875	300	35

Size	Dimension (mm)									Oil (L)	Weight (kg)
	Output										
	JRHH3SH			JRHH3HH		JRHH3DH					
	d_2	G_2	l_2	D_2	G_4	D_3	D_4	G_4	G_5		
5	100	165	210	95	165	100	100	165	240	16	320
6	110	165	210	105	165	110	110	165	240	18	365
7	120	195	210	115	195	120	120	195	280	29	540
8	130	195	250	125	195	130	130	195	285	32	625
9	140	235	250	135	235	140	145	235	330	48	875
10	160	235	300	150	235	150	155	235	350	49	1020
11	170	270	300	165	270	165	170	270	400	85	1400
12	180	270	300	180	270	180	185	270	405	90	1675

Helical gear units
Three Stage Horizontal
Type JRHH3.H JRHH3.M Sizes 13-22

JRHH3SH JRHH3HH JRHH3DH

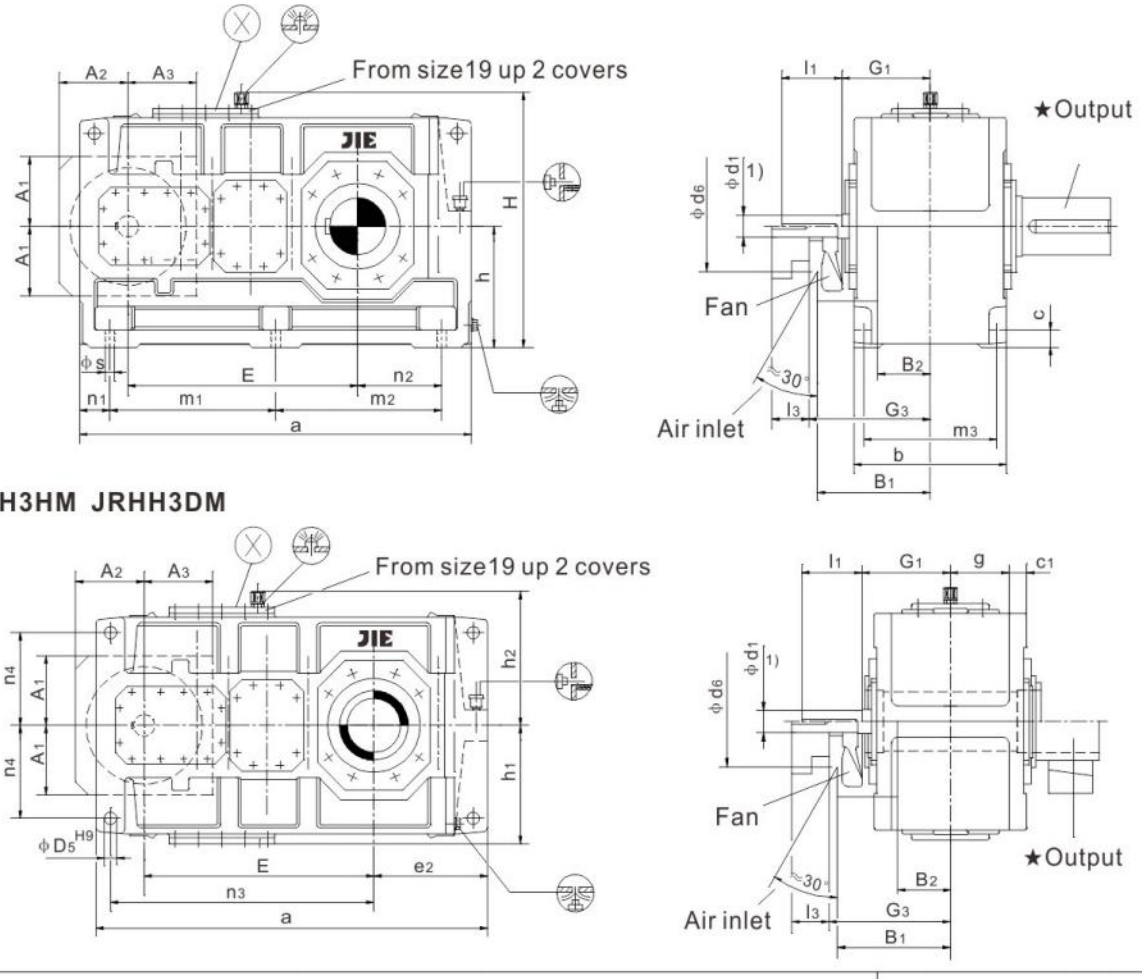

JRHH3HM JRHH3DM

★Output			Design
JRHH3SH Solid shaft	**JRHH3HH,JRHH3HM** Hollow shaft	**JRHH3DH,JRHH3DM** Hollow shaft for shrink disk	

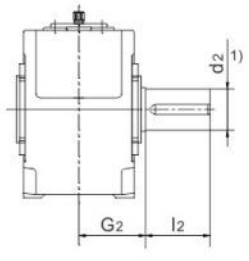

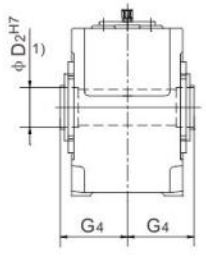

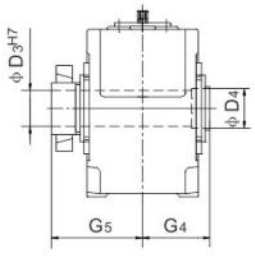

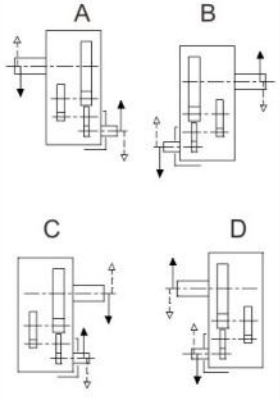

1)m6≤ ϕ100;n6> ϕ100
Keyway、Hubkeyway、Parallel key,see pages 98–99.

Helical gear units
Three Stage Horizontal
Type JRHH3.H JRHH3.M Sizes 13-22





Size	Dimension (mm) Input																		G_1	G_3
	i_N=22.4-45			i_N=25-50 i_N=28-56*)			i_N=50-63			i_N=56-71 i_N=63-80*)			i_N=71-90			i_N=80-100 i_N=90-112*)				
	d_1	l_1	l_3	d_1	l_1	l_3	d_1	l_1	l_3	d_1	l_1	l_3	d_1	l_1	l_3	d_1	l_1	l_3		
13	85	160	130				60	135	105				50	110	80				310	385
14				85	160	130				60	135	105				50	110	80	310	385
15	100	200	165				75	140	105				60	140	105				350	420
16				100	200	165				75	140	105				60	140	105	350	420
17	100	200	165				75	140	105				60	140	105				380	450
18				100	200	165				75	140	105				60	140	105	380	450
19	110	200	4)				90	165	4)				75	140	4)				430	4)
20				110	200	4)				90	165	4)				75	140	4)	430	
21	130	240	4)				110	205	4)				90	170	4)				470	
22				130	240	4)				110	205	4)				90	170	4)	470	

Size	Dimension (mm) Gear Units												
	a	A_1	A_2	A_3	b	B_1	B_2	c	c_1	d_6	D_5	e_2	E
13	1395	225	225	212	550	380	195	60	61±2	120	48	405	820
14	1535	225	225	212	550	380	195	60	61±2	120	48	475	890
15	1680	270	265	252	625	415	205	70	72±2	150	55	485	987
16	1770	270	265	252	625	415	205	70	72±2	150	55	530	1033
17	1770	270	265	252	690	445	235	80	81±2	150	55	525	1035
18	1890	270	265	252	690	445	235	80	81±2	150	55	585	1095
19	2030	4)	4)	4)	790	4)	4)	90	91±2	4)	65	590	1190
20	2150				790			90	91±2		65	650	1250
21	2340				830			100	100±2		75	655	1387
22	2450				830			100	100±2		75	710	1442

Size	Dimension (mm) Gear Units												
	g	h	h_1	h_2	H	m_1	m_2	m_3	n_1	n_2	n_3	n_4	s
13	211.5	440	450	460	900	597.5	597.5	475	100	305	940	340	35
14	211.5	440	450	460	900	597.5	737.5	475	100	375	1010	340	35
15	238	500	490	500	1000	720	720	535	120	365	1135	375	42
16	238	500	490	500	1000	720	810	535	120	410	1180	375	42
17	259	550	555	560	1110	750	750	600	135	390	1175	425	42
18	259	550	555	560	1110	750	870	600	135	450	1235	425	42
19	299	620	615	620	1240	860	860	690	155	435	1365	475	48
20	299	620	615	620	1240	860	980	690	155	495	1425	475	48
21	310	700	685	690	1390	1000	1000	720	170	485	1600	520	56
22	310	700	685	690	1390	1000	1110	720	170	540	1655	520	56

Size	Dimension (mm) Output									Oil (L)		Weight (kg)	
	JRHH3SH			JRHH3HH JRHH3HM		JRHH3DH JRHH3DM				JRHH3.H	JRHH3.M	JRHH3.H	JRHH3.M
	d_2	G_2	l_2	D_2	G_4	D_3	D_4	G_4	G_5				
13	200	335	350	190	335	190	195	335	480	160	125	2295	2155
14	210	335	350	210	335	210	215	335	480	165	130	2625	2490
15	230	380	410	230	380	230	235	380	550	235	190	3475	3260
16	240	380	410	240	380	240	245	380	550	245	195	3875	3625
17	250	415	410	250	415	250	260	415	600	305	240	4560	4250
18	270	415	470	275	415	280	285	415	600	315	250	5030	4740
19	290	465	470	-	-	285	295	465	670	420	390	6700	6200
20	300	465	500	-	-	310	315	465	670	450	415	8100	7600
21	320	490	500	-	-	330	335	490	715	470	515	9100	8500
22	340	550	490	-	-	340	345	490	725	490	540	9800	9300

*Only for NO.14 unit

4) On request

Helical gear units
Three Stage Horizontal
Type JRHH3.H JRHH3.M Sizes 23-28

JRHH3SH JRHH3HH JRHH3DH

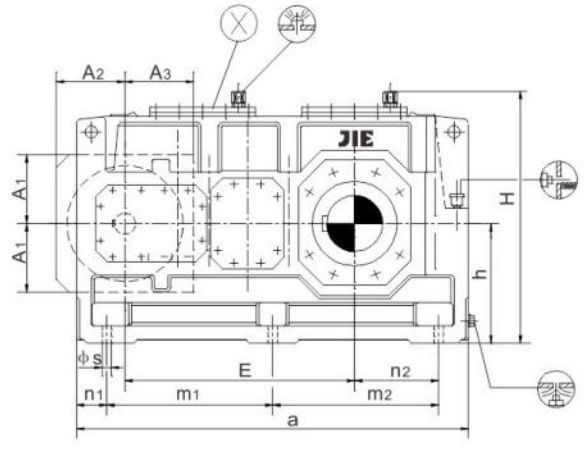

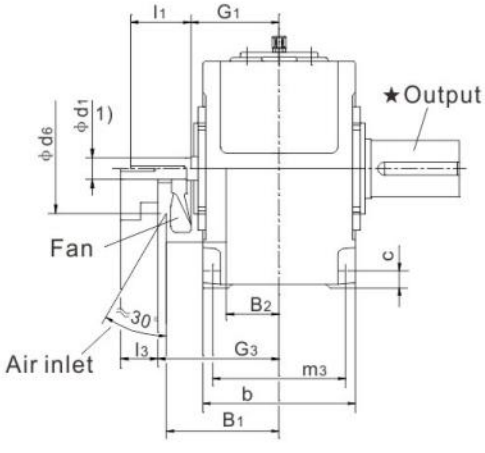

JRHH3HM JRHH3DM

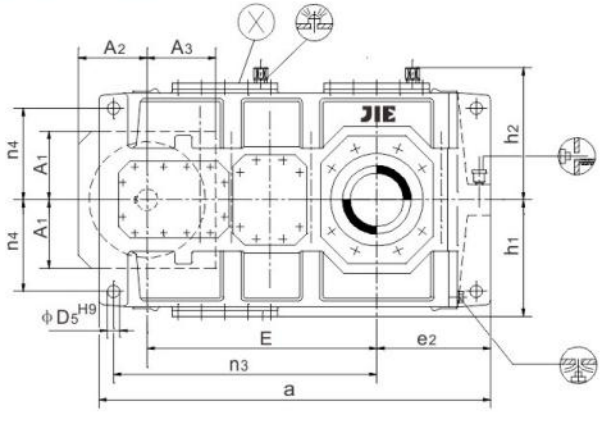

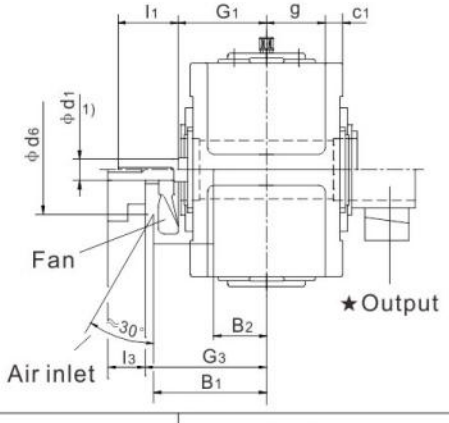

★Output			Design
JRHH3SH Solid shaft	**JRHH3HH,JRHH3HM** Hollow shaft	**JRHH3DH,JRHH3DM** Hollow shaft for shrink disk	
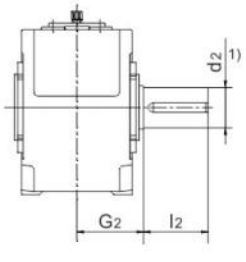	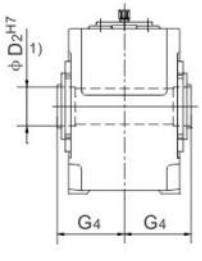	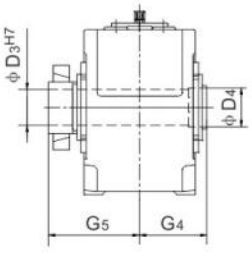	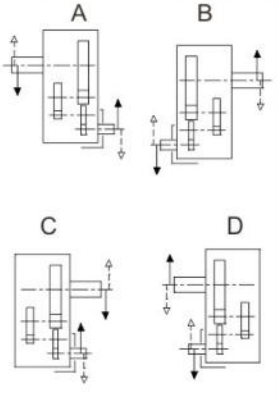

1)m6≤ φ100;n6> φ100
Keyway、Hubkeyway、Parallel key,see pages 98–99.

Helical gear units
Three Stage Horizontal
Type JRHH3.H JRHH3.M Sizes 23-28





Size	Dimension (mm)																			
	Input																			
	i_N=22.4-40			i_N=25-45			i_N=45-56			i_N=50-63			i_N=63-90			i_N=71-100			G_1	G_3
	d_1	l_1	l_3	d_1	l_1	l_3	d_1	l_1	l_3	d_1	l_1	l_3	d_1	l_1	l_3	d_1	l_1	l_3		
23	130	255	200				110	220	165				90	185	130				515	570
24				130	255	200				110	220	165				90	185	130	515	570
25	150	255	200				130	255	200				100	220	165				580	635
26				150	255	200				130	255	200				100	220	165	580	635
27	180	295	240				150	255	200				125	255	200				650	705
28				180	295	240				150	255	200				125	255	200	650	705

Size	Dimension (mm)												
	Gear Units												
	a	b	A_1	A_2	A_3	b	B_1	B_2	c	c_1	d_6	D_5	e_2	E
23	2530	960	415	415	415	930	590	305	115	120±2	350	80	730	1505
24	2660	960	415	415	415	930	590	305	115	120±2	350	80	795	1570
25	2830	1045	440	440	440	1045	655	335	130	120±2	414	90	790	1695
26	3010	1045	440	440	440	1045	655	335	130	120±2	414	90	880	1785
27	3220	1170	510	510	510	1170	725	380	150	140±2	446	100	880	1927
28	3410	1170	510	510	510	1170	725	380	150	140±2	446	100	975	2022

Size	Dimension (mm)												
	Gear Units												
	g	h	h_1	h_2	H	m_1	m_2	m_3	n_1	n_2	n_3	n_4	s
23	342	780	765	785	1565	1085	1085	810	180	550	1725	580	56
24	342	780	765	785	1565	1085	1215	810	180	615	1790	580	56
25	400	860	860	880	1740	1215	1215	910	200	590	1965	660	66
26	400	860	860	880	1740	1215	1395	910	200	680	2055	660	66
27	440	950	930	950	1740	1390	1390	1030	220	660	2260	720	74
28	440	950	930	950	1740	1390	1580	1030	220	755	2355	720	74

Size	Dimension (mm)							Oil (L)		Weight (kg)	
	Output							JRHH3.H	JRHH3.M	JRHH3.H	JRHH3.M
	JRHH3SH			JRHH3DH		JRHH3DM					
	d_2	G_2	l_2	D_3	D_4	G_4	G_5				
23	360	540	590	370	375	540	800	620	690	11800	11200
24	380	540	590	390	395	540	820	650	725	13200	12500
25	400	605	650	410	415	610	895	880	970	16100	15300
26	420	605	650	430	435	610	925	935	1030	17700	16800
27	440	680	690	460	465	680	1000	1270	1410	22700	21700
28	460	680	750	470	475	680	1020	1345	1490	25500	24200

Helical gear units
Four Stage Horizontal
Type JRHH4.H Sizes 7-12

JRHH4SH JRHH4HH JRHH4DH

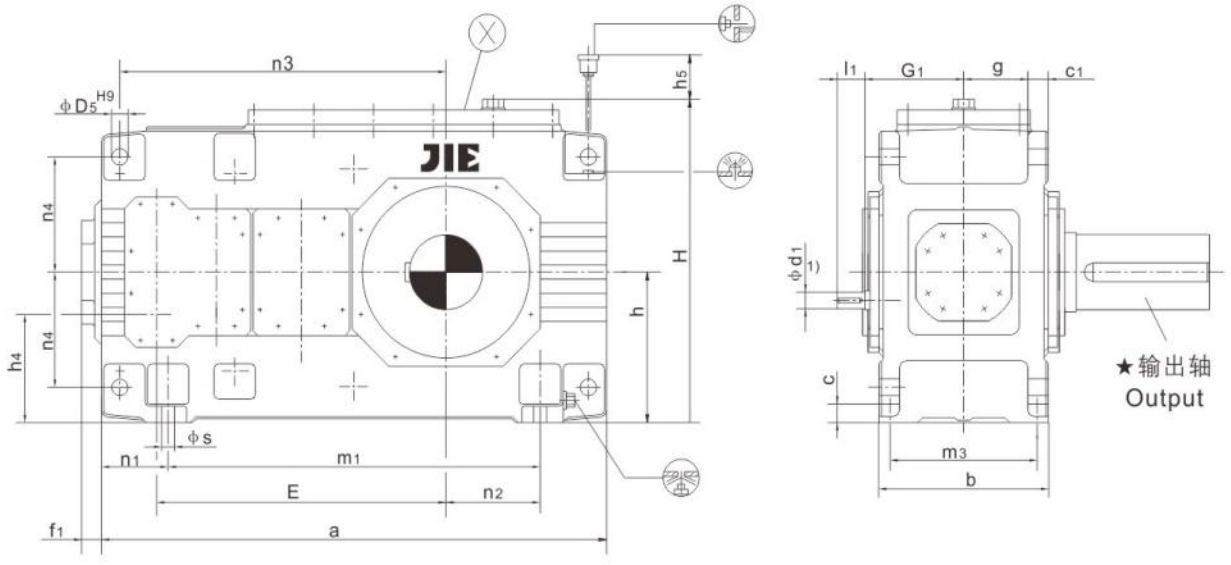

★Output			Design
JRHH4SH Solid shaft	**JRHH4HH** Hollow shaft	**JRHH4DH** Hollow shaft for shrink disk	
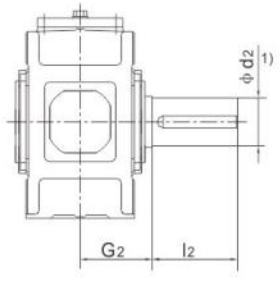	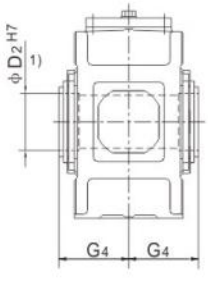	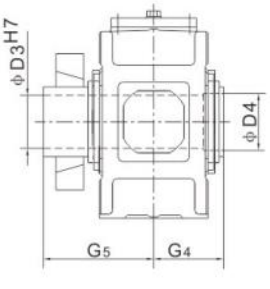	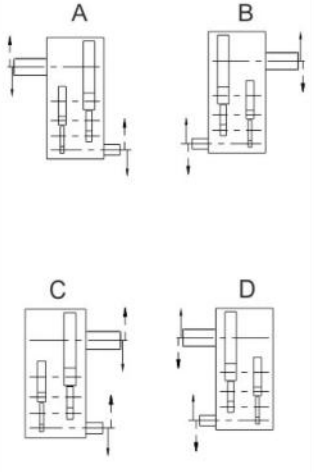

1)m6≤ϕ100;n6>ϕ100
Keyway、Hubkeyway、Parallel key,see pages 98–99.

Helical gear units
Four Stage Horizontal
Type JRHH4.H Sizes 7-12





Size	Dimension (mm)								
	Input								
	i_N=100-180		i_N=125-224		i_N=200-355		i_N=250-450		G_1
	d_1	l_1	d_1	l_1	d_1	l_1	d_1	l_1	
7	30	50			24	40			180
8			30	50			24	40	180
9	35	60			28	50			215
10			35	60			28	50	215
11	45	100			32	80			250
12			45	100			32	80	250

Size	Dimension (mm)																		
	Gear Units																		
	a	b	c	c_1	D_5	E	f_1	g	h	h_4	h_5	H	m_1	m_3	n_1	n_2	n_3	n_4	s
7	845	300	35	36±1	28	495	37	114	280	200	140	572	605	260	120	130	560	215	24
8	950	300	35	36±1	28	540	37	114	280	200	140	582	710	260	120	190	605	215	24
9	1000	370	40	45±1.5	36	580	43	140	320	230	150	662	710	320	145	155	660	245	28
10	1100	370	40	45±1.5	36	630	43	140	320	230	150	662	810	320	145	205	710	245	28
11	1200	430	50	54±1.5	40	705	47	161	380	270	165	782	870	370	165	180	805	300	35
12	1355	430	50	54±1.5	40	775	47	161	380	270	165	790	1025	370	165	265	875	300	35

Size	Dimension (mm)									Oil (L)	Weight (kg)
	Output										
	JRHH4SH			JRHH4HH		JRHH4DH					
	d_2	G_2	l_2	D_2	G_4	D_3	D_4	G_4	G_5		
7	120	195	210	115	195	120	120	195	280	25	550
8	130	195	250	125	195	130	130	195	285	27	645
9	140	235	250	135	235	140	145	235	330	48	875
10	160	235	300	150	235	150	155	235	350	50	1010
11	170	270	300	165	270	165	170	270	400	80	1460
12	180	270	300	180	270	180	185	270	405	87	1725

Helical gear units
Four Stage Horizontal
Type JRHH4.H JRHH4.M Sizes 13-22

JRHH4SH JRHH4HH JRHH4DH

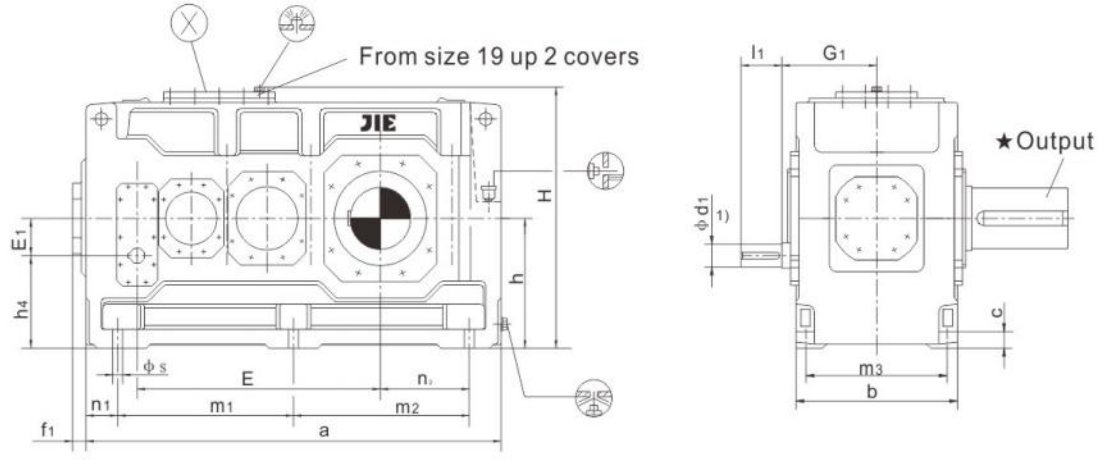

JRHH4HM JRHH4DM

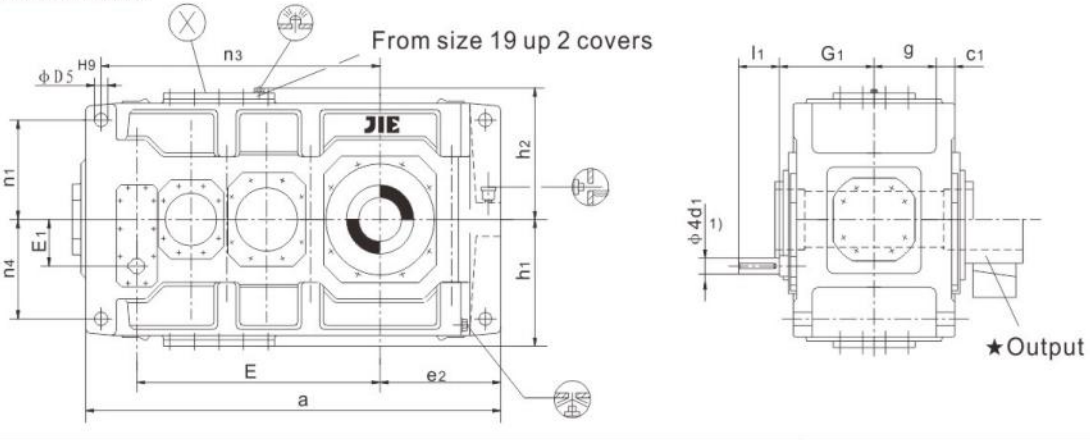

★Output			Design
JRHH4SH Solid shaft	**JRHH4HH,JRHH4HM** Hollow shaft	**JRHH4DH,JRHH4DM** Hollow shaft for shrink disk	
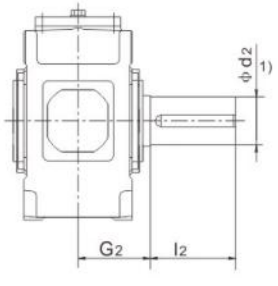	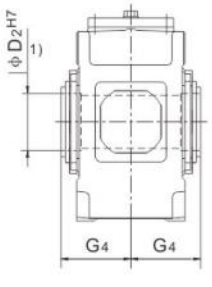	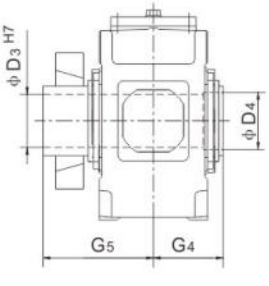	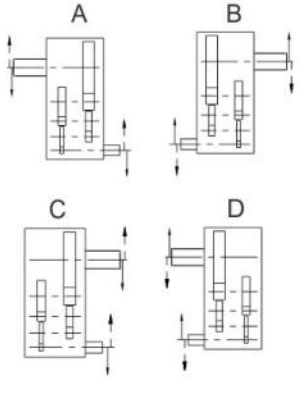

1)m6≤ φ100;n6> φ100
Keyway、Hubkeyway、Parallel key,see pages 98–99.

Helical gear units
Four Stage Horizontal
Type JRHH4.H JRHH4.M Sizes 13-22





Size	Dimension (mm)												
	Input												
	i_N=100-180		i_N=112-200		i_N=125-224		i_N=200-355		i_N=224-400		i_N=250-450		G_1
	d_1	l_1	d_1	l_1	d_1	l_1	d_1	l_1	d_1	l_1	d_1	l_1	
13	50	100					38	80					305
14					50	100					38	80	305
15	60	135					50	110					345
16			60	135					50	110			345
17	60	105					50	80					380
18			60	105					50	80			380
19	75	105					60	105					440
20			75	105					60	105			440
21	90	165					70	140					460
22			90	165					70	140			460

Size	Dimension (mm)										
	Gear Units										
	a	b	c	c_1	D_5	e_2	E	E_1	f_1	g	h
13	1395	550	60	61±2	48	405	820	130	47	211.5	440
14	1535	550	60	61±2	48	475	890	130	47	211.5	440
15	1680	625	70	72±2	55	485	987	160	56	238	500
16	1770	625	70	72±2	55	530	1033	160	56	238	500
17	1770	690	80	81±2	55	525	1035	160	53	259	550
18	1890	690	80	81±2	55	585	1095	160	53	259	550
19	2030	790	90	91±2	65	590	1190	185	53	299	620
20	2150	790	90	91±2	65	650	1250	185	53	299	620
21	2340	830	100	100±2	75	655	1387	225	62	310	700
22	2450	830	100	100±2	75	710	1442	225	62	310	700

Size	Dimension (mm)											
	Gear Units											
	h_1	h_2	h_4	H	m_1	m_2	m_3	n_1	n_2	n_3	n_4	s
13	450	460	310	900	597.5	597.5	475	100	305	940	340	35
14	450	460	310	900	597.5	737.5	475	100	375	1010	340	35
15	490	500	340	1000	720	720	535	120	365	1135	375	42
16	490	500	340	1000	720	810	535	120	410	1180	375	42
17	555	560	390	1110	750	750	600	135	390	1175	425	42
18	555	560	390	1110	750	870	600	135	450	1235	425	42
19	615	620	435	1240	860	860	690	155	435	1365	475	48
20	615	620	435	1240	860	980	690	155	495	1425	475	48
21	685	620	435	1390	1000	1000	720	170	485	1600	520	56
22	685	690	475	1390	1000	1110	720	170	490	1655	520	56

Size	Dimension (mm)									Oil (L)		Weight (kg)	
	Output												
	JRHH4SH			JRHH4HH JRHH4HM		JRHH4DH		JRHH4DM		JRHH4.H	JRHH4.M	JRHH4.H	JRHH4.M
	d_2	G_2	l_2	D_2	G_4	D_3	D_4	G_4	G_5				
13	200	335	350	190	335	190	195	335	480	130	120	2390	2270
14	210	335	350	210	335	210	215	335	480	140	125	2730	2600
15	230	380	410	230	380	230	235	380	550	230	170	3635	3440
16	240	380	410	240	380	240	245	380	550	235	175	3965	3740
17	250	415	410	250	415	250	260	415	600	290	225	4680	4445
18	270	415	470	275	415	280	285	415	600	305	230	5185	4915
19	290	465	470	-	-	285	295	465	670	360	310	6800	6300
20	300	465	500	-	-	310	315	465	670	380	330	8200	7700
21	320	490	500	-	-	330	334	490	715	395	430	9200	8600
22	340	490	500	-	-	340	345	490	725	420	450	9900	9400

Helical gear units
Four Stage Horizontal
Type JRHH4.H JRHH4.M Sizes 23-28

JRHH4SH JRHH4HH JRHH4DH

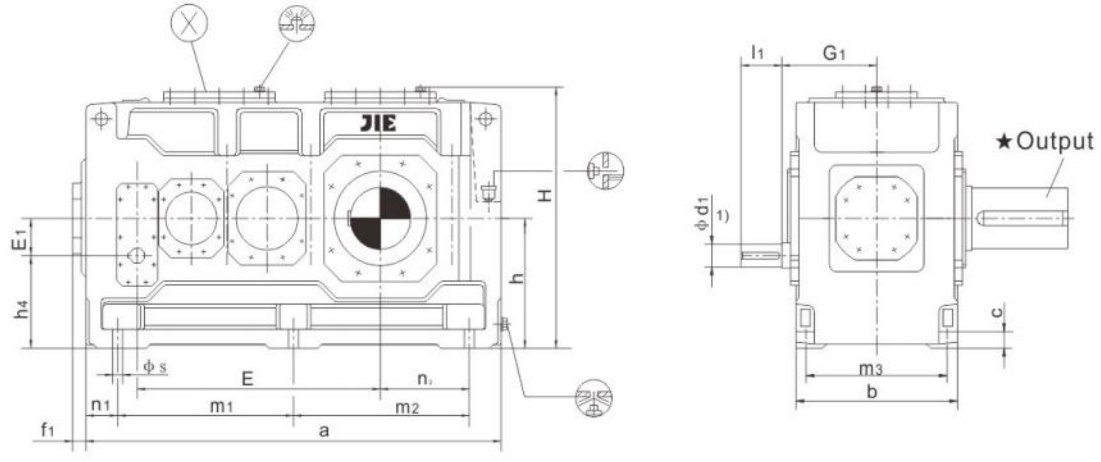

JRHH4HM JRHH4DM

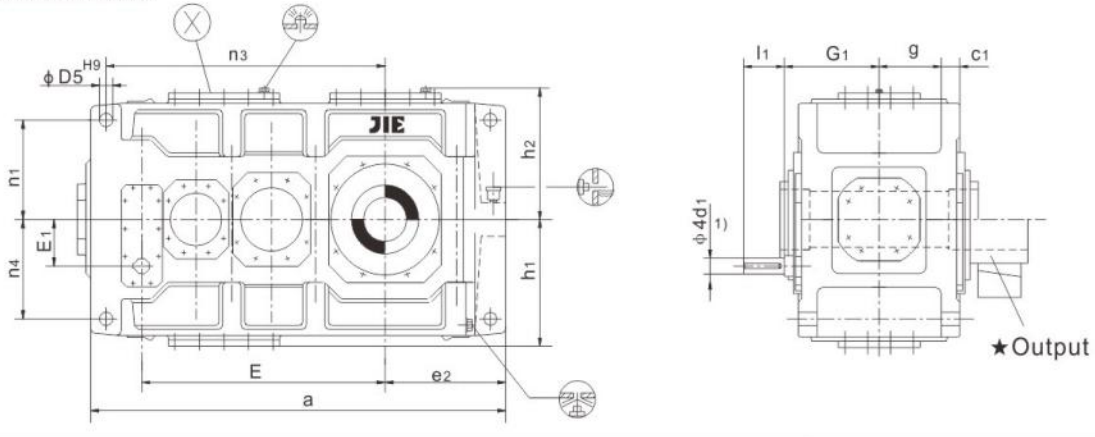

★Output			Design
JRHH4SH Solid shaft	**JRHH4HH,JRHH4HM** Hollow shaft	**JRHH4DH,JRHH4DM** Hollow shaft for shrink disk	
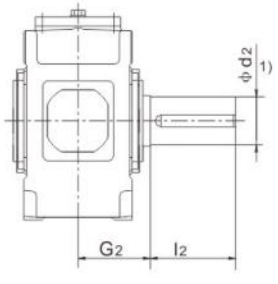	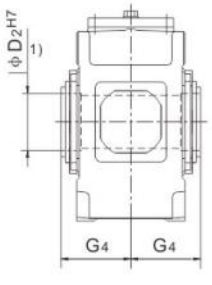	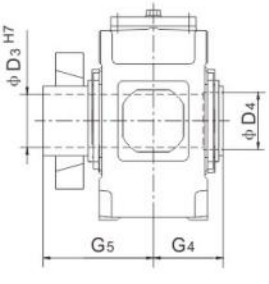	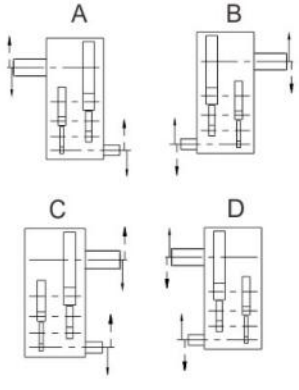

1)m6≤ φ100;n6> φ100
Keyway、Hubkeyway、Parallel key,see pages 98-99.

Helical gear units
Four Stage Horizontal
Type JRHH4.H JRHH4.M Sizes 23-28





Size	Dimension (mm)								
	Input								
	i_N=100-160		i_N=112-180		i_N=180-355		i_N=200-400		G_3
	d_1	l_1	d_1	l_1	d_1	l_1	d_1	l_1	
23	90	165			70	140			515
24			90	165			70	140	515
25	100	205			85	170			575
26			100	205			85	170	575
27	120	210			100	210			645
28			120	210			100	210	645

Size	Dimension (mm)											
	Gear Units											
	a	b	c	c_1	D_5	e_2	E	E_1	f_1	g	h	h_1
23	2530	930	115	120±2	80	730	1505	225	35	342	780	765
24	2660	930	115	120±2	80	795	1570	225	35	342	780	765
25	2830	1045	130	120±2	90	790	1695	265	35	400	860	860
26	3010	1045	130	120±2	90	880	1785	265	35	400	860	860
27	3220	1170	150	145±2	100	880	1927	320	40	440	950	930
28	3410	1170	150	145±2	100	975	2022	320	40	440	950	930

Size	Dimension (mm)										
	Gear Units										
	h_2	h_4	H	m_1	m_2	m_3	n_1	n_2	n_3	n_4	s
23	785	555	1565	1085	1085	810	180	550	1725	580	56
24	785	555	1565	1085	1215	810	180	615	1790	580	56
25	880	595	1740	1215	1215	910	200	590	1965	660	66
26	880	595	1740	1215	1395	910	200	680	2055	660	66
27	950	630	1900	1390	1390	1030	220	660	2260	720	74
28	950	630	1900	1390	1580	1030	220	755	2355	720	74

Size	Dimension (mm)							Oil (L)		Weight (kg)	
	Output							JRHH4.H	JRHH4.M	JRHH4.H	JRHH4.M
	JRHH4SH			JRHH4DH JRHH4DM							
	d_2	G_2	l_2	D_3	D_4	G_4	G_5				
23	360	540	590	370	375	540	800	520	565	12000	11400
24	380	540	590	390	395	540	820	550	600	13500	12800
25	400	605	650	410	415	610	895	735	800	16300	15500
26	420	605	650	430	435	610	925	780	850	18000	17100
27	440	680	690	460	465	680	1000	1055	1150	23000	22000
28	460	680	750	470	475	680	1020	1110	1210	26200	25000

Bevel-helical gear units
Two Stage Horizontal
Type JRHB2.H Sizes 4-12

JRHB2SH JRHB2HH JRHB2DH

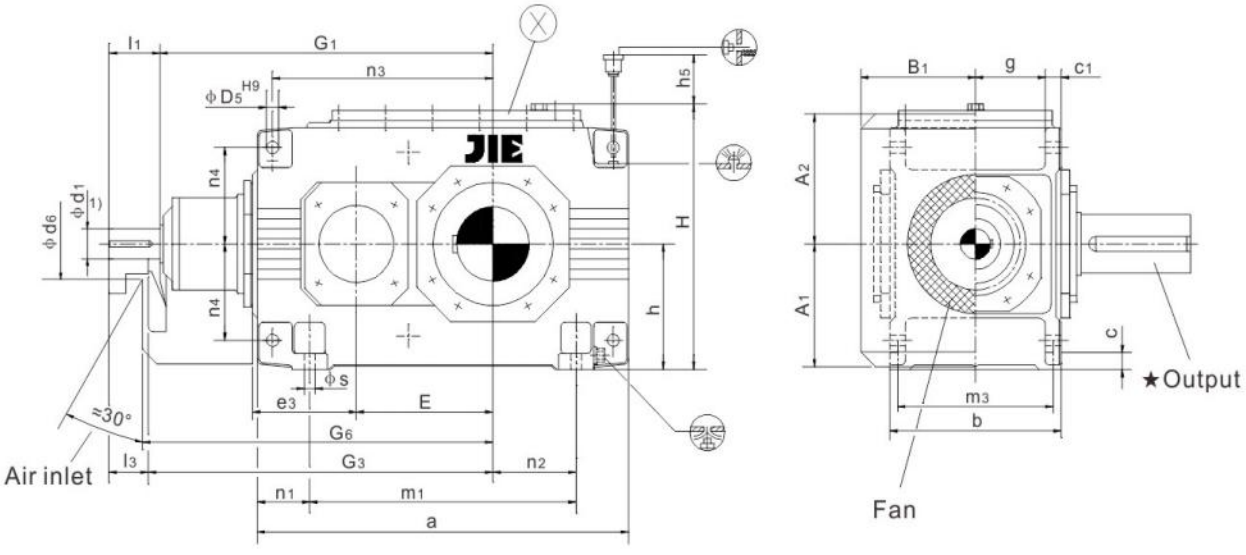

★Output			Design
JRHB2SH Solid shaft	JRHB2HH Hollow shaft	JRHB2DH Hollow shaft for shrink disk	
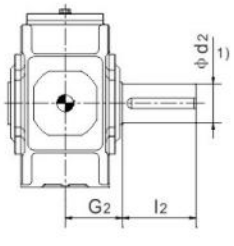	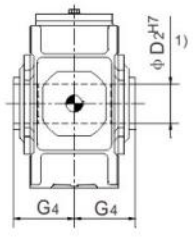	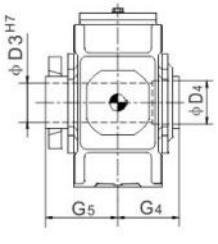	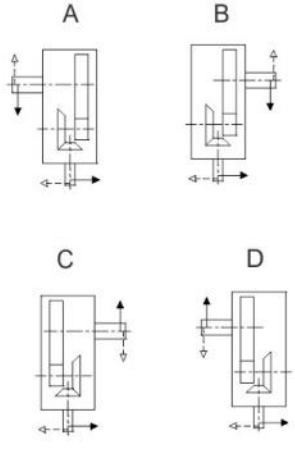

1)m6≤ ϕ100;n6> ϕ100
Keyway、Hubkeyway、Parallel key,see pages 98–99.

Bevel-helical gear Units
Two Stage Horizontal
Type JRHB2.H Sizes 4-12





Size	Dimension (mm)							
	Input							
	i_N=5-11.2			i_N=6.3-14			G_1	G_3
	d_1	l_1	l_3	d_1	l_1	l_3		
4	45	100	80				465	485
5	55	110	80				535	565
6				55	110	80	570	600
7	70	135	105				640	670
8				70	135	105	685	715
9	80	165	130				755	790
10				80	165	130	805	840
11	90	165	130				925	960
12				90	165	130	995	1030

Size	Dimension (mm)										
	Gear Units										
	a	A_1	A_2	b	B_1	c	c_1	D_5	d_6	e_3	E	g
4	515	195	200	270	188	28	30 ± 1	24	150	160	160	105
5	565	220	235	320	215	28	30 ± 1	24	160	185	185	130
6	645	220	235	320	215	28	30 ± 1	24	160	185	220	130
7	690	270	285	380	250	35	36 ± 1	28	210	225	225	154
8	795	270	285	380	250	35	36 ± 1	28	210	225	270	154
9	820	310	325	440	270	40	48 ± 1.5	36	195	265	265	172
10	920	310	325	440	270	40	48 ± 1.5	36	195	265	315	172
11	975	370	385	530	328	50	54 ± 1.5	40	210	320	320	211
12	1130	370	385	530	328	50	54 ± 1.5	40	210	320	390	211

Size	Dimension (mm)										
	Gear Units										
	G_6	h	h_5	H	m_1	m_3	n_1	n_2	n_3	n_4	s
4	495	200	80	400	295	235	110	85	285	150	19
5	575	230	150	482	355	285	105	100	330	180	19
6	610	230	150	482	435	285	105	145	365	180	19
7	685	280	180	582	450	340	120	130	405	215	24
8	730	280	190	582	555	340	120	190	450	215	24
9	805	320	205	662	530	390	145	155	480	245	28
10	855	320	215	662	630	390	145	205	530	245	28
11	980	380	240	790	645	470	165	180	580	300	35
12	1050	380	250	790	800	470	165	265	650	300	35

Size	Dimension (mm)									Oil (L)		Weight (kg)
	Output									Shaft seal	Labyinth seal	
	JRHB2SH			JRHB2HH		JRHB2DH						
	d_2	G_2	l_2	D_2	G_4	D_3	D_4	G_4	G_5			
4	80	170	170	80	170	85	85	170	235	10	-	235
5	100	200	210	95	200	100	100	200	275	16	14	360
6	110	200	210	105	200	110	110	200	275	19	15	410
7	120	235	210	115	235	120	120	235	320	31	28	615
8	130	235	250	125	235	130	130	235	325	34	29	700
9	140	270	250	135	270	140	145	270	365	48	38	1000
10	160	270	300	150	270	150	155	270	385	50	40	1155
11	170	320	300	165	320	165	170	320	450	80	65	1640
12	180	320	300	180	320	180	185	320	455	95	71	1910

Bevel-helical gear units
Two Stage Horizontal
Type JRHB2.H JRHB2.M Sizes 13-18

JRHB2SH JRHB2HH JRHB2DH

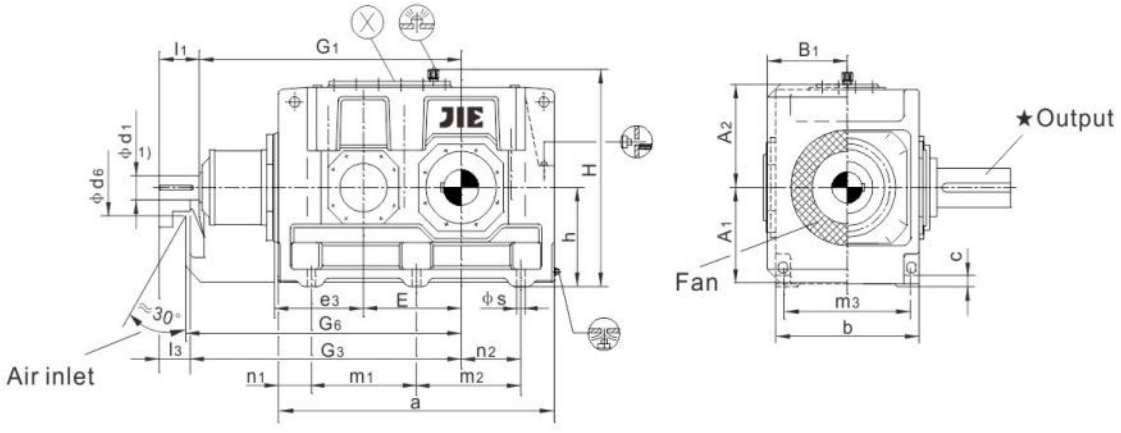

JRHB2HM JRHB2DM

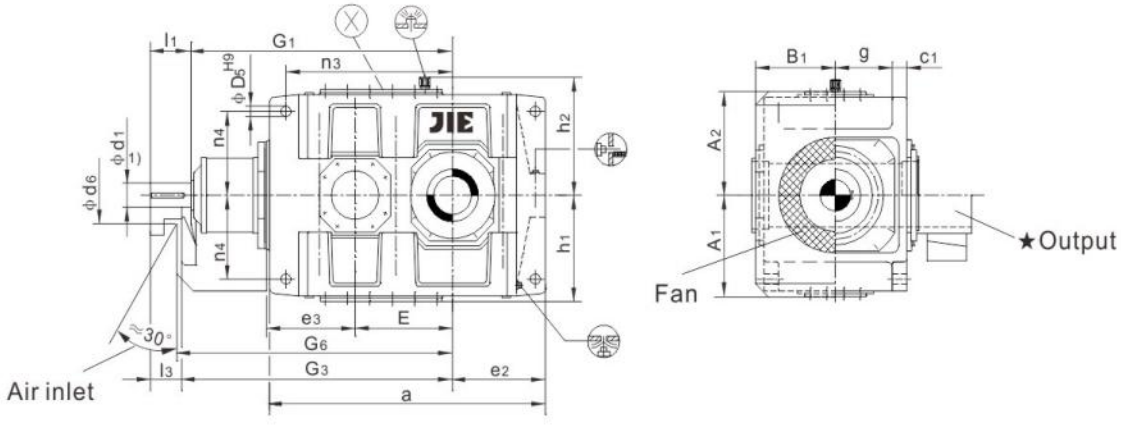

★Output			Design
JRHB2SH Solid shaft	**JRHB2HH,JRHB2HM** Hollow shaft	**JRHB2DH,JRHB2DM** Hollow shaft for shrink disk	A B C D

1)m6≤ ϕ100;n6> ϕ100
Keyway、Hubkeyway、Parallel key,see pages 98-99.

Bevel-helical gear Units
Two Stage Horizontal
Type JRHB2.H JRHB2.M Sizes 13-18





Size	Dimension (mm)																
	Input																
	i_N=5-11.2			i_N=5.6-11.2			i_N=5.6-12.5			i_N=6.3-14			i_N=7.1-12.5			G_1	G_3
	d_1	l_1	l_3	d_1	l_1	l_3	d_1	l_1	l_3	d_1	l_1	l_3	d_1	l_1	l_3		
13	110	205	165													1070	1110
14										110	205	165				1140	1180
15	130	245	200													1277	1322
16							130	245	200							1323	1368
17				150	245	200										1435	1480
18													150	245	200	1495	1540

Size	Dimension (mm)												
	Gear Units												
	a	A_1	A_2	b	B_1	c	c_1	d_6	D_5	e_2	e_3	E	g
13	1130	430	450	655	375	60	61 ± 2	245	48	405	380	370	264
14	1270	430	450	655	375	60	61 ± 2	245	48	475	380	440	264
15	1350	490	495	765	435	70	72 ± 2	280	55	485	450	442	308
16	1440	490	495	765	435	70	72 ± 2	280	55	530	450	488	308
17	1490	540	555	885	505	80	81 ± 2	380	65	525	510	490	356
18	1610	540	555	885	505	80	81 ± 2	380	65	585	510	550	356

Size	Dimension (mm)												
	Gear Units												
	G_6	h	h_1	h_2	H	m_1	m_2	m_3	n_1	n_2	n_3	n_4	s
13	1130	440	450	460	900	465	465	580	100	305	675	340	35
14	1200	440	450	460	900	465	605	580	100	375	745	340	35
15	1340	500	490	500	1000	555	555	670	120	365	805	375	42
16	1385	500	490	500	1000	555	645	670	120	410	850	375	42
17	1500	550	555	560	1110	610	610	780	135	390	895	420	48
18	1560	550	555	560	1110	610	730	780	135	450	955	420	48

Size	Dimension (mm)									Oil (L)			Weight (kg)	
	Output									JRHB2.H		JRHB2.M	JRHB2.H	JRHB2.M
	JRHB2SH			JRHB2HH JRHB2HM		JRHB2DH		JRHB2DM		Shaft seal	Labyinth seal			
	d_2	G_2	l_2	D_2	G_4	D_3	D_4	G_4	G_5					
13	200	390	350	-	-	-	-	-	-	140	125	120	2450	2350
14	210	390	350	210	390	210	215	390	535	155	140	130	2825	2725
15	230	460	410	-	-	-	-	-	-	220	195	180	3990	3795
16	240	460	410	240	450	240	245	450	620	230	205	190	4345	4160
17	250	540	410	-	-	-	-	-	-	320	280	260	5620	5320
18	270	540	470	275	510	280	285	510	700	335	300	275	6150	5860

Bevel-helical gear units
Three Stage Horizontal
Type JRHB3.H Sizes 4-12

JRHB3SH JRHB3HH JRHB3DH

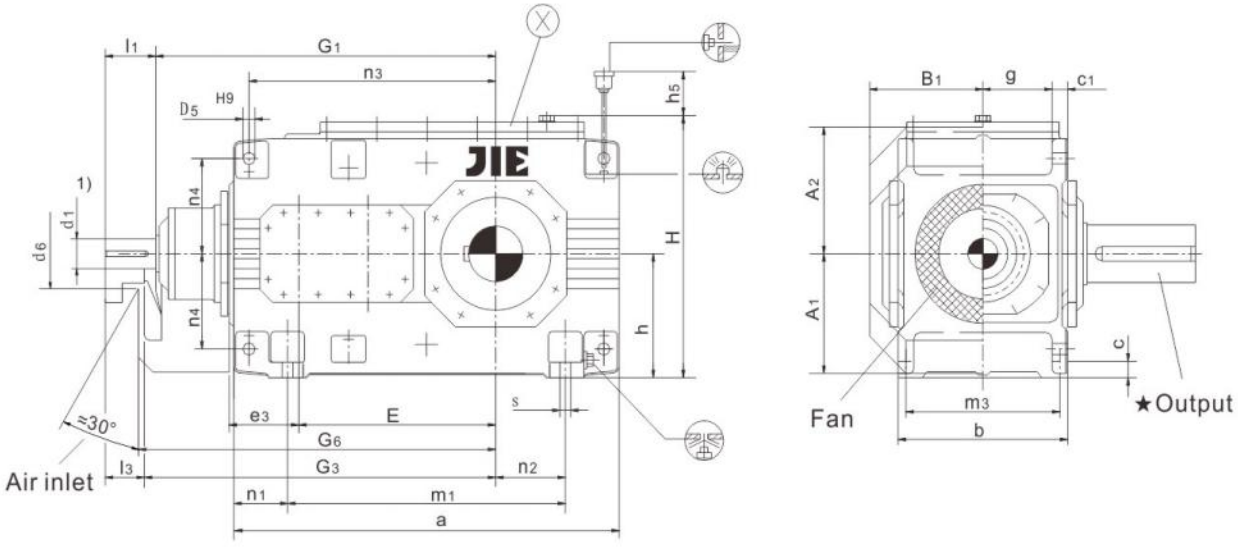

★Output			Design
JRHB3SH Solid shaft	**JRHB3HH** Hollow shaft	**JRHB3DH** Hollow shaft for shrink disk	
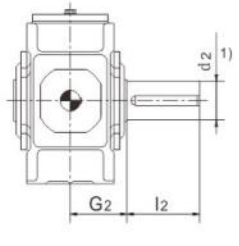	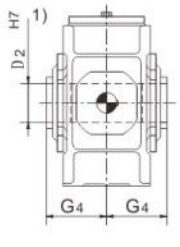	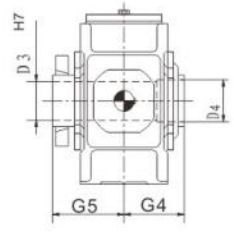	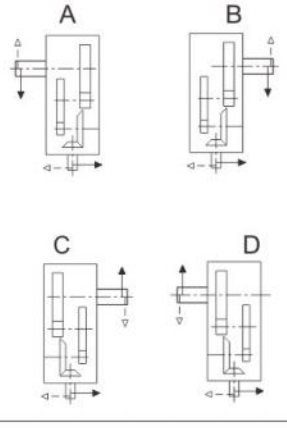

1)m6≤ ϕ 100;n6> ϕ 100
Keyway、Hubkeyway、Parallel key,see pages 98–99.

Bevel-helical gear units
Three Stage Horizontal
Type JRHB3.H Sizes 4-12



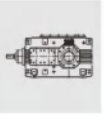

Size	Dimension (mm)													
	Input													
	i_N=12.5-45			i_N=16-56			i_N=50-71			i_N=63-90			G_1	G_3
	d_1	l_1	l_3	d_1	l_1	l_3				d_1	l_1	l_3		
4	30	70	50				25	60	40				500	520
5	35	80	60				28	60	40				575	595
6				35	80	60				28	60	40	610	630
7	45	100	80				35	80	60				690	710
8				45	100	80				35	80	60	735	755
9	55	110	80				40	100	70				800	830
10				55	110	80				40	100	70	850	880
11	70	135	105				50	110	80				960	990
12				70	135	105				50	110	80	1030	1060

Size	Dimension (mm)											
	Gear Units											
	a	A_1	A_2	b	B_1	c	c_1	d_6	D_5	e_3	E	g
4	565	195	200	215	143	28	30 ± 1	110	24	110	270	77.5
5	640	220	235	255	168	28	30 ± 1	130	24	130	315	97.5
6	720	220	235	255	168	28	30 ± 1	130	24	130	350	97.5
7	785	275	275	300	193	35	36 ± 1	165	28	160	385	114
8	890	275	275	300	193	35	36 ± 1	165	28	160	430	114
9	925	315	325	370	231	40	45 ± 1.5	175	36	185	450	140
10	1025	315	325	370	231	40	45 ± 1.5	175	36	185	500	140
11	1105	370	385	430	263	50	54 ± 1.5	190	40	225	545	161
12	1260	370	385	430	263	50	54 ± 1.5	190	40	225	615	161

Size	Dimension (mm)										
	Gear Units										
	G_6	h	h_5	H	m_1	m_3	n_1	n_2	n_3	n_4	s
4	530	200	100	415	355	180	105	85	345	150	19
5	605	230	130	482	430	220	105	100	405	180	19
6	640	230	130	482	510	220	105	145	440	180	19
7	720	280	170	572	545	260	120	130	500	215	24
8	765	280	60	582	650	260	120	190	545	215	24
9	845	320	175	662	635	320	145	155	585	245	28
10	895	320	175	662	735	320	145	205	635	245	28
11	1010	380	220	782	775	370	165	180	710	300	35
12	1080	380	210	790	930	370	165	265	780	300	35

Size	Dimension (mm)									Oil (L)	Weight (kg)
	Output										
	JRHB3SH			JRHB3HH		JRHB3DH					
	d_2	G_2	l_2	D_2	G_4	D_3	D_4	G_4	G_5		
4	80	140	170	80	140	85	85	140	205	9	210
5	100	165	210	95	165	100	100	165	240	15	325
6	110	165	210	105	165	110	110	165	240	16	380
7	120	195	210	115	195	120	120	195	280	27	550
8	130	195	250	125	195	130	130	195	285	30	635
9	140	235	250	135	235	140	145	235	330	42	890
10	160	235	300	150	235	150	155	235	350	45	1020
11	170	270	300	165	270	165	170	270	400	71	1455
12	180	270	300	180	270	180	185	270	405	76	1730

Bevel-helical gear units
Three Stage Horizontal
Type JRHB3.H JRHB3.M Sizes 13-22

JRHB3SH JRHB3HH JRHB3DH

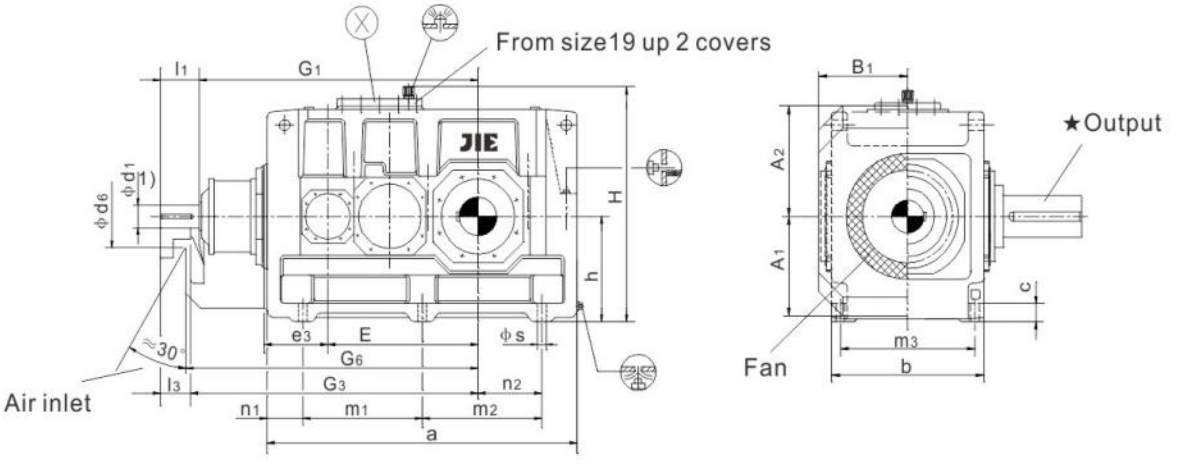

JRHB3HM JRHB3DM

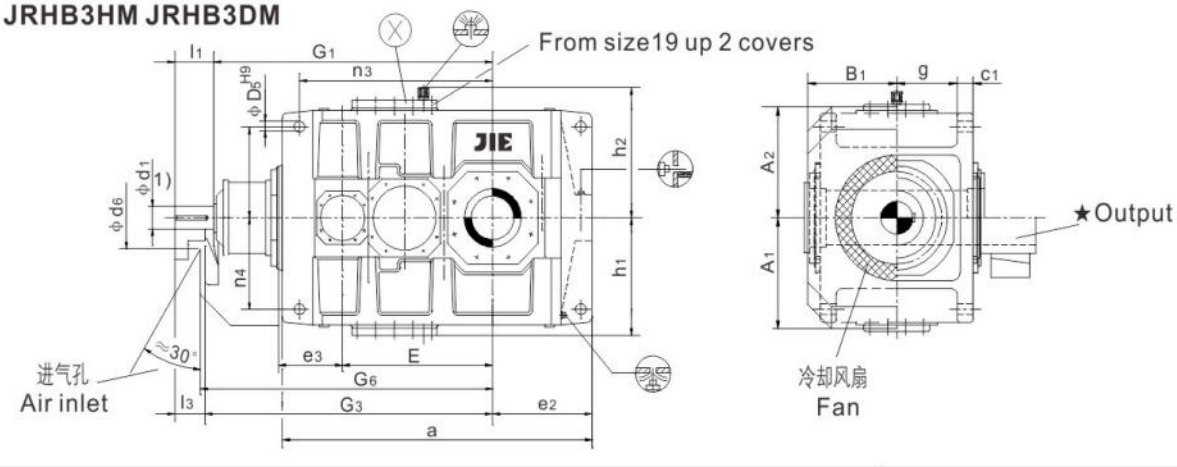

★Output			Design
JRHB3SH Solid shaft	**JRHB3HH,JRHB3HM** Hollow shaft	**JRHB3DH,JRHB3DM** Hollow shaft for shrink disk	

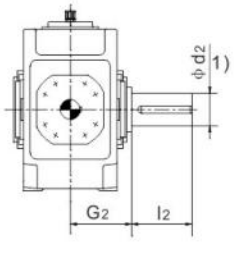

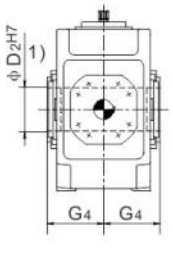

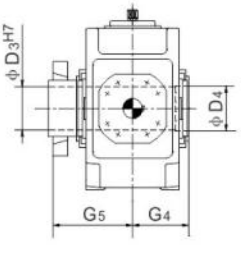

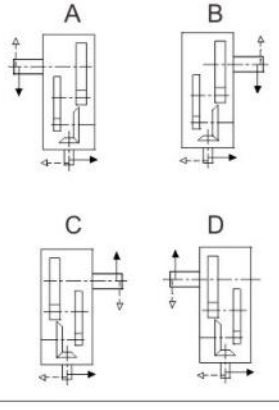

1)m6≤ ϕ100;n6> ϕ100
Keyway、Hubkeyway、Parallel key,see pages 98–99.

Bevel-helical gear units
Three Stage Horizontal
Type JRHB3.H JRHB3.M Sizes 13-22





Size	Dimension (mm)																			
	Input																			
	i_N=12.5-45			i_N=14-50			i_N=16-56			i_N=50-71			i_N=56-80			i_N=63-90			G_1	G_3
	d_1	l_1	l_3	d_1	l_1	l_3	d_1	l_1	l_3	d_1	l_1	l_3	d_1	l_1	l_3	d_1	l_1	l_3		
13	80	165	130							60	140	105							1125	1160
14							80	165	130							60	140	105	1195	1230
15	90	165	130							70	140	105							1367	1402
16				90	165	130							70	140	105				1413	1448
17	110	205	165							80	170	130							1560	1600
18				110	205	165							80	170	130				1620	1660
19	130	245	200							100	210	165							1832	1877
20				130	245	200							100	210	165				1892	1937
21	130	245	200							100	210	165							1902	1947
22				130	245	200							100	210	165				1957	2002

Size	Dimension (mm)												
	Gear Units												
	a	A_1	A_2	b	B_1	c	c_1	d_6	D_5	e_2	e_3	E	g
13	1290	425	475	550	325	60	61 ± 2	210	48	405	265	635	211.5
14	1430	425	475	550	325	60	61 ± 2	210	48	475	265	705	211.5
15	1550	485	520	625	365	70	72 ± 2	210	55	485	320	762	238
16	1640	485	520	625	365	70	72 ± 2	210	55	530	320	808	238
17	1740	535	570	690	395	80	81 ± 2	230	55	525	370	860	259
18	1860	535	570	690	395	80	81 ± 2	230	55	585	370	920	259
19	2010	610	630	790	448	90	91 ± 2	245	65	590	420	997	299
20	2130	610	630	790	448	90	91 ± 2	245	65	650	420	1057	299
21	2140	690	690	830	473	100	100 ± 2	280	75	655	450	1067	310
22	2250	690	690	830	473	100	100 ± 2	280	75	710	450	1122	310

Size	Dimension (mm)												
	Gear Units												
	G_6	h	h_1	h_2	H	m_1	m_2	m_3	n_1	n_2	n_3	n_4	s
13	1180	440	450	460	900	545	545	475	100	305	835	340	35
14	1250	440	450	460	900	545	685	475	100	375	905	340	35
15	1420	500	490	500	1000	655	655	535	120	365	1005	375	42
16	1470	500	490	500	1000	655	745	535	120	410	1050	375	42
17	1620	550	555	560	1110	735	735	600	135	390	1145	425	42
18	1680	550	555	560	1110	735	855	600	135	450	1205	425	42
19	1900	620	615	620	1240	850	850	690	155	435	1345	475	48
20	1960	620	615	620	1240	850	970	690	155	495	1405	475	48
21	1970	700	685	690	1390	900	900	720	170	485	1400	520	56
22	2025	700	685	690	1390	900	1010	720	170	540	1455	520	56

Size	Dimension (mm)									Oil (L)		Weight (kg)	
	Output												
	JRHB3SH			JRHB3HH JRHB3HM		JRHB3DH JRHB3DM				JRHB3.H	JRHB3.M	JRHB3.H	JRHB3.M
	d_2	G_2	l_2	D_2	G_4	D_3	D_4	G_4	G_5				
13	200	335	350	190	335	190	195	335	480	130	110	2380	2260
14	210	335	350	210	335	210	215	335	480	140	115	2750	2615
15	230	380	410	230	380	230	235	380	550	210	160	3730	3540
16	240	380	410	240	380	240	245	380	550	220	165	3955	3765
17	250	415	410	250	415	250	260	415	600	290	230	4990	4760
18	270	415	470	275	415	280	285	415	600	300	235	5495	5240
19	290	465	470	-	-	285	295	465	670	380	360	7000	6500
20	300	465	500	-	-	310	315	465	670	440	420	8100	7600
21	320	490	500	-	-	330	335	490	715	370	420	9200	8600
22	340	490	500	-	-	340	345	490	725	430	490	9900	9400

Bevel-helical gear units
Three Stage Horizontal
Type JRHB3.H JRHB3.M Sizes 23-28

JRHB3SH JRHB3HH JRHB3DH

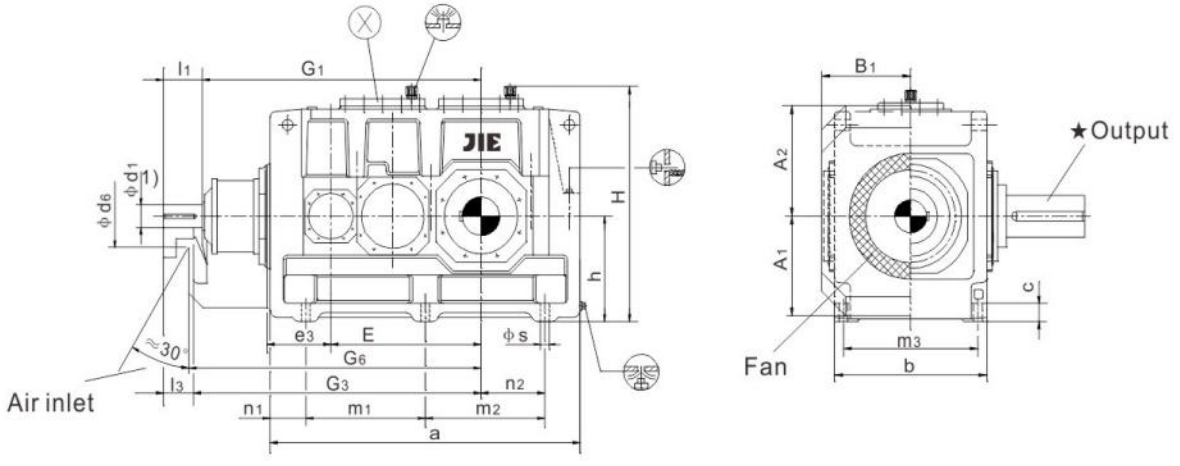

JRHB3HM JRHB3DM

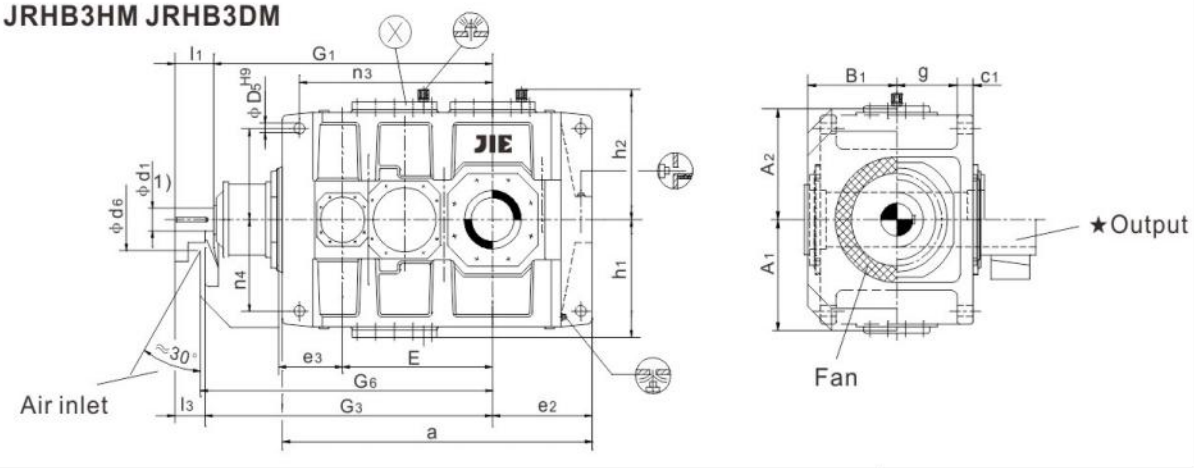

★Output			Design
JRHB3SH Solid shaft	**JRHB3HH,JRHB3HM** Hollow shaft	**JRHB3DH,JRHB3DM** Hollow shaft for shrink disk	
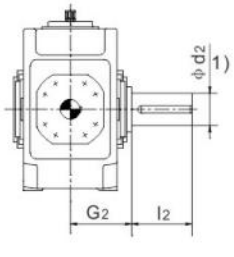	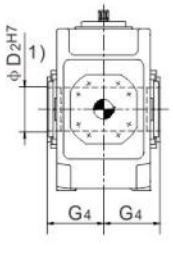	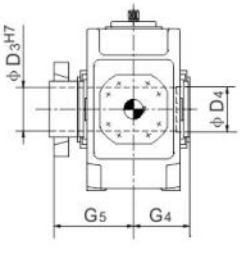	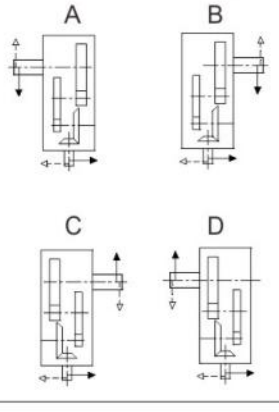

1)m6≤ ϕ100;n6> ϕ100
Keyway、Hubkeyway、Parallel key,see pages 98-99.

Bevel-helical gear units
Three Stage Horizontal
Type JRHB3.H JRHB3.M Sizes 23-28



Size	Dimension (mm)																									
	Input																								G_1	G_3
	i_N=20-40			i_N=22.4-45			i_N=20-45			i_N=22.4-50			i_N=45-71			i_N=50-80			i_N=50-71			i_N=56-80				
	d_1	l_1	l_3	d_1	l_1	l_3	d_1	l_1	l_3	d_1	l_1	l_3	d_1	l_1	l_3	d_1	l_1	l_3	d_1	l_1	l_3	d_1	l_1	l_3		
23							150	245	200										110	210	165				2130	2175
24										150	245	200										110	210	165	2195	2240
25	160	295	240										120	220	165										2375	2430
26				160	295	240										120	220	165							2465	2520
27	180	295	240										130	255	200										2625	2680
28				180	295	240										130	255	200							2720	2775

Size	Dimension (mm)													
	Gear Units													
	a	b	A_1	A_2	b	B_1	c	c_1	d_6	D_5	e_2	e_3	E	g
23	2380	930	720	720	930	515	115	120±2	382	80	720	490	1185	342
24	2510	930	720	720	930	515	115	120±2	382	80	795	490	1250	342
25	2645	1045	790	790	1045	575	130	120±2	414	90	790	555	1325	400
26	2825	1045	790	790	1045	575	130	120±2	414	90	880	555	1415	400
27	2960	1170	870	870	1170	640	150	140±2	446	100	880	625	1485	440
28	3150	1170	870	870	1170	640	150	140±2	446	100	975	625	1580	440

Size	Dimension (mm)												
	Gear Units												
	G_6	h	h_1	h_2	H	m_1	m_2	m_3	n_1	n_2	n_3	n_4	s
23	2208	780	765	785	1565	1010	1010	810	180	550	1560	580	56
24	2273	780	765	785	1565	1010	1140	810	180	615	1625	580	56
25	2435	860	860	880	1740	1155	1090	910	200	590	1750	660	66
26	2525	860	860	880	1740	1155	1270	910	200	680	1840	660	66
27	2688	950	930	950	1900	1260	1260	1030	220	660	2000	720	74
28	2783	950	930	950	1900	1260	1450	1030	220	755	2095	720	74

Size	Dimension (mm)							Oil (L)		Weight (kg)	
	Output										
	JRHB3SH			JRHB3DH JRHB3DM				JRHB3.H	JRHB3.M	JRHB3.H	JRHB3.M
	d_2	G_2	l_2	D_3	D_4	G_4	G_5				
23	360	540	590	370	375	540	800	520	560	12000	11400
24	380	540	590	390	395	540	820	600	650	13400	12700
25	400	605	650	410	415	610	895	760	830	16100	15300
26	420	605	650	430	435	610	925	880	960	18000	17000
27	440	680	690	460	465	680	1000	1050	1150	22700	21700
28	460	680	750	470	475	680	1020	1220	1340	25700	24400

Bevel-helical gear units
Four Stage Horizontal
Type JRHB4.H Sizes 5-12

JRHB4SH JRHB4HH JRHB4DH

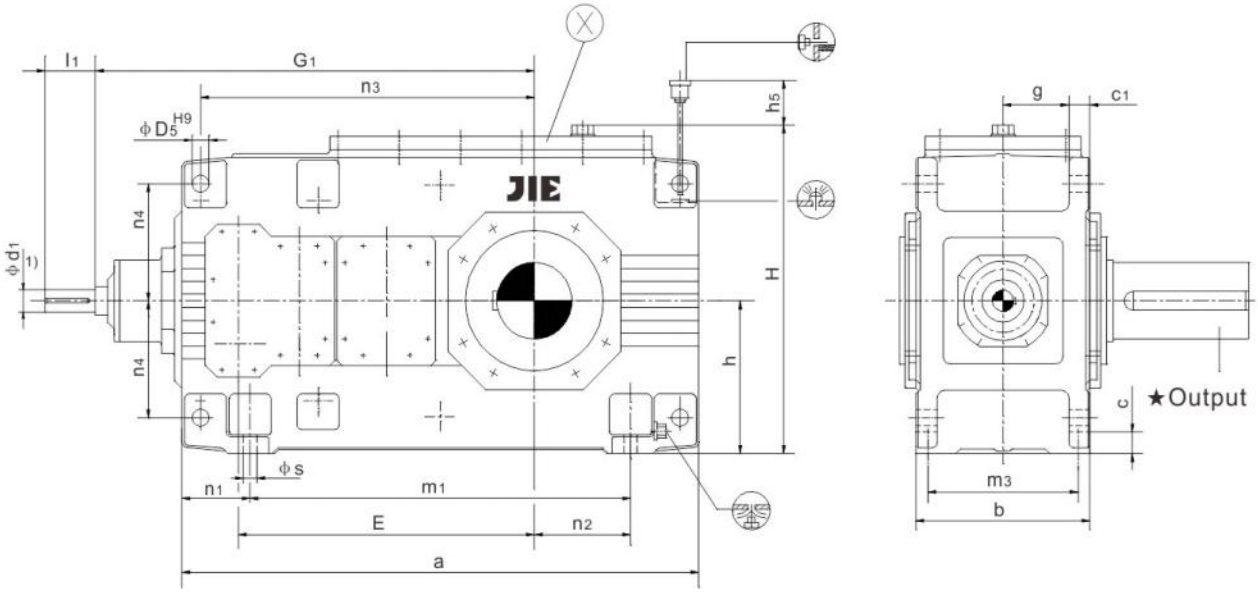

★Output			Design
JRHB4SH Solid shaft	**JRHB4HH** Hollow shaft	**JRHB4DH** Hollow shaft for shrink disk	
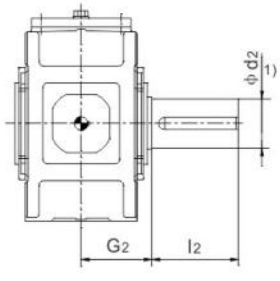	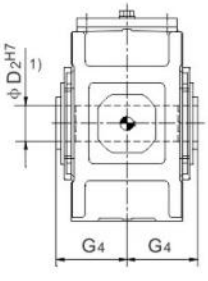	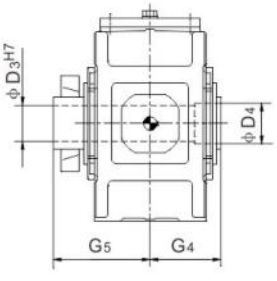	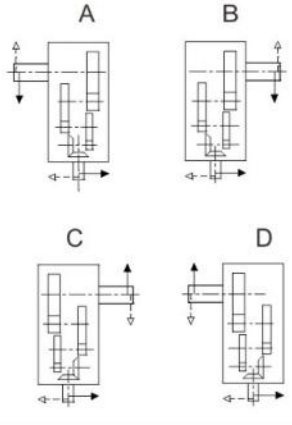

1)m6≤ϕ100;n6>ϕ100
Keyway、Hubkeyway、Parallel key,see pages 98–99.

Bevel-helical gear units
Four Stage Horizontal
Type JRHB4.H Sizes 5-12





Size	Dimension (mm)								
	Input								
	i_N=80-180		i_N=100-224		i_N=200-315		i_N=250-400		G_1
	d_1	l_1	d_1	l_1	d_1	l_1	d_1	l_1	
5	28	55			20	50			615
6			28	55			20	50	650
7	30	70			25	60			725
8			30	70			25	60	770
9	35	80			28	60			840
10			35	80			28	60	890
11	45	100			35	80			1010
12			45	100			35	80	1080

Size	Dimension (mm)																
	Gear Units																
	a	b	c	c_1	D_5	E	g	h	h_5	H	m_1	m_3	n_1	n_2	n_3	n_4	s
5	690	255	28	30±1	24	405	97.5	230	100	482	480	220	105	100	455	180	19
6	770	255	28	30±1	24	440	97.5	230	100	482	560	220	105	145	490	180	19
7	845	300	35	36±1	28	495	114	280	140	572	605	260	120	130	560	215	24
8	950	300	35	36±1	28	540	114	280	130	582	710	260	120	190	605	215	24
9	1000	370	40	45±1.5	36	580	140	320	135	662	710	320	145	155	660	245	28
10	1100	370	40	45±1.5	36	630	140	320	135	662	810	320	145	205	710	245	28
11	1200	430	50	54±1.5	40	705	161	380	170	782	870	370	165	180	805	300	35
12	1355	430	50	54±1.5	40	775	161	380	160	790	1025	370	165	265	875	300	35

Size	Dimension (mm)									Oil (L)	Weight (kg)
	Output										
	JRHB4SH			JRHB4HH		JRHB4DH					
	d_2	G_2	l_2	D_2	G_4	D_3	D_4	G_4	G_5		
5	100	165	210	95	165	100	100	165	240	16	335
6	110	165	210	105	165	110	110	165	240	18	385
7	120	195	210	115	195	120	120	195	280	30	555
8	130	195	250	125	195	130	130	195	285	33	655
9	140	235	250	135	235	140	145	235	330	48	890
10	160	235	300	150	235	150	155	235	350	50	1025
11	170	270	300	165	270	165	170	270	400	80	1485
12	180	270	300	180	270	180	185	270	405	90	1750

Bevel-helical gear units
Four Stage Horizontal
Type JRHB4.H JRHB4.M Sizes 13-22

JRHB4SH JRHB4HH JRHB4DH

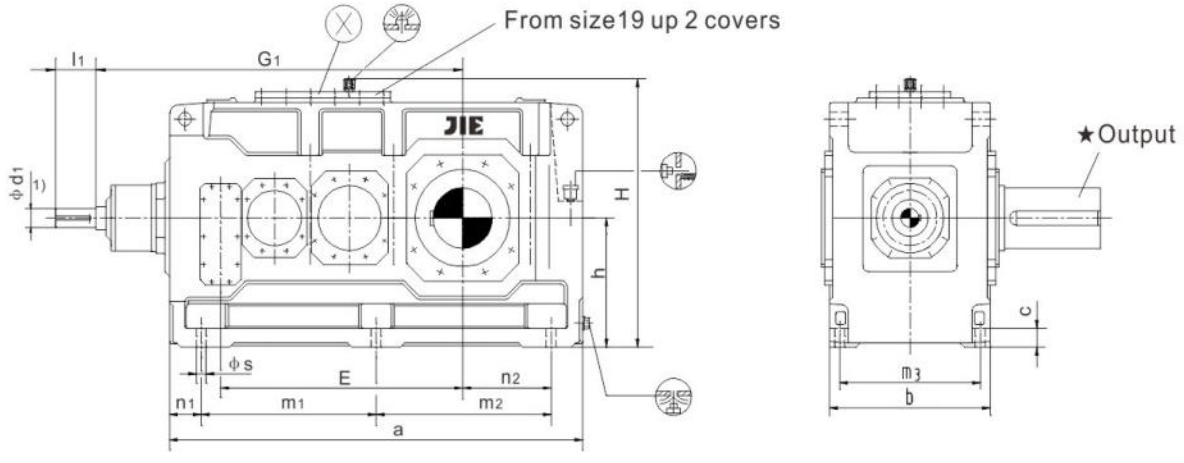

JRHB4HM JRHB4DM

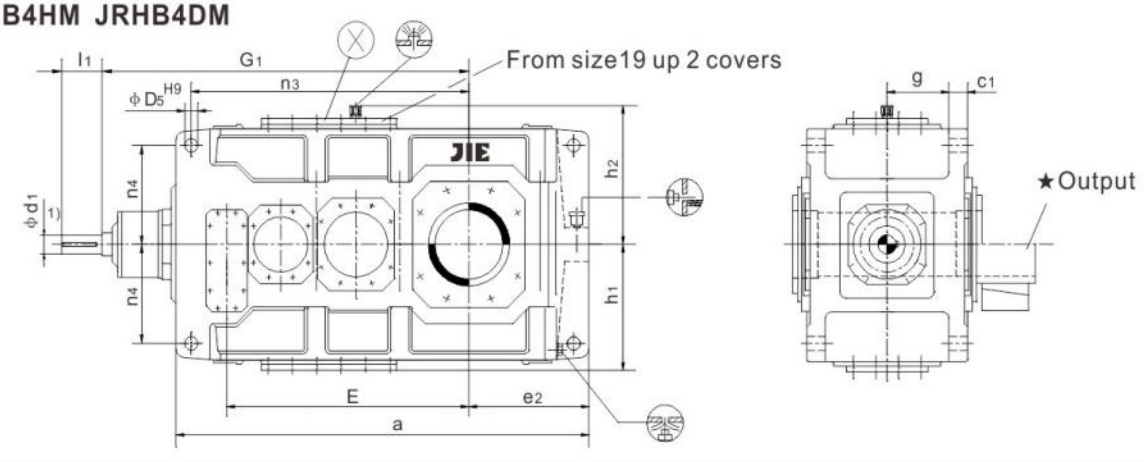

★Output			Design
JRHB4SH Solid shaft	**JRHB4HH,JRHB4HM** Hollow shaft	**JRHB4DH,JRHB4DM** Hollow shaft for shrink disk	
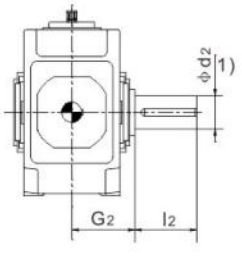	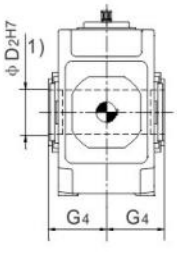	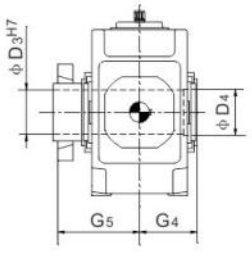	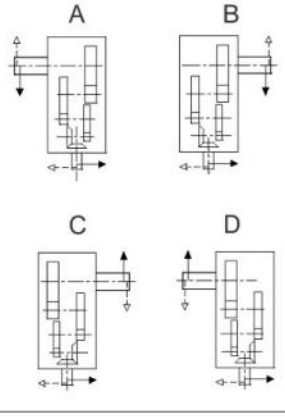

1)m6≤ ϕ100;n6> ϕ100
Keyway、Hubkeyway、Parallel key,see pages 98-99.

Bevel-helical gear units
Four Stage Horizontal
Type JRHB4.H JRHB4.M Sizes 13-22





Size	Dimension (mm)												
	Input												
	i_N=80-180		i_N=90-200		i_N=100-224		i_N=200-315		i_N=224-355		i_N=250-400		G_1
	d_1	l_1	d_1	l_1	d_1	l_1	d_1	l_1	d_1	l_1	d_1	l_1	
13	55	110					40	100					1170
14					55	110					40	100	1240
15	70	135					50	110					1402
16			70	135					50	110			1448
17	70	135					50	110					1450
18			70	135					50	110			1510
19	80	165					60	140					1680
20			80	165					60	140			1740
21	90	165					70	140					1992
22			90	165					70	140			2047

Size	Dimension (mm)									
	Gear Units									
	a	b	c	c_1	D_5	e_2	E	g	h	h_1
13	1395	550	60	61±2	48	405	820	211.5	440	450
14	1535	550	60	61±2	48	475	890	211.5	440	450
15	1680	625	70	72±2	55	485	987	238	500	490
16	1770	625	70	72±2	55	530	1033	238	500	490
17	1770	690	80	81±2	55	525	1035	259	550	555
18	1890	690	80	81±2	55	585	1095	259	550	555
19	2030	790	90	91±2	65	590	1190	299	620	615
20	2150	790	90	91±2	65	650	1250	299	620	615
21	2340	830	100	100±2	75	655	1387	310	700	685
22	2450	830	100	100±2	75	710	1442	310	700	685

规格 Size	Dimension (mm)									
	Gear Units									
	h_2	H	m_1	m_2	m_3	n_1	n_2	n_3	n_4	s
13	460	900	597.5	597.5	475	100	305	940	340	35
14	460	900	597.5	737.5	475	100	375	1010	340	35
15	500	1000	720	720	535	120	365	1135	375	42
16	500	1000	720	810	535	120	410	1180	375	42
17	560	1110	750	750	600	135	390	1175	425	42
18	560	1110	750	870	600	135	450	1235	425	42
19	620	1240	860	860	690	155	435	1365	475	48
20	620	1240	860	980	690	155	495	1425	475	48
21	690	1390	1000	1000	720	170	485	1600	520	56
22	690	1390	1000	1110	720	170	540	1655	520	56

Size	Dimension (mm)									Oil (L)		Weight (kg)	
	Output												
	JRHB4SH			JRHB4HH JRHB4HM		JRHB4DH		JRHB4DM		JRHB4.H	JRHB4.M	JRHB4.H	JRHB4.M
	d_2	G_2	l_2	D_2	G_4	D_3	D_4	G_4	G_5				
13	200	335	350	190	335	190	195	335	480	145	120	2395	2280
14	210	335	350	210	335	210	215	335	480	150	125	2735	2605
15	230	380	410	230	380	230	235	380	550	230	170	3630	3435
16	240	380	410	240	380	240	245	380	550	235	175	3985	3765
17	250	415	410	250	415	250	260	415	600	295	230	4695	4460
18	270	415	470	275	415	280	285	415	600	305	235	5200	4930
19	290	465	470	-	-	285	295	465	670	480	440	6800	6300
20	300	465	500	-	-	310	315	465	670	550	510	8200	7700
21	320	490	500	-	-	330	335	490	715	540	590	9200	8600
22	340	490	500	-	-	340	345	490	725	620	680	9900	9400

Bevel-helical gear units
Four Stage Horizontal
Type JRHB4.H JRHB4.M Sizes 23-28

JRHB4SH JRHB4HH JRHB4DH

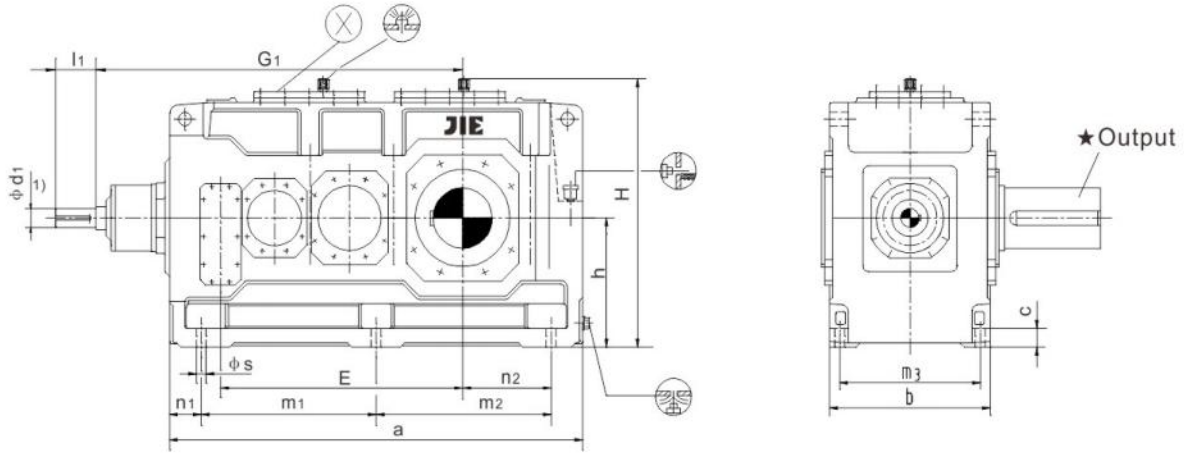

JRHB4HM JRHB4DM

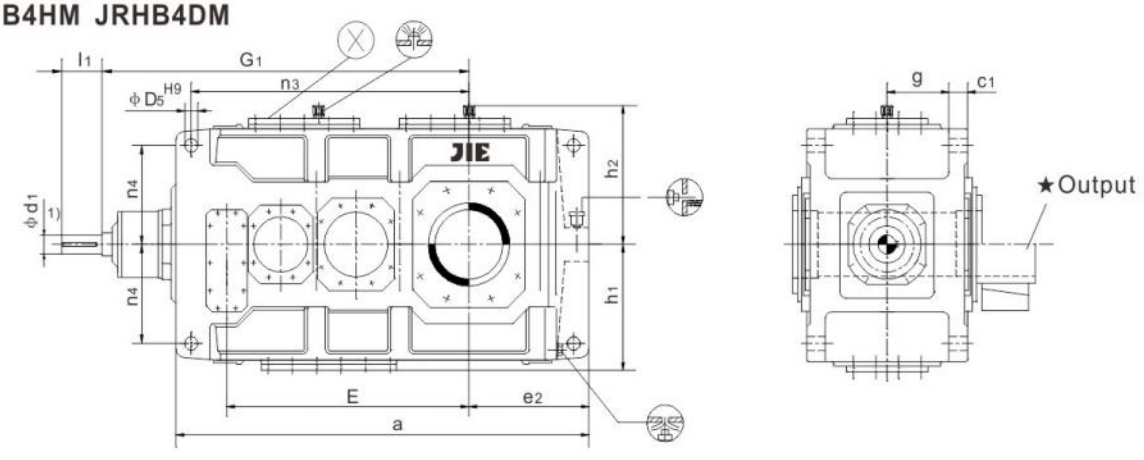

★Output			Design
JRHB4SH Solid shaft	**JRHB4HH,JRHB4HM** Hollow shaft	**JRHB4DH,JRHB4DM** Hollow shaft for shrink disk	
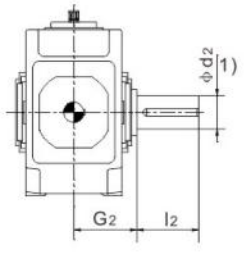	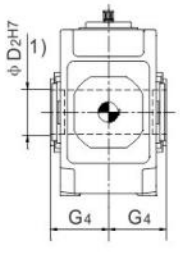	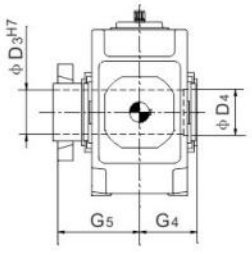	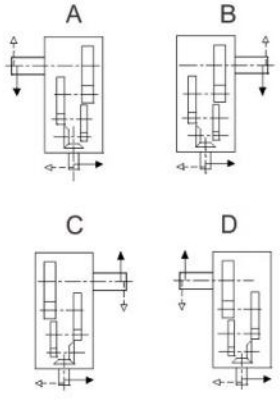

1)m6≤ ϕ100;n6> ϕ100
Keyway、Hubkeyway、Parallel key,see pages 98–99.

Bevel-helical gear units
Four Stage Horizontal
Type JRHB4.H JRHB4.M Sizes 23-28





Size	Dimension (mm)								
	Input								
	i_N=80-160		i_N=90-180		i_N=180-315		i_N=200-355		G_1
	d_1	l_1	d_1	l_1	d_1	l_1	d_1	l_1	
23	90	165			70	140			2110
24			90	165			70	140	2175
25	110	205			80	170			2395
26			110	205			80	170	2485
27	130	245			100	210			2762
28			120	245			100	210	2857

Size	Dimension (mm)									
	Gear Units									
	a	b	c	c_1	D_5	e_2	E	g	h	h_1
23	2530	930	115	120±2	80	730	1505	342	780	765
24	2660	930	115	120±2	80	795	1570	342	780	765
25	2830	1045	130	120±2	90	790	1695	400	860	860
26	3010	1045	130	120±2	90	880	1785	400	860	860
27	3220	1170	150	145±2	100	880	1927	440	950	930
28	3410	1170	150	145±2	100	975	2022	440	950	930

Size	Dimension (mm)									
	Gear Units									
	h_2	H	m_1	m_2	m_3	n_1	n_2	n_3	n_4	s
23	785	1565	1085	1085	810	180	550	1725	580	56
24	785	1565	1085	1215	810	180	615	1790	580	56
25	880	1740	1215	1215	910	200	590	1965	660	66
26	880	1740	1215	1395	910	200	680	2055	660	66
27	950	1900	1390	1390	1030	220	660	2260	720	74
28	950	1900	1390	1580	1030	220	755	2355	720	74

Size	Dimension (mm)							Oil (L)		Weight (kg)	
	Output							JRHB4.H	JRHB4.M	JRHB4.H	JRHB4.M
	JRHB4SH			JRHB4DH JRHB4DM							
	d_2	G_2	l_2	D_3	D_4	G_4	G_5				
23	360	540	590	370	375	540	800	710	790	12000	11400
24	380	540	590	390	395	540	820	810	910	13500	12800
25	400	605	650	410	415	610	895	1000	1110	16300	15500
26	420	605	650	430	435	610	925	1150	1280	18000	17100
27	440	680	690	460	465	680	1000	1430	1590	23000	22000
28	460	680	750	470	475	680	1020	1580	1750	26200	25000

Helical gear units
Two Stage Vertical
Type JRHH2.V Sizes 4-12

JRHH2SV JRHH2HV JRHH2DV
Dip Lubrication

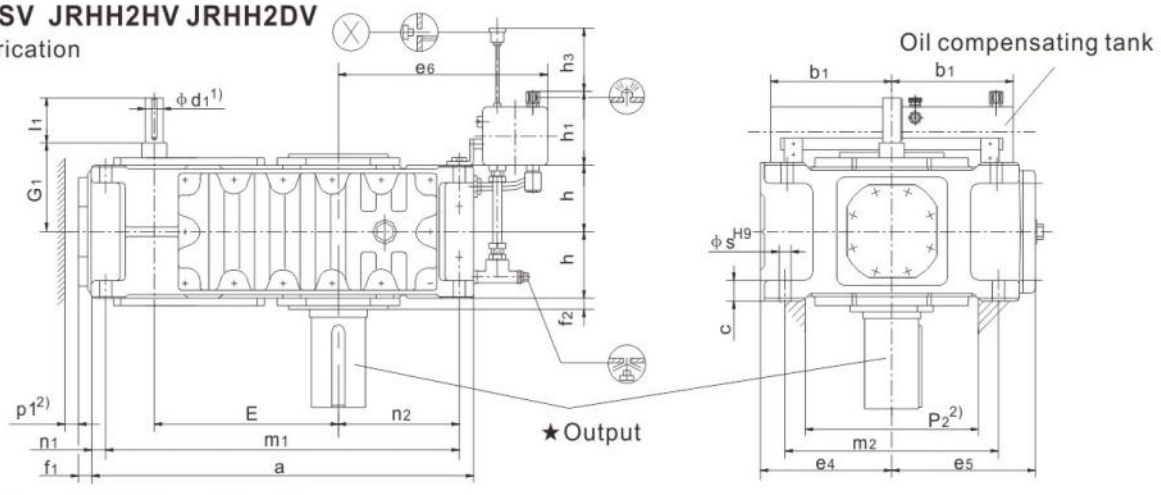

JRHH2SV JRHH2HV JRHH2DV
Forced Lubrication

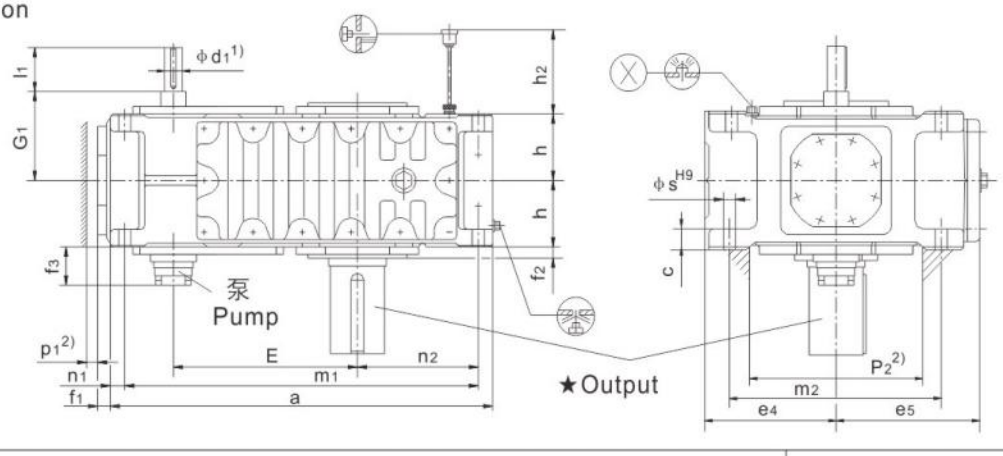

★Output			Design
JRHH2SV Solid shaft	**JRHH2HV** Hollow shaft	**JRHH2DV** Hollow shaft for shrink disk	
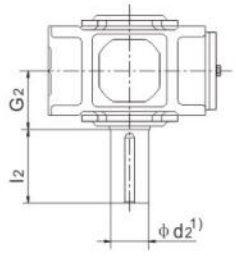	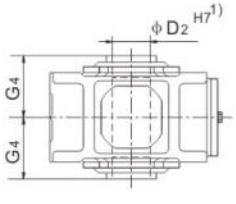	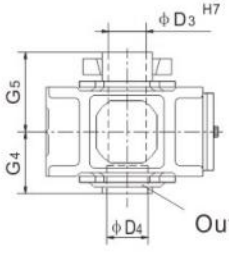 A、D designs on request	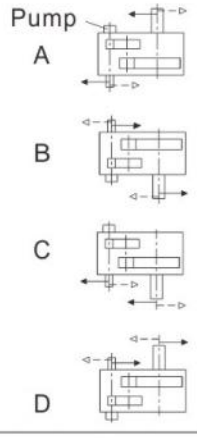

1)m6≤ ϕ100;n6> ϕ100
Keyway、Hubkeyway、Parallel key,see pages 98–99.
2) Space for pump, pipes and cover. for exact dimensions, please refer to JIE.

Helical gear units
Two Stage Vertical
Type JRHH2.V Sizes 4-12





Size	Dimension (mm)								
	Input								
	i_N=6.3-11.2		i_N=8-14		i_N=12.5-22.4		i_N=16-28		G_1
	d_1	l_1	d_1	l_1	d_1	l_1	d_1	l_1	
4	48	100			48	100			140
5	50	100			38	80			195
6			50	100			38	80	195
7	60	135			50	110			210
8			60	135			50	110	210
9	75	140			60	140			240
10			75	140			60	140	240
11	90	165			70	140			275
12			90	165			70	140	275

Size	Dimension (mm)									
	Gear Units									
	a	b_1	c	e_4	e_5	e_6	E	f_1	f_2	f_3
4	565	150	30±1	200	215	320	270	28	22	-
5	640	240	30±1	230	252	385	315	38	28	150
6	720	240	30±1	230	252	425	350	38	28	150
7	785	240	36±1	280	292	425	385	42	30	145
8	890	240	36±1	280	302	485	430	42	32	145
9	925	330	45±1.5	320	342	560	450	42	32	135
10	1025	330	45±1.5	320	342	610	500	42	32	135
11	1105	330	54±1.5	380	402	595	545	48	35	145
12	1260	330	54±1.5	380	410	680	615	48	35	145

Size	Dimension (mm)										
	Gear Units										
	h	h_1	h_2	h_3	m_1	m_2	n_1	n_2	P_1	P_2	s
4	107.5	165	-	180	505	300	30	160	35	220	24
5	127.5	205	190	240	580	360	30	175	35	270	24
6	127.5	205	190	240	660	360	30	220	35	270	24
7	150	205	165	250	715	430	35	215	35	330	28
8	150	205	165	250	820	430	35	275	35	330	28
9	185	275	205	330	845	490	40	260	40	370	36
10	185	275	205	330	945	490	40	310	40	370	36
11	215	275	240	340	1005	600	50	295	50	440	40
12	215	275	240	340	1160	600	50	380	50	440	40

Size	Dimension (mm)									Oil (L)		Weight (kg)
	Output									Dip lubrication	Forced lubrication	
	JRHH2SV			JRHH2HV		JRHH2DV						
	d_2	G_2	l_2	D_2	G_4	D_3	D_4	G_4	G_5			
4	80	140	170	80	140	85	85	140	205	23	-	190
5	100	165	210	95	165	100	100	165	240	35	17.5	300
6	110	165	210	105	165	110	110	165	240	37	18.5	355
7	120	195	210	115	195	120	120	195	280	62	31	505
8	130	195	250	125	195	130	130	195	285	69	35	590
9	140	235	250	135	235	140	145	235	330	98	49	830
10	160	235	300	150	235	150	155	235	350	110	55	960
11	170	270	300	165	270	165	170	270	400	160	80	1335
12	180	270	300	180	270	180	185	270	405	180	90	1615

Helical gear units
Two Stage Vertical
Type JRHH2.V Sizes 13-18

JRHH2SV JRHH2HV JRHH2DV

Forced Lubrication

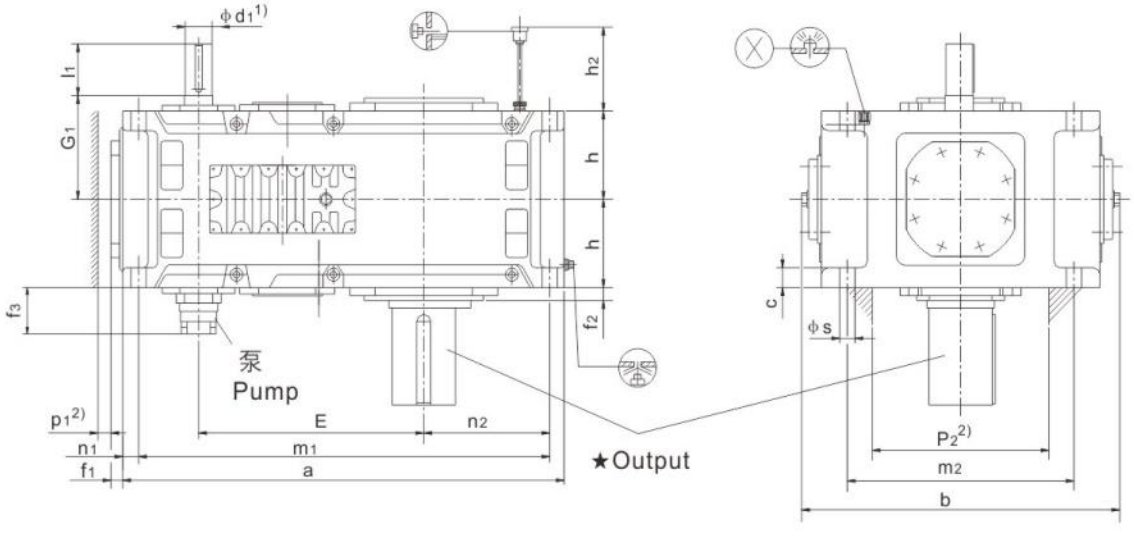

★Output			Design
JRHH2SV Solid shaft	**JRHH2HV** Hollow shaft	**JRHH2DV** Hollow shaft for shrink disk	
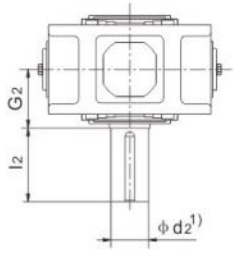	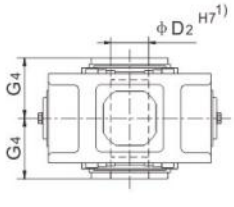	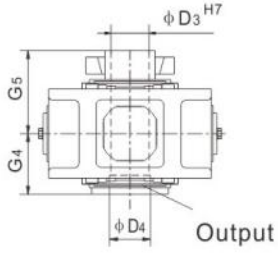	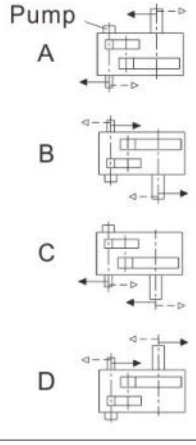
		A、D designs on request	

1)m6≤ ϕ100;n6> ϕ100
Keyway、Hubkeyway、Parallel key,see pages 98–99.
2) Space for pump, pipes and cover. for exact dimensions, please refer to JIE.
3)Sizes 13 and 15:only i_n=6.3–18 Sizes 17:only i_n=6.3–16

Helical gear units
Two Stage Vertical
Type JRHH2.V Sizes 13-18





Size	Dimension (mm)												
	Input												
	i_N=6.3-11.2		i_N=7.1-12.5		i_N=8-14		i_N=12.5-20		i_N=14-22.4		i_N=16-25		G_1
	d_1	l_1	d_1	l_1	d_1	l_1	d_1	l_1	d_1	l_1	d_1	l_1	
13	100	205					85	170					330
14					100	205					85	170	330
15	120	210					100	210					365
16			120	210					100	210			365
17	125	245					110	210					420
18			125	245					110	210			420

Size	Dimension (mm)														
	Gear Units														
	a	b	c	E	f_1	f_2	f_3	h	h_2	m_1	m_2	n_1	n_2	p_1	p_2	s
13	1290	900	61±2	635	53	35	130	272.5	300	1195	680	50	360	50	500	48
14	1430	900	61±2	705	53	35	130	272.5	300	1335	680	50	430	50	500	48
15	1550	980	72±2	762	63	42	130	310	340	1435	750	60	430	50	570	55
16	1640	980	72±2	808	63	42	130	310	340	1525	750	60	475	50	570	55
17	1740	1110	81±2	860	60	42	170	340	374	1610	850	70	465	70	630	55
18	1860	1110	81±2	920	60	42	170	340	374	1730	850	70	525	70	630	55

Size	Dimension (mm)									Oil (L)	Weight (kg)
	Output										
	JRHH2SV			JRHH2HV		JRHH2DV					
	d_2	G_2	l_2	D_2	G_4	D_3	D_4	G_4	G_5		
13	200	335	350	190	335	190	195	335	480	120	1880
14	210	335	350	210	335	210	215	335	480	135	2430
15	230	380	410	230	380	230	235	380	550	185	3240
16	240	380	410	240	380	240	245	380	550	200	3465
17	250	415	410	250	415	250	260	415	600	265	4420
18	270	415	470	275	415	280	285	415	600	285	4870

Helical gear units
Three Stage Vertical
Type JRHH3.V Sizes 5-12

JRHH3SV JRHH3HV JRHH3DV

Dip Lubrication

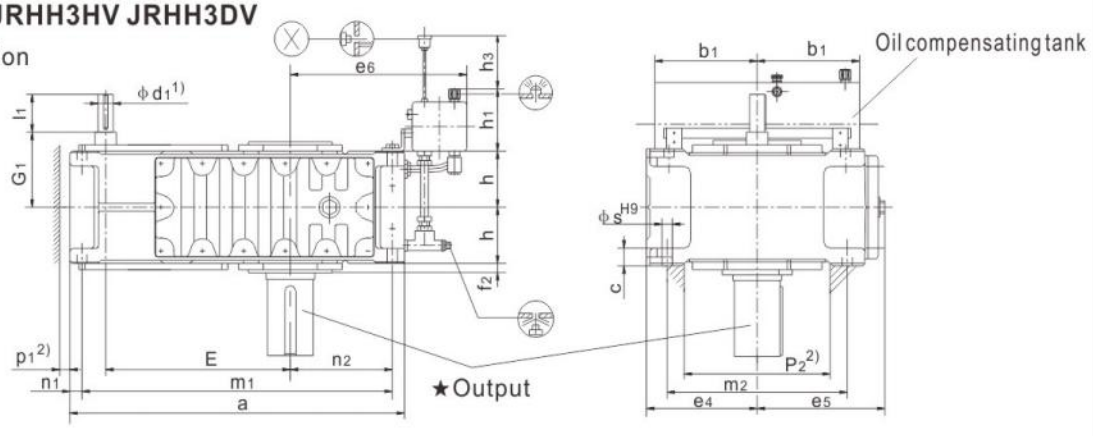

JRHH3SV JRHH3HV JRHH3DV

Forced Lubrication

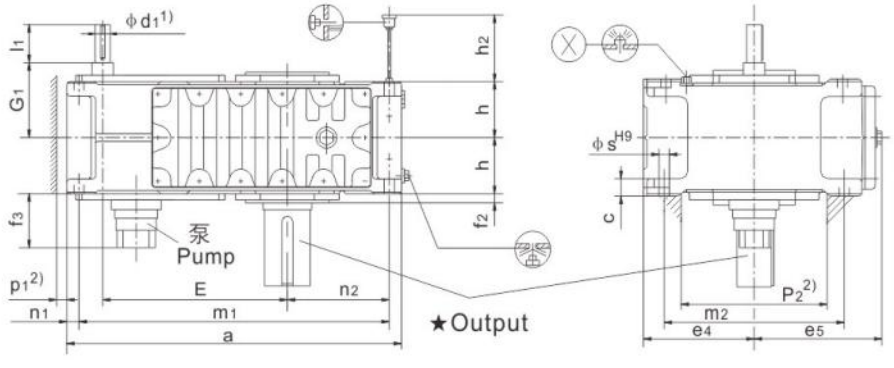

★Output			Design
JRHH3SV Solid shaft	**JRHH3HV** Hollow shaft	**JRHH3DV** Hollow shaft for shrink disk	
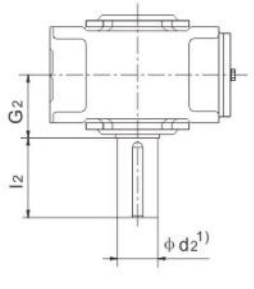	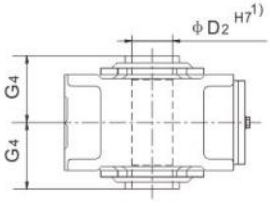	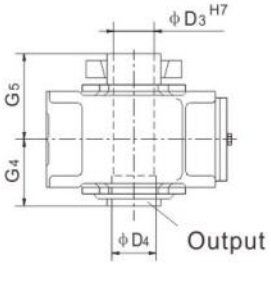 A、D designs on request	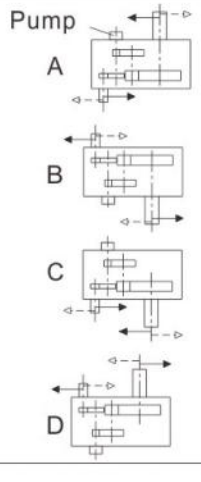 Pump A B C D

1)m6≤ ϕ100;n6> ϕ100
Keyway、Hubkeyway、Parallel key,see pages 98–99.
2)Space for pump,pipes and cover;for exact dimensions,
Please refer to JIE.

Helical gear units
Three Stage Vertical
Type JRHH3.V Sizes 5-12





Size	Dimension (mm)												
	Input												
	i_N=25-45		i_N=31.5-56		i_N=50-63		i_N=63-80		i_N=71-90		i_N=90-112		G_1
	d_1	l_1	d_1	l_1	d_1	l_1	d_1	l_1	d_1	l_1	d_1	l_1	
5	40	70			30	50			24	40			160
6			40	70			30	50			24	40	160
7	45	80			35	60			28	50			185
8			45	80			35	60			28	50	185
9	60	125			45	100			32	80			230
10			60	125			45	100			32	80	230
11	70	120			50	80			42	70			255
12			70	120			50	80			42	70	255

Size	Dimension (mm)									
	Gear Units									
	a	b_1	c	e_4	e_5	e_6	E	f_2	f_3	h
5	690	240	30±1	230	252	385	405	28	190	127.5
6	770	240	30±1	230	252	425	440	28	190	127.5
7	845	240	36±1	280	292	425	495	30	185	150
8	950	240	36±1	280	312	485	540	32	185	150
9	1000	330	45±1.5	320	342	560	580	32	170	185
10	1100	330	45±1.5	320	342	610	630	32	170	185
11	1200	330	54±1.5	380	402	595	705	35	170	215
12	1355	330	54±1.5	380	410	680	775	35	170	215

Size	Dimension (mm)									
	Gear Units									
	h_1	h_2	h_3	m_1	m_2	n_1	n_2	p_1	p_2	s
5	205	190	240	630	360	30	175	35	270	24
6	205	190	240	710	360	30	220	35	270	24
7	205	165	250	775	430	35	215	35	330	28
8	205	165	250	880	430	35	275	35	330	28
9	275	205	330	920	490	40	260	40	370	36
10	275	205	330	1020	490	40	310	40	370	36
11	275	240	340	1100	600	50	295	50	440	40
12	275	240	340	1255	600	50	380	50	440	40

Size	Dimension (mm)									Oil (L)		Weight
	Output									Dip lubrication	Forced lubrication	(kg)
	JRHH3SV			JRHH3HV		JRHB3DV						
	d_2	G_2	l_2	D_2	G_4	D_3	D_4	G_4	G_5			
5	100	165	210	95	165	100	100	165	240	36	24	320
6	110	165	210	105	165	110	110	165	240	40	27	365
7	120	195	210	115	195	120	120	195	280	64	42	540
8	130	195	250	125	195	130	130	195	285	70	47	625
9	140	235	250	135	235	140	145	235	330	110	73	875
10	160	235	300	150	235	150	155	235	350	120	80	1020
11	170	270	300	165	270	165	170	270	400	190	110	1400
12	180	270	300	180	270	180	185	270	405	205	120	1675

Helical gear units
Three Stage Vertical
Type JRHH3.V Sizes 13-18

JRHH3SV JRHH3HV JRHH3DV

Forced Lubrication

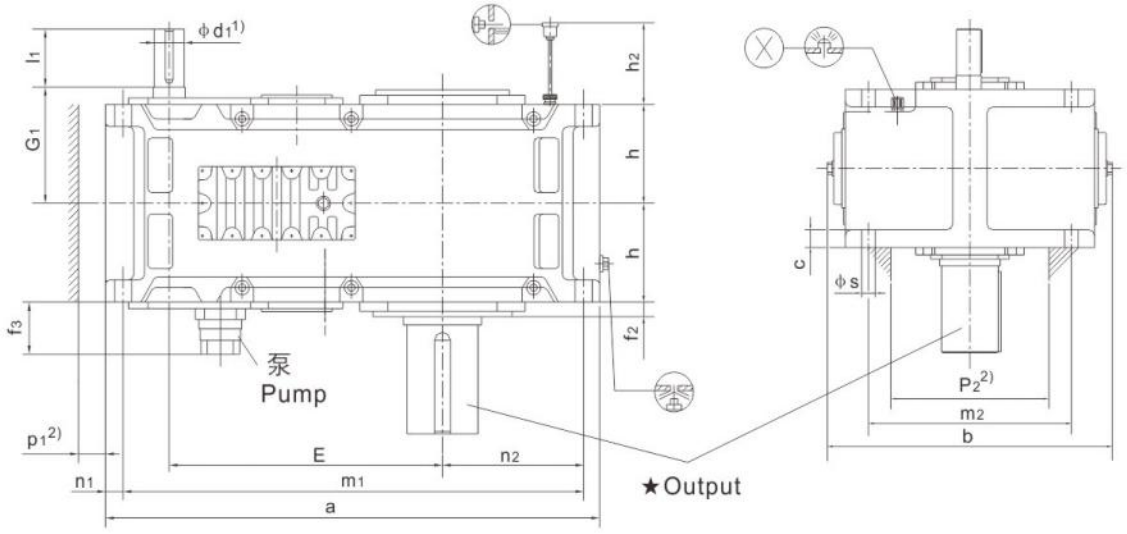

★Output			Design
JRHH3SV Solid shaft	**JRHH3HV** Hollow shaft	**JRHH3DV** Hollow shaft for shrink disk	
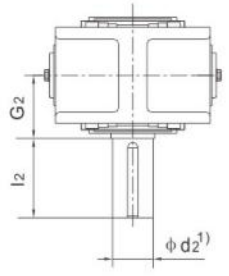	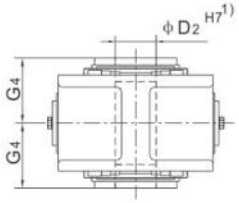	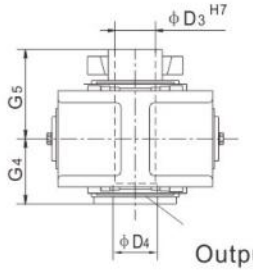	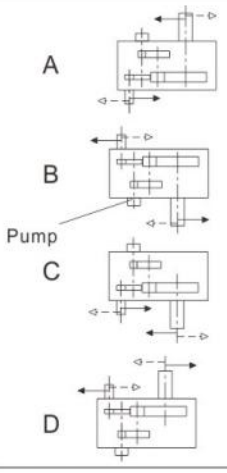
		A、D designs on request	

1)m6≤ ϕ100;n6> ϕ100
Keyway、Hubkeyway、Parallel key,see pages98–99.
2)Space for pump,pipes and cover;for exact dimensions,
Please refer to JIE.

Helical gear units
Three Stage Vertical
Type JRHH3.V Sizes 13-18





Size	Dimension (mm)																		
	Input																		
	i_N=22.4-45		i_N=25-50		i_N=28-56		i_N=50-63		i_N=56-71		i_N=63-80		i_N=71-90		i_N=80-100		i_N=90-112		G_1
	d_1	l_1	d_1	l_1	d_1	l_1	d_1	l_1	d_1	l_1	d_1	l_1	d_1	l_1	d_1	l_1	d_1	l_1	
13	85	160					60	135					50	110					310
14					85	160					60	135					50	110	310
15	100	200					75	140					60	140					350
16			100	200					75	140					60	140			350
17	100	200					75	140					60	140					380
18			100	200					75	140					60	140			380

Size	Dimension (mm)														
	Gear Units														
	a	b	c	E	f_2	f_3	h	h_2	m_1	m_2	n_1	n_2	p_1	p_2	s
13	1395	900	61±2	820	35	170	272.5	300	1300	680	50	360	50	500	48
14	1535	900	61±2	890	35	170	272.5	300	1440	680	50	430	50	500	48
15	1680	980	72±2	987	42	170	310	340	1565	750	60	430	50	570	55
16	1770	980	72±2	1033	42	170	310	340	1655	750	60	475	50	570	55
17	1770	1110	81±2	1035	42	210	340	374	1640	850	70	465	70	630	55
18	1890	1110	81±2	1095	42	210	340	374	1760	850	70	525	70	630	55

Size	Dimension (mm)									Oil (L)	Weight (kg)
	Output										
	JRHH3SV			JRHH3HV		JRHH3DV					
	d_2	G_2	l_2	D_2	G_4	D_3	D_4	G_4	G_5		
13	200	335	350	190	335	190	195	335	480	160	2155
14	210	335	350	210	335	210	215	335	480	180	2490
15	230	380	410	230	380	230	235	380	550	255	3260
16	240	380	410	240	380	240	245	380	550	260	3625
17	250	415	410	250	415	250	260	415	600	325	4250
18	270	415	470	275	415	280	265	415	600	335	4740

Helical gear units
Four Stage Vertical
Type JRHH4.V Sizes 7-12

JRHH4SV JRHH4HV JRHH4DV

Dip Lubrication

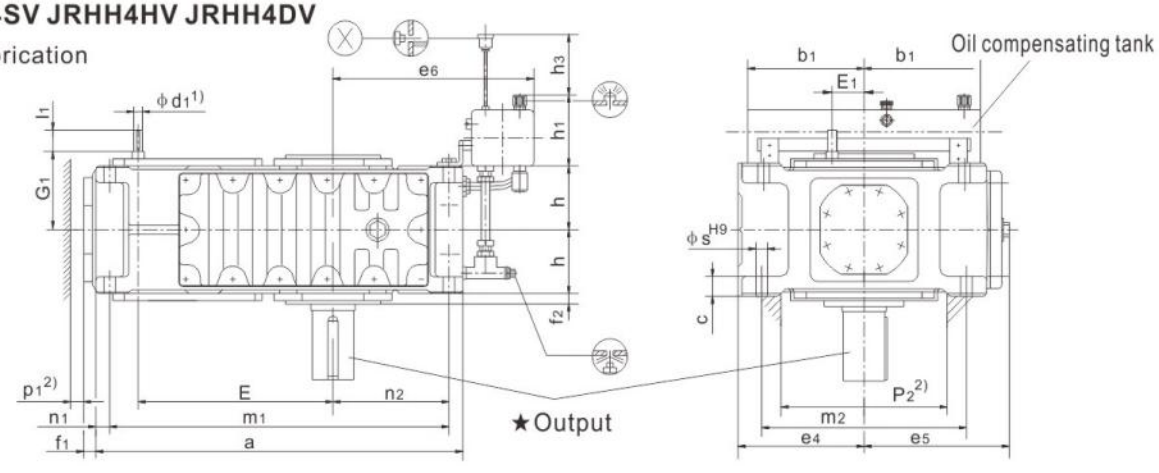

JRHH4SV JRHH4HV JRHH4DV

Forced Lubrication

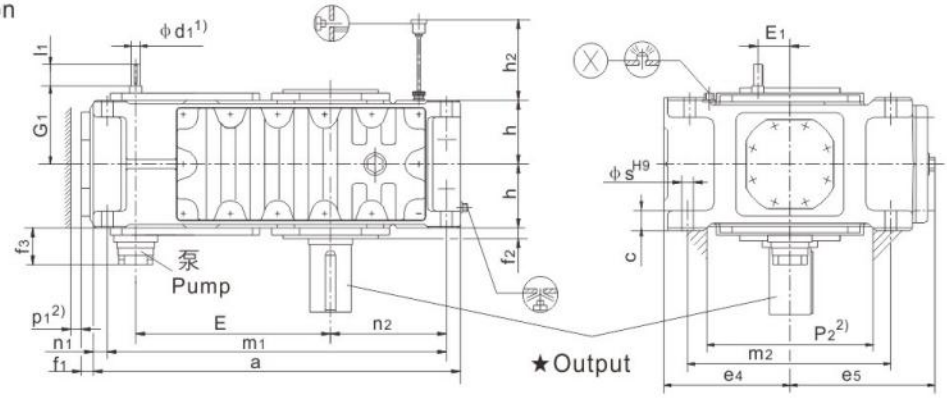

★Output			Design
JRHH4SV Solid shaft	**JRHH4HV** Hollow shaft	**JRHH4DV** Hollow shaft for shrink disk	
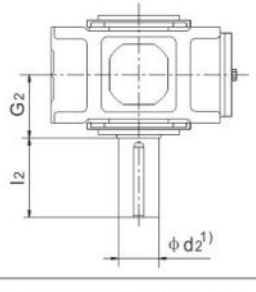	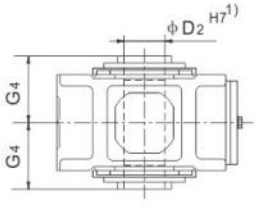	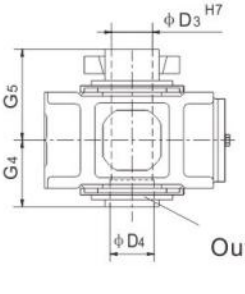 A、D designs on request	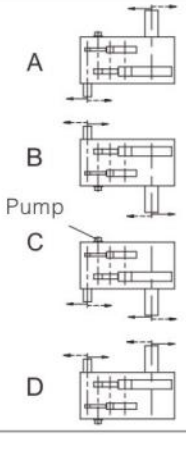 A B Pump C D

1)m6≤ ϕ100;n6> ϕ100
Keyway、Hubkeyway、Parallel key,see pages 96–97.
2)Space for pump,pipes and cover;for exact dimensions,
Please refer to JIE.

Helical gear units
Four Stage Vertical
Type JRHH4.V Sizes 7-12





Size	Dimension (mm)								
	Input								
	i_N=100-180		i_N=125-224		i_N=200-355		i_N=250-450		G_1
	d_1	l_1	d_1	l_1	d_1	l_1	d_1	l_1	
7	30	50			24	40			180
8			30	50			24	40	180
9	35	60			28	50			215
10			35	60			28	50	215
11	45	100			32	80			250
12			45	100			32	80	250

Size	Dimension (mm)										
	Gear Units										
	a	b_1	c	e_4	e_5	e_6	E	E_1	f_1	f_2	f_3
7	845	240	36±1	280	292	425	495	80	37	30	160
8	950	240	36±1	280	312	485	540	80	37	32	160
9	1000	330	45±1.5	320	342	560	580	90	43	32	170
10	1100	330	45±1.5	320	342	610	630	90	43	32	170
11	1200	330	54±1.5	380	402	595	705	110	47	35	170
12	1355	330	54±1.5	380	410	680	775	110	47	35	170

Size	Dimension (mm)										
	Gear Units										
	h	h_1	h_2	h_3	m_1	m_2	n_1	n_2	p_1	p_2	s
7	150	205	165	250	775	430	35	215	35	330	28
8	150	205	165	250	880	430	35	275	35	330	28
9	185	275	205	330	920	490	40	260	40	370	36
10	185	275	205	330	1020	490	40	310	40	370	36
11	215	275	240	340	1100	600	50	295	50	440	40
12	215	275	240	340	1255	600	50	380	50	440	40

Size	Dimension (mm)									Oil (L)		Weight (kg)
	Output									Shaft seal	Labyinth seal	
	JRHH4SV			JRHH4HV		JRHH4DV						
	d_2	G_2	l_2	D_2	G_4	D_3	D_4	G_4	G_5			
7	120	195	210	115	195	120	120	195	280	60	44	550
8	130	195	250	125	195	130	130	195	285	65	48	645
9	140	235	250	135	235	140	145	235	330	105	78	875
10	160	235	300	150	235	150	155	235	350	110	81	1010
11	170	270	300	165	270	165	170	270	400	175	113	1460
12	180	270	300	180	270	180	185	270	405	200	129	1725

Helical gear units
Four Stage Vertical
Type JRHH4.V Sizes 13-18

JRHH4SV JRHH4HV JRHH4DV

Forced Lubrication

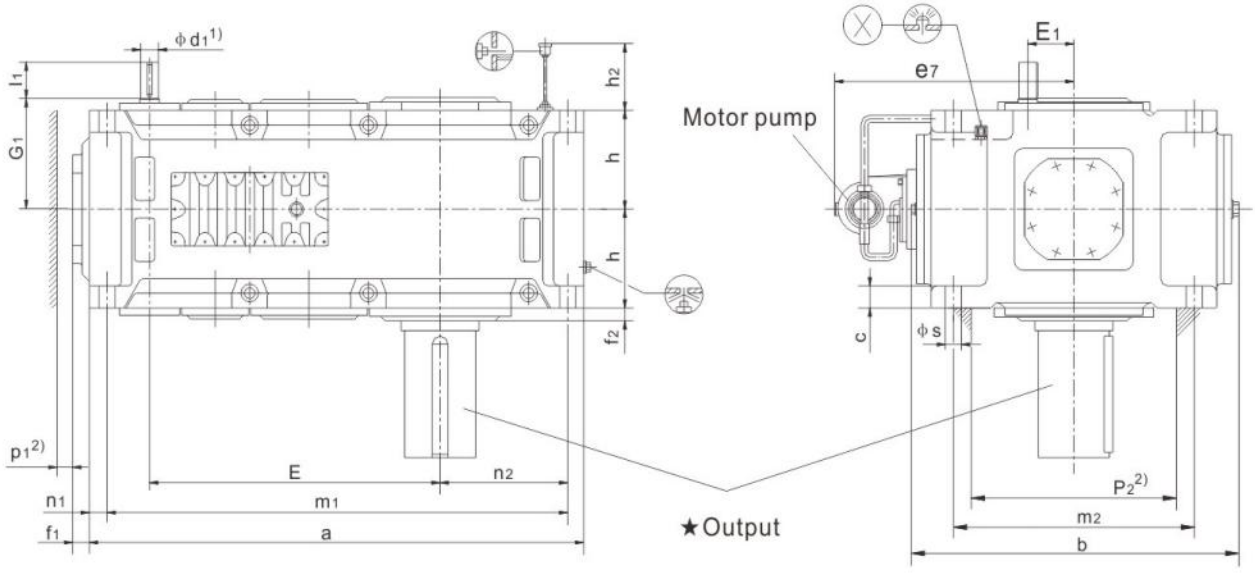

★Output			Design
JRHH4SV Solid shaft	**JRHH4HV** Hollow shaft	**JRHH4DV** Hollow shaft for shrink disk	
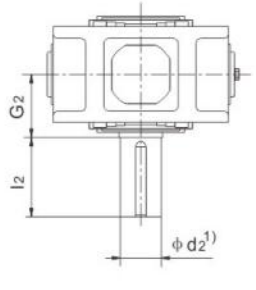	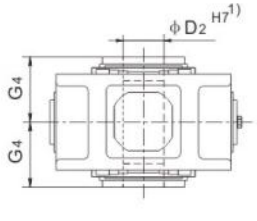	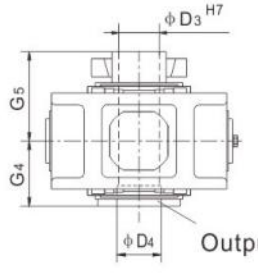	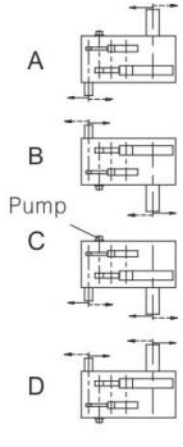
		A、D designs on request	

1)m6≤ ϕ100;n6> ϕ100
Keyway、Hubkeyway、Parallel key,see pages 98–99.
2)Space for pump,pipes and cover;for exact dimensions,
Please refer to JIE.

Helical gear units
Four Stage Vertical
Type JRHH4.V Sizes 13-18





Size	Dimension (mm)												
	Input												
	i_N=100-180		i_N=112-200		i_N=125-224		i_N=200-355		i_N=224-400		i_N=250-450		
	d_1	l_1	d_1	l_1	d_1	l_1	d_1	l_1	d_1	l_1	d_1	l_1	G_1
13	50	100					38	80					305
14					50	100					38	80	305
15	60	135					50	110					345
16			60	135					50	110			345
17	60	105					50	80					380
18			60	105					50	80			380

Size	Dimension (mm)																
	Gear Units																
	a	b	c	e_7	E	E_1	f_1	f_2	h	h_2	m_1	m_2	n_1	n_2	p_1	p_2	s
13	1395	900	61±2	695	820	130	47	35	272.5	300	1300	680	50	360	50	500	48
14	1535	900	61±2	695	890	130	47	35	272.5	300	1440	680	50	430	50	500	48
15	1680	980	72±2	735	987	160	56	42	310	340	1565	750	60	430	50	570	55
16	1770	980	72±2	735	1033	160	56	42	310	340	1655	750	60	475	50	570	55
17	1770	1110	81±2	795	1035	160	53	42	340	374	1640	850	70	465	70	630	55
18	1890	1110	81±2	795	1095	160	53	42	340	374	1760	850	70	525	70	630	55

Size	Dimension (mm)									Oil (L)	Weight (kg)
	Output										
	JRHH4SV			JRHH4HV		JRHH4DV					
	d_2	G_2	l_2	D_2	G_4	D_3	D_4	G_4	G_5		
13	200	335	350	190	335	190	195	335	480	140	2270
14	210	335	350	210	335	210	215	335	480	160	2600
15	230	380	410	230	380	235	235	380	550	220	3440
16	240	380	410	240	380	240	245	380	550	230	3740
17	250	415	410	250	415	250	260	415	600	280	4445
18	270	415	470	275	415	280	285	415	600	300	4915

Bevel-helical gear units
Two Stage Vertical
Type JRHB2.V Sizes 4-12

JRHB2SV JRHB2HV JRHB2DV

Dip Lubrication

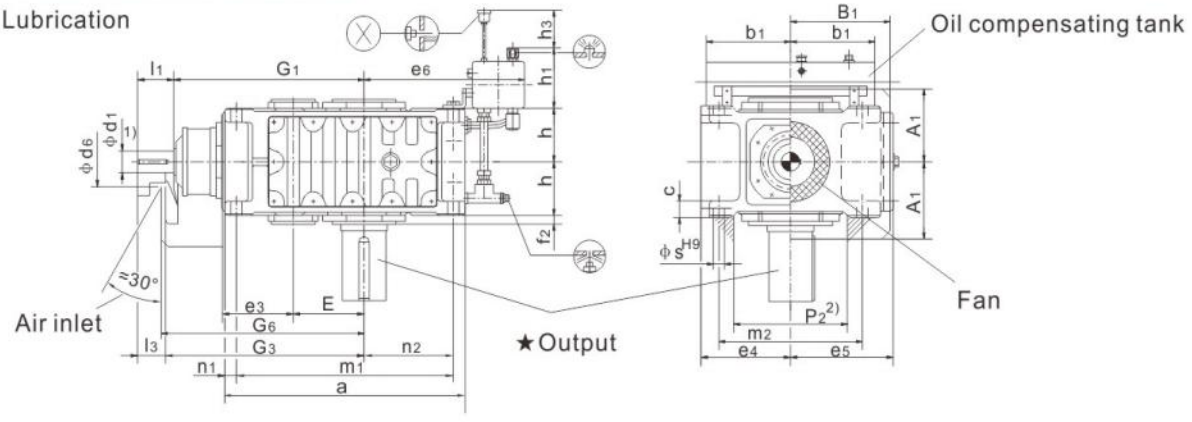

JRHB2SV JRHB2HV JRHB2DV

Forced Lubrication

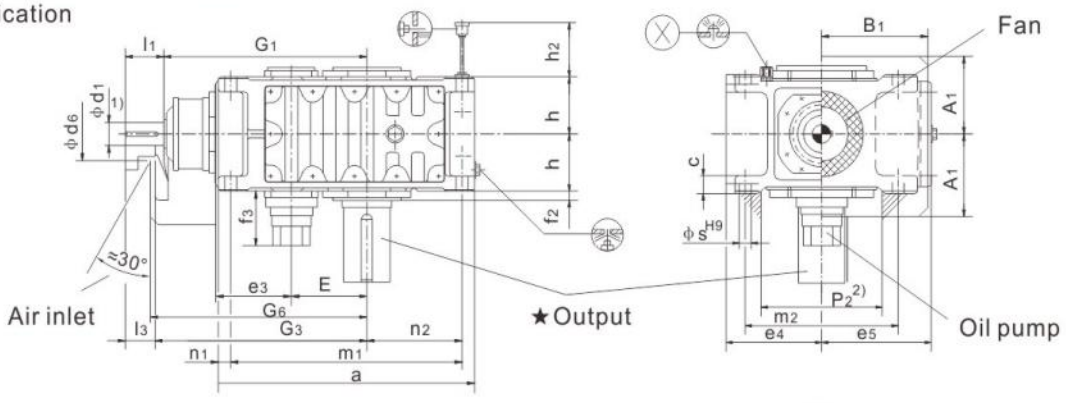

★Output			Design
JRHB2SV Solid shaft	**JRHB2HV** Hollow shaft	**JRHB2DV** Hollow shaft for shrink disk	
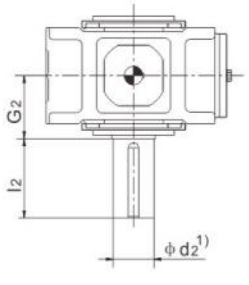	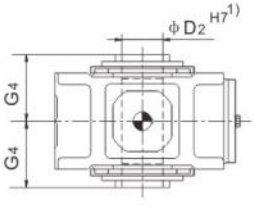	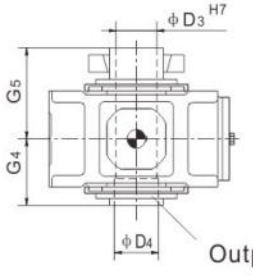 Output A、D designs on request	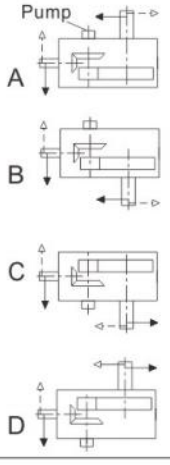 Pump A B C D

1)m6≤ ϕ100;n6> ϕ100
Keyway、Hubkeyway、Parallel key,see pages 96–97.
2)Space for pump,pipes and cover;for exact dimensions,
Please refer to JIE.

Bevel-helical gear units
Two Stage Vertical
Type JRHB2.V Sizes 4-12





Size	Dimension (mm)							
	Input							
	i_N=5-11.2			i_N=6.3-14			G_1	G_3
	d_1	l_1	l_3	d_1	l_1	l_3		
4	45	110	80				465	485
5	55	110	80				535	565
6				55	110	80	570	600
7	70	135	105				640	670
8				70	135	105	685	715
9	80	165	130				755	790
10				80	165	130	805	840
11	90	165	130				925	960
12				90	165	130	995	1030

Size	Dimension (mm)											
	Gear Units											
	a	A_1	b_1	B_1	c	d_6	e_3	e_4	e_5	e_6	E	f_2
4	505	188	150	200	30±1	150	100	200	215	320	160	26
5	565	215	240	235	30±1	160	185	230	252	385	185	30
6	645	215	240	235	30±1	160	185	230	252	425	220	30
7	690	250	240	285	36±1	210	225	280	302	425	225	32
8	795	250	240	285	36±1	210	225	280	302	485	270	32
9	820	270	330	325	48±1.5	195	265	320	342	560	265	45
10	920	270	330	325	48±1.5	195	265	320	342	610	315	45
11	975	328	330	385	54±1.5	210	320	380	410	595	320	47
12	1130	328	330	385	54±1.5	210	320	380	410	680	390	47

Size	Dimension (mm)											
	Gear Units											
	f_3	G_6	h	h_1	h_2	h_3	m_1	m_2	n_1	n_2	p_2	s
4	-	495	135	165	-	180	445	300	30	160	200	24
5	190	575	160	205	245	240	505	360	30	175	270	24
6	190	610	160	205	245	240	585	360	30	220	270	24
7	200	685	190	205	220	250	620	430	35	215	330	28
8	200	730	190	205	220	250	725	430	35	275	330	28
9	200	805	220	275	250	330	740	490	40	260	370	36
10	200	855	220	275	250	330	840	490	40	310	370	36
11	200	980	265	275	300	340	875	600	50	295	440	40
12	200	1050	265	275	300	340	1030	600	50	380	440	40

Size	Dimension (mm)									Oil (L)		Weight (kg)
	Output									Dip lubrication	Forced lubrication	
	JRHB2SV			JRHB2HV		JRHB2DV						
	d_2	G_2	l_2	D_2	G_4	D_3	D_4	G_4	G_5			
4	80	170	170	80	170	85	85	170	235	23.5	-	235
5	100	200	210	95	200	100	100	200	275	38	19	360
6	110	200	210	105	200	110	110	200	275	46	23	410
7	120	235	210	115	235	120	120	235	320	74	37	615
8	130	235	250	125	235	130	130	235	325	81	40	700
9	140	270	250	135	270	140	145	270	365	115	57	1000
10	160	270	300	150	270	150	155	270	385	120	60	1155
11	170	320	300	165	320	165	170	320	450	190	95	1640
12	180	320	300	180	320	180	185	320	455	225	114	1910

Bevel-helical gear units
Two Stage Vertical
Type JRHB2.V Sizes 13-18

JRHB2SV JRHB2HV JRHB2DV

Forced Lubrication

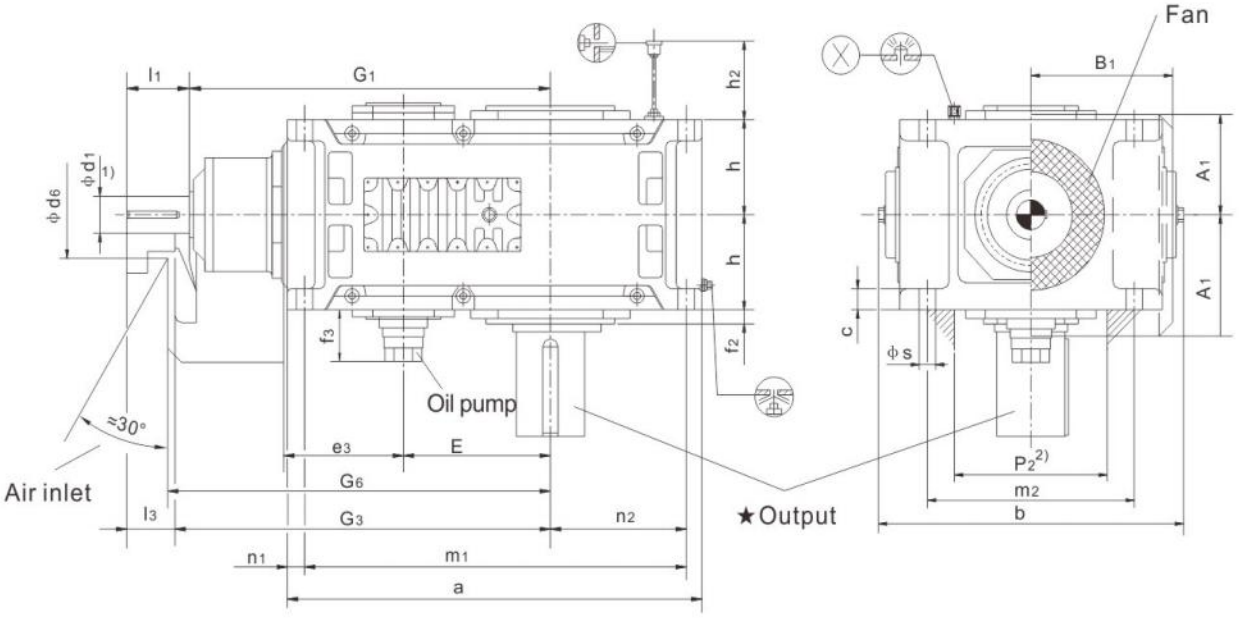

★Output			Design
JRHB2SV Solid shaft 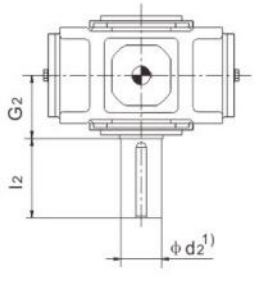	**JRHB2HV** Hollow shaft 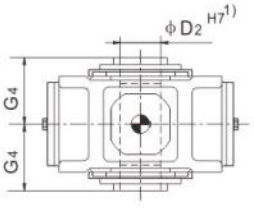	**JRHB2DV** Hollow shaft for shrink disk 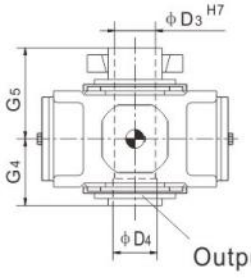 A、D designs on request	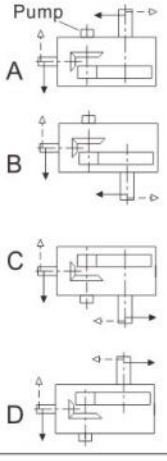

1)m6≤ ϕ100;n6> ϕ100
Keyway、Hubkeyway、Parallel key,see pages 98–99.
2)Space for pump,pipes and cover;for exact dimensions,
Please refer to JIE.

Bevel-helical gear units
Two Stage Vertical
Type JRHB2.V Sizes 13-18



Size	Dimension (mm)																
	Input																
	i_N=5-11.2			i_N=5.6-11.2			i_N=5.6-12.5			i_N=6.3-14			i_N=7.1-12.5			G_1	G_3
	d_1	l_1	l_3	d_1	l_1	l_3	d_1	l_1	l_3	d_1	l_1	l_3	d_1	l_1	l_3		
13	110	205	165													1070	1110
14										110	205	165				1140	1180
15	130	245	200													1277	1322
16							130	245	200							1323	1368
17				150	245	200										1435	1480
18													150	245	200	1495	1540

Size	Dimension (mm)									
	Gear Units									
	a	A_1	b	B_1	c	d_6	e_3	E	f_2	f_3
13	1130	375	900	450	61±2	245	380	370	38	200
14	1270	375	900	450	61±2	245	380	440	45	200
15	1350	435	980	495	72±2	280	450	442	75	200
16	1440	435	980	495	72±2	280	450	488	75	200
17	1490	505	1110	555	81±2	380	510	490	98	200
18	1610	505	1110	555	81±2	380	510	550	98	200

Size	Dimension (mm)								
	Gear Units								
	G_6	h	h_2	m_1	m_2	n_1	n_2	p_2	s
13	1130	325	350	1035	680	50	360	500	48
14	1200	325	350	1175	680	50	430	500	48
15	1340	380	430	1235	750	60	430	570	55
16	1385	380	430	1325	750	60	475	570	55
17	1500	437.5	480	1360	840	70	465	630	65
18	1560	437.5	480	1480	840	70	525	630	65

Size	Dimension (mm)									Oil (L)	Weight (kg)
	Output										
	JRHB2SV			JRHB2HV		JRHB2DV					
	d_2	G_2	l_2	D_2	G_4	D_3	D_4	G_4	G_5		
13	200	390	350	-	-	-	-	-	-	125	2350
14	210	390	350	210	390	210	215	390	535	140	2725
15	230	460	410	-	-	-	-	-	-	190	3795
16	240	460	410	240	450	240	245	450	620	200	4160
17	250	540	410	-	-	-	-	-	-	270	5320
18	270	540	470	275	510	280	285	510	700	295	5860

Bevel-helical gear units
Three Stage Vertical
Type JRHB3.V Sizes 4-12

JRHB3SV JRHB3HV JRHB3DV
Dip Lubrication

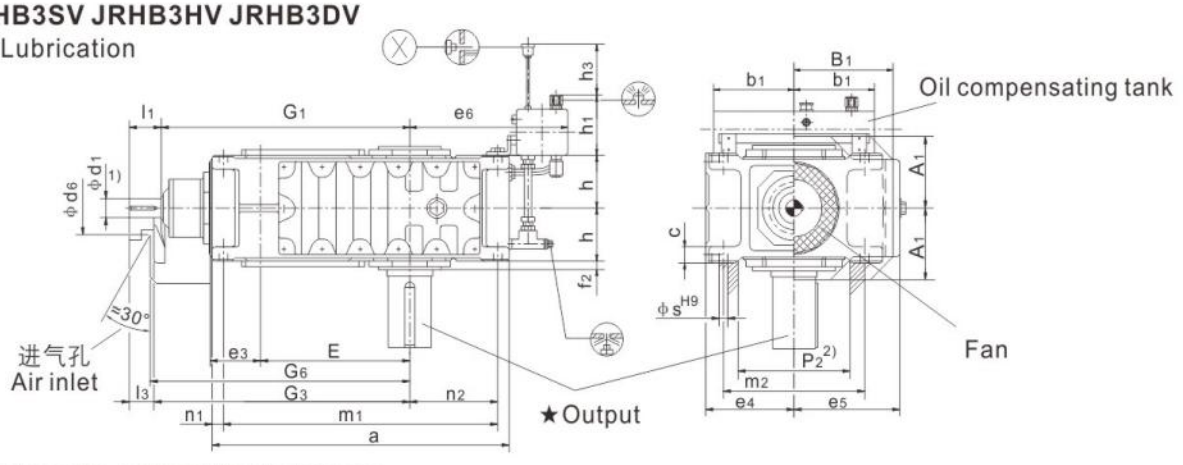

JRHB3SV JRHB3HV JRHB3DV
Forced Lubrication

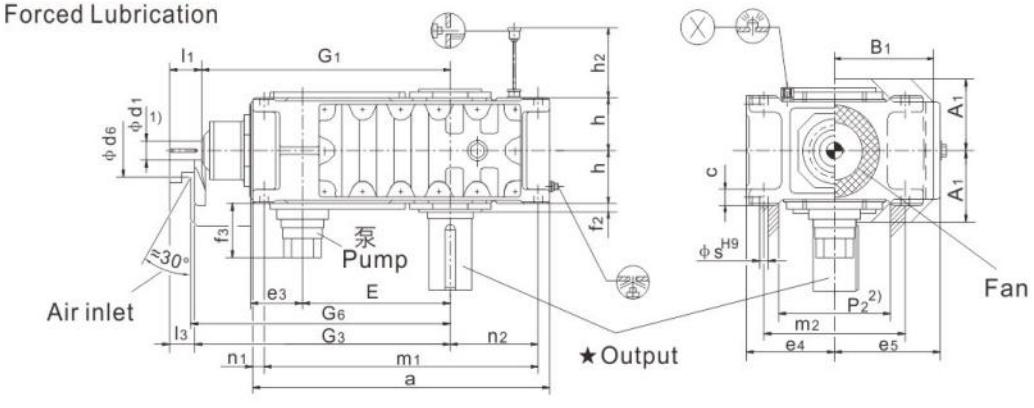

★Output			Design
JRHB3SV Solid shaft	**JRHB3HV** Hollow shaft	**JRHB3DV** Hollow shaft for shrink disk	
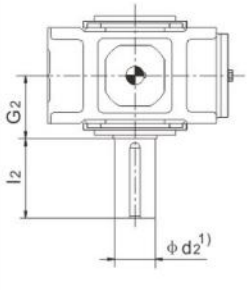	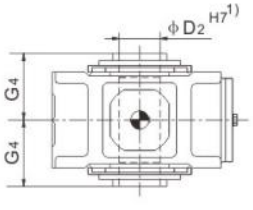	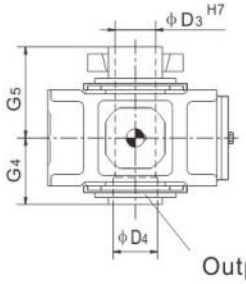	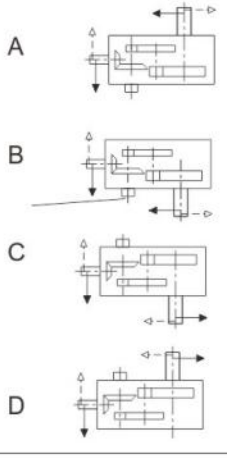
		A、D designs on request	

1)m6≤ ϕ100;n6> ϕ100
Keyway、Hubkeyway、Parallel key,see pages 98–99.
2)Space for pump,pipes and cover;for exact dimensions,
Please refer to JIE.

Bevel-helical gear units
Three Stage Vertical
Type JRHB3.V Sizes 4-12





Size	Dimension (mm)													
	Input												G_1	G_3
	i_N=12.5-45			i_N=16-56			i_N=50-71			i_N=63-90				
	d_1	l_1	l_3	d_1	l_1	l_3	d_1	l_1	l_3	d_1	l_1	l_3		
4	30	70	80				25	60	40				500	500
5	35	80	60				28	60	40				575	595
6				35	80	60				28	60	40	610	630
7	45	100	80				35	80	60				690	710
8				45	100	80				35	80	60	735	755
9	55	110	80				40	100	70				800	830
10				55	110	80				40	100	70	850	880
11	70	135	105				50	110	80				960	990
12				70	135	105				50	110	80	1030	1060

Size	Dimension (mm)											
	Gear Units											
	a	A_1	b_1	B_1	c	d_6	e_3	e_4	e_5	e_6	E	f_2
4	565	143	150	200	30±1	110	110	200	215	320	270	22
5	640	168	240	235	30±1	130	130	230	252	385	315	28
6	720	168	240	235	30±1	130	130	230	252	425	350	28
7	785	193	240	275	36±1	165	160	280	292	425	385	30
8	890	193	240	275	36±1	165	160	280	302	485	430	32
9	925	231	330	325	45±1.5	175	185	320	342	560	450	32
10	1025	231	330	325	45±1.5	175	185	320	342	610	500	32
11	1105	263	330	385	54±1.5	190	225	380	402	595	545	35
12	1260	263	330	385	54±1.5	190	225	380	410	680	615	35

Size	Dimension (mm)											
	Gear Units											
	f_3	G_6	h	h_1	h_2	h_3	m_1	m_2	n_1	n_2	p_2	s
4	-	530	107.5	165	-	180	505	300	30	160	220	24
5	190	605	127.5	205	180	240	580	360	30	175	270	24
6	190	640	127.5	205	180	240	660	360	30	220	270	24
7	190	720	150	205	165	250	715	430	35	215	330	28
8	190	765	150	205	165	250	820	430	35	275	330	28
9	180	845	185	275	205	330	845	490	40	260	370	36
10	180	895	185	275	205	330	945	490	40	310	370	36
11	180	1010	215	275	240	340	1005	600	50	295	440	40
12	180	1080	215	275	240	340	1160	600	50	380	440	40

Size	Dimension (mm)									Oil (L)		Weight (kg)
	Output									Dip lubrication	Forced lubrication	
	JRHB3SV			JRHB3HV		JRHB3DV						
	d_2	G_2	l_2	D_2	G_4	D_3	D_4	G_4	G_5			
4	80	140	170	80	140	85	85	140	205	20	-	210
5	100	165	210	95	165	100	100	165	240	34	17	325
6	110	165	210	105	165	110	110	165	240	36	18	380
7	120	195	210	115	195	120	120	195	280	60	30	550
8	130	195	250	125	195	130	130	195	285	68	34	635
9	140	235	250	135	235	140	145	235	330	96	48	890
10	160	235	300	150	235	150	155	235	350	105	52	1020
11	170	270	300	165	270	165	170	270	400	155	77	1455
12	180	270	300	180	270	180	185	270	405	175	87	1730

Bevel-helical gear Units
Three Stage Vertical
Type JRHB3.V Sizes 13-18

JRHB3SV JRHB3HV JRHB3DV

Forced Lubrication

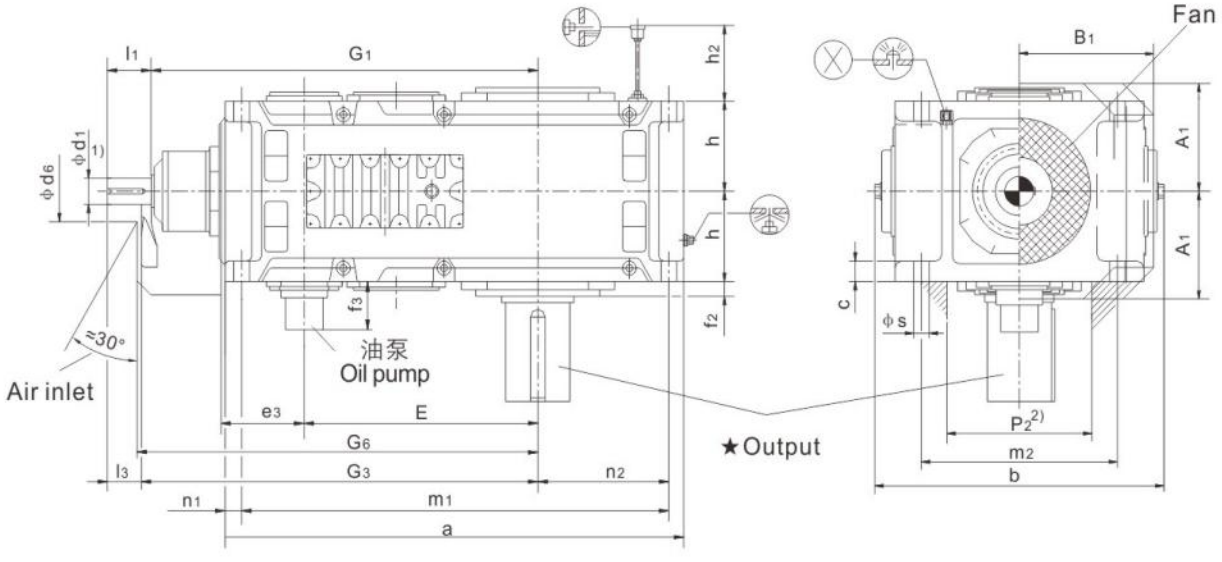

★Output			Design
JRHB3SV Solid shaft	**JRHB3HV** Hollow shaft	**JRHB3DV** Hollow shaft for shrink disk	
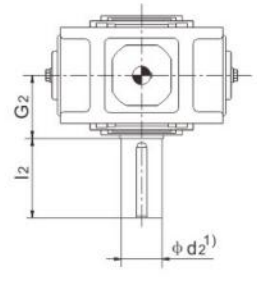	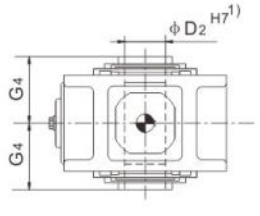	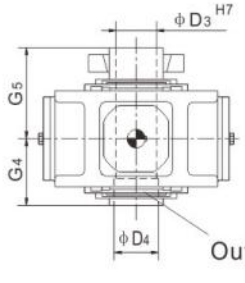	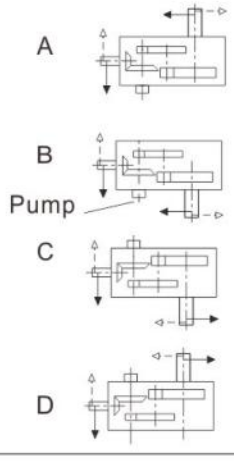
		A、D designs on request	

1)m6≤ ϕ 100;n6> ϕ 100
Keyway、Hubkeyway、Parallel key,see pages 98–99.
2)Space for pump,pipes and cover;for exact dimensions,
Please refer to JIE.

Bevel-helical gear units
Three Stage Vertical
Type JRHB3.V Sizes 13-18





Size	Dimension (mm)																			
	Input																		G_1	G_3
	i_N=12.5-45			i_N=14-50			i_N=16-56			i_N=50-71			i_N=56-80			i_N=63-90				
	d_1	l_1	l_3	d_1	l_1	l_3	d_1	l_1	l_3	d_1	l_1	l_3	d_1	l_1	l_3	d_1	l_1	l_3		
13	80	165	130							60	140	105							1125	1160
14							80	165	130							60	140	105	1195	1230
15	90	165	130							70	140	105							1367	1402
16				90	165	130							70	140	105				1413	1448
17	110	205	135							80	170	130							1560	1600
18				110	205	165							80	170	130				1620	1660

Size	Dimension (mm)									
	Gear Units									
	a	A_1	b	B_1	c	d_6	e_3	E	f_2	f_3
13	1290	325	900	475	61±2	210	265	635	35	170
14	1430	325	900	475	61±2	210	265	705	35	170
15	1550	365	980	520	72±2	210	320	762	42	170
16	1640	365	980	520	72±2	210	320	808	42	170
17	1740	395	1110	570	81±2	230	370	860	42	170
18	1860	395	1110	570	81±2	230	370	920	42	170

Size	Dimension (mm)								
	Gear Units								
	G_6	h	h_2	m_1	m_2	n_1	n_2	p_2	s
13	1180	272.5	300	1195	680	50	360	500	48
14	1250	272.5	300	1335	680	50	430	500	48
15	1420	310	340	1435	750	60	430	570	55
16	1470	310	340	1525	750	60	475	570	55
17	1620	340	380	1610	850	70	465	630	55
18	1680	340	380	1730	850	70	525	630	55

Size	Dimension (mm)									Oil (L)	Weight (kg)
	Output										
	JRHB3SV			JRHB3HV		JRHB3DV					
	d_2	G_2	l_2	D_2	G_4	D_3	D_4	G_4	G_5		
13	200	335	350	190	335	190	195	335	480	115	2260
14	210	335	350	210	335	210	215	335	480	130	2615
15	230	380	410	230	380	230	235	380	550	180	3540
16	240	380	410	240	380	240	245	380	550	190	3765
17	250	415	410	250	415	250	260	415	600	260	4760
18	270	415	470	275	415	280	285	415	600	275	5240

Bevel-helical gear units
Four Stage Vertical
Type JRHB4.V Sizes 5-12

JRHB4SV JRHB4HV JRHB4DV

Dip Lubrication

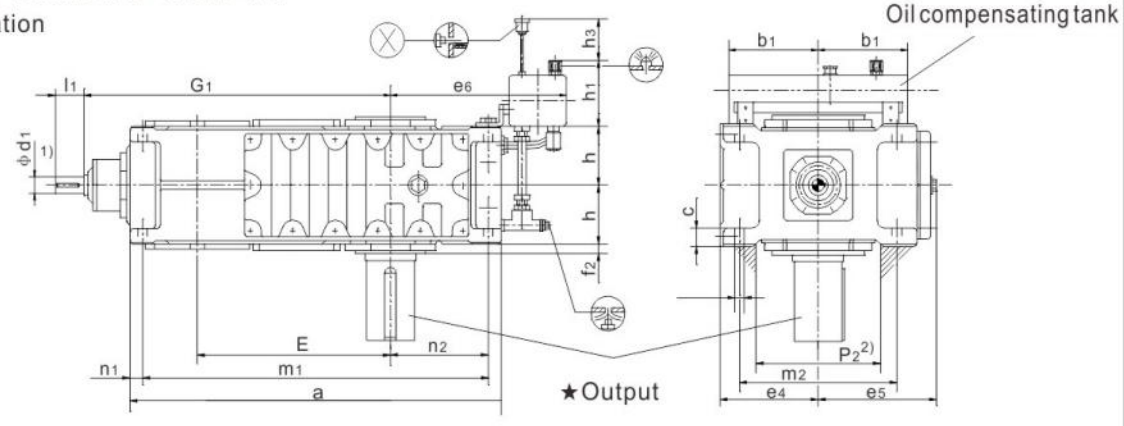

JRHB4SV JRHB4HV JRHB4DV

Forced Lubrication

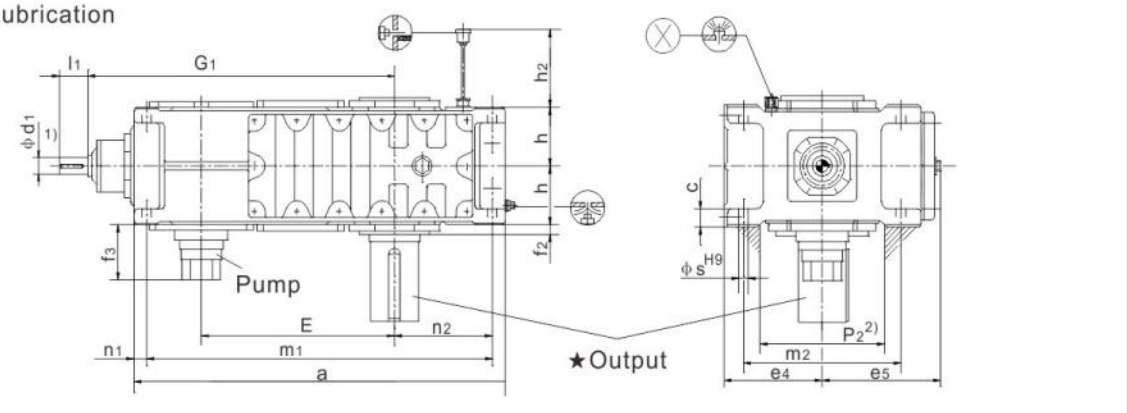

★Output			Design
JRHB4SV Solid shaft	**JRHB4HV** Hollow shaft	**JRHB4DV** Hollow shaft for shrink disk	
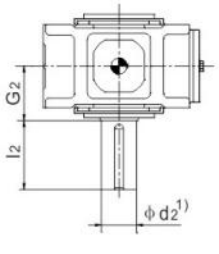	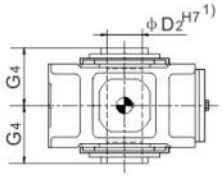	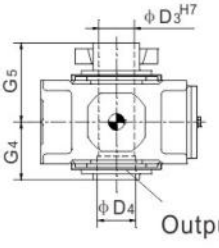	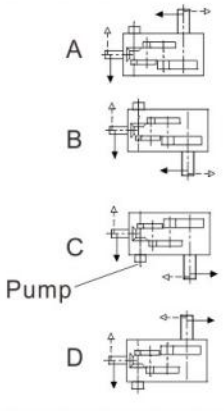
		A、D designs on request	

1)m6≤ ϕ100;n6> ϕ100
Keyway、Hubkeyway、Parallel key,see pages 98–99.
2)Space for pump,pipes and cover;for exact dimensions,
Please refer to JIE.

Bevel-helical gear units
Four Stage Vertical
Type JRHB4.V Sizes 5-12





Size	Dimension (mm)								
	Input								
	i_N=80-180		i_N=100-224		i_N=200-315		i_N=250-400		G_1
	d_1	l_1	d_1	l_1	d_1	l_1	d_1	l_1	
5	28	55			20	50			615
6			28	55			20	50	650
7	30	70			25	60			725
8			30	70			25	60	770
9	35	80			28	60			840
10			35	80			28	60	890
11	45	100			35	80			1010
12			45	100			35	80	1080

Size	Dimension (mm)								
	Gear Units								
	a	b_1	c	e_4	e_5	e_6	E	f_2	f_3
5	690	240	30±1	230	252	385	405	28	200
6	770	240	30±1	230	252	425	440	28	200
7	845	240	36±1	280	292	425	495	30	120
8	950	240	36±1	280	302	485	540	32	120
9	1000	330	45±1.5	320	342	560	580	32	120
10	1100	330	45±1.5	320	342	610	630	32	120
11	1200	330	54±1.5	380	402	595	705	35	130
12	1355	330	54±1.5	380	410	680	775	35	130

Size	Dimension (mm)									
	Gear Units									
	h	h_1	h_2	h_3	m_1	m_2	n_1	n_2	p_2	s
5	127.5	205	190	240	630	360	30	175	270	24
6	127.5	205	190	240	710	360	30	220	270	24
7	150	205	165	250	775	430	35	215	330	28
8	150	205	165	250	880	430	35	275	330	28
9	185	275	205	330	920	490	40	260	370	36
10	185	275	205	330	1020	490	40	310	370	36
11	215	275	240	340	1100	600	50	295	440	40
12	215	275	240	340	1255	600	50	380	440	40

Size	Dimension (mm)									Oil (L)		Weight (kg)
	Output									Dip lubrication	Forced lubrication	
	JRHB4SV			JRHB4HV		JRHB4DV						
	d_2	G_2	l_2	D_2	G_4	D_3	D_4	G_4	G_5			
5	100	165	210	95	165	100	100	165	240	36	18	335
6	110	165	210	105	165	110	110	165	240	40	20	385
7	120	195	210	115	195	120	120	195	280	65	32	555
8	130	195	250	125	195	130	130	195	285	73	36	655
9	140	235	250	135	235	140	145	235	330	105	52	890
10	160	235	300	150	235	150	155	235	350	110	55	1025
11	170	270	300	165	270	165	170	270	400	175	87	1485
12	180	270	300	180	270	180	185	270	405	200	100	1750

Bevel-helical gear units
Four Stage Vertical
Type JRHB4.V Sizes 13-18

JRHB4SV JRHB4HV JRHB4DV

Dip Lubrication

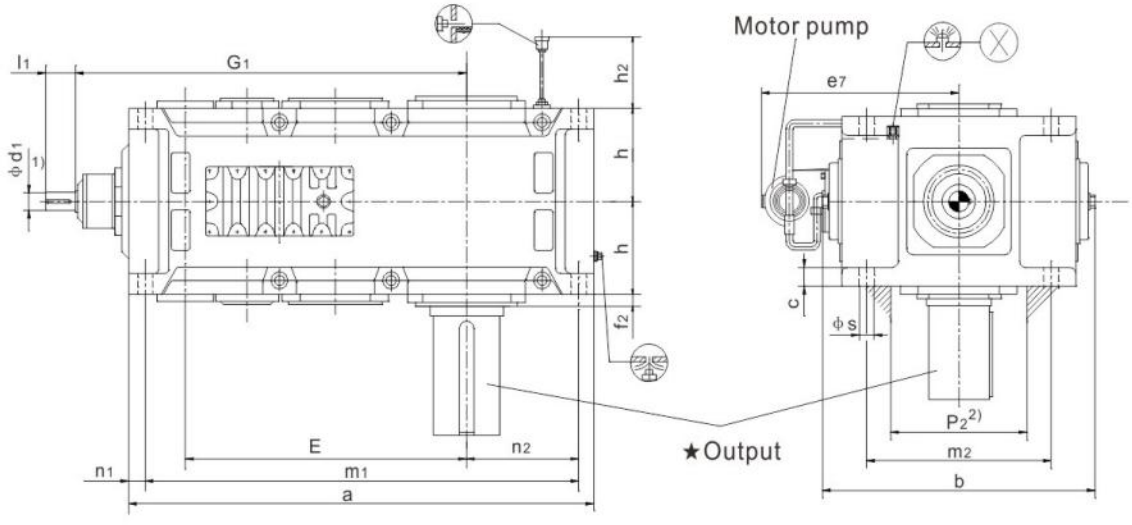

★Output			Design
JRHB4SV Solid shaft	**JRHB4HV** Hollow shaft	**JRHB4DV** Hollow shaft for shrink disk	
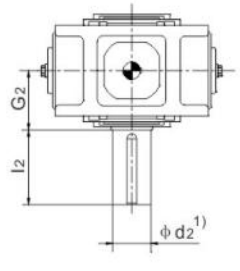	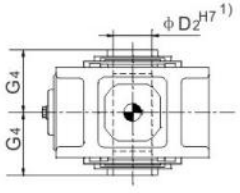	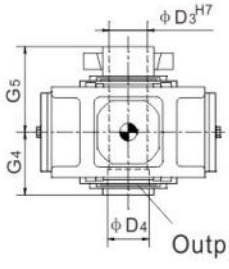	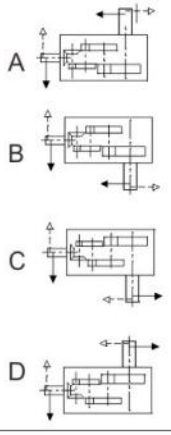
		A、D designs on request	

1)m6≤ ϕ100;n6> ϕ100
Keyway、Hubkeyway、Parallel key,see pages 98–99.
2)Space for pump,pipes and cover;for exact dimensions,
Please refer to JIE.

Bevel-helical gear units
Four Stage Vertical
Type JRHB4.V Sizes 13-18



Size	Dimension (mm)												
	Input												
	i_N=80-180		i_N=90-200		i_N=100-224		i_N=200-315		i_N=224-355		i_N=250-450		G_1
	d_1	l_1	d_1	l_1	d_1	l_1	d_1	l_1	d_1	l_1	d_1	l_1	
13	55	110					40	100					1170
14					55	110					40	100	1240
15	70	135					50	110					1402
16			70	135					50	110			1448
17	70	135					50	110					1450
18			70	135					50	110			1510

Size	Dimension (mm)													
	Gear Units													
	a	b	c	e_7	E	f_2	h	h_2	m_1	m_2	n_1	n_2	p_2	s
13	1395	900	61±2	695	820	35	272.5	300	1300	680	50	360	500	48
14	1535	900	61±2	695	890	35	272.5	300	1440	680	50	430	500	48
15	1680	980	72±2	735	987	42	310	340	1565	750	60	430	570	55
16	1770	980	72±2	735	1033	42	310	340	1655	750	60	475	570	55
17	1770	1110	81±2	795	1035	42	340	374	1640	850	70	465	630	55
18	1890	1110	81±2	795	1095	42	340	374	1760	850	70	525	630	55

Size	Dimension (mm)									Oil (L)	Weight (kg)
	Output										
	JRHB4SV			JRHB4HV		JRHB4DV					
	d_2	G_2	l_2	D_2	G_4	D_3	D_4	G_4	G_5		
13	200	335	350	190	335	190	195	335	480	135	2280
14	210	335	350	210	335	210	215	335	480	150	2605
15	230	380	410	230	380	230	235	380	550	210	3435
16	240	380	410	240	380	240	245	380	550	220	3765
17	250	415	410	250	415	250	260	415	600	270	4460
18	270	415	470	275	415	280	285	415	600	285	4930

Industrial Gear Units
Centre Holles, Form DS On Shaft Ends
Acc.to DIN 332/2

Form DS
Tapped hole, with straight running face and counterbore

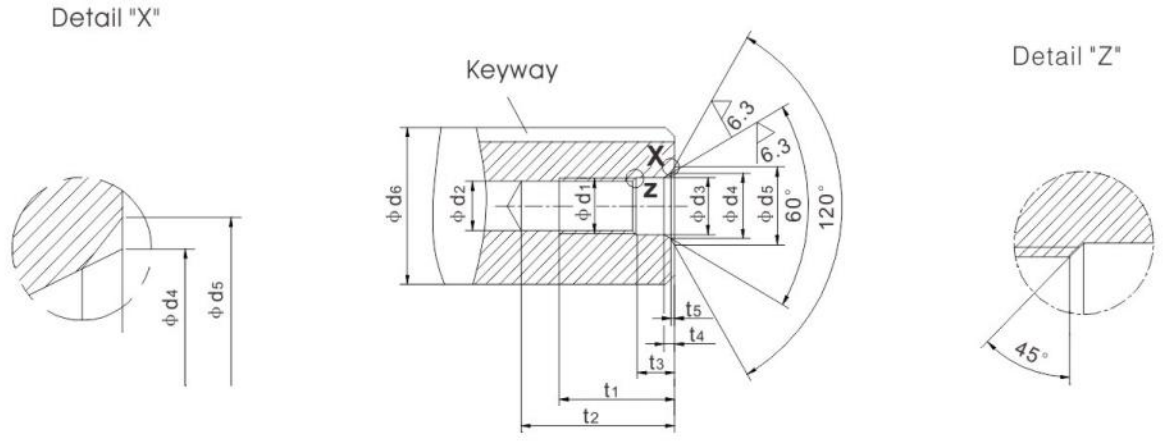

Recommended diameters d_6 [1] above	to	Form DS DS Centering	d_1	d_2 [2]	d_3	d_4	d_5	t_1 +2	t_2 min.	t_2 max.	t_3 +1	t_4 ≈	t_5 ≈
mm		mm											
16	21	DS 6	M6	5	6.4	9.6	10.5	16	20	22	5	2.8	0.4
21	24	DS 8	M8	6.8	8.4	12.2	13.2	19	25	28	6	3.3	0.4
24	30	DS 10	M10	8.5	10.5	14.9	16.3	22	30	34	7.5	3.8	0.6
30	38	DS 12	M12	10.2	13	18.1	19.8	28	37	42	9.5	4.4	0.7
38	50	DS 16	M16	14	17	23	25.3	36	45	50	12	5.2	1.0
50	85	DS 20	M20	17.5	21	28.4	31.3	42	53	59	15	6.4	1.3
85	130	DS 24	M24	21	25	34.2	38	50	63	68	18	8	1.6
130*	225*	DS 30	M 30*	26.5	31	44	48	60	77	83	17	11	1.9
225*	320*	DS 36	M36*	32	37	55	60	74	93	99	22	15	2.3
320*	500*	DS 42	M42*	37.5	43	65	71	84	105	111	26	19	2.7

1) Diameter of the finished work piece

2) Drill diameters for tapping–size holes acc.to DIN 336Pt.1

*) Dimensions not acc.to DIN332

Industrial Gear Units
Selection of ISO Fits
Parallel Keys and Keyways

Selection of ISO Fits				
Selection of ISO fits	Shaft d above mm	Shaft d to mm	Shaft tolerance	Bore tolerance
Shaft tolerance acc.to JIE standard		25	k6	H7
	25	100	m6	
	100		n6	

For heavy-duty Operating conditions, e.g.reversing under load, it is recommended that a tighter fit and for the hub keyway width the ISO P9 olerance is sefected.

In this case, the customer should give the relevant information.

Parallel keys

Drive type fastening without taper action

Paralllel key and keyway acc.to DIN 6885 / 1

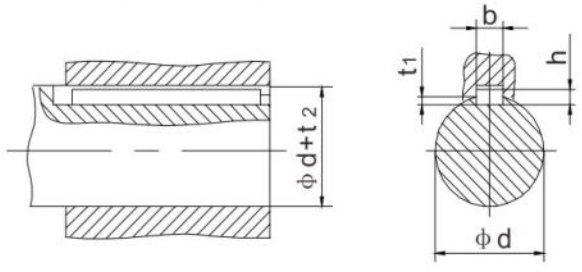

1) The tolerance zone for the hub keyway width b for parallel keys is ISO P9 for heavy–duty operating conditions.

Diameter d above mm	Diameter d to mm	Width b 1) mm	Height h mm	Deptin of keyway in shaft t_1 mm	Deptin of keyway in hub d + t2 DIN 6885/1 mm
22	30	8	7	4	d+3.3
30	38	10	8	5	d+3.3
38	44	12	8	5	d+3.3
44	50	14	9	5.5	d+3.8
50	58	16	10	6	d+4.3
58	65	18	11	7	d+4.4
65	75	20	12	7.5	d+4.9
75	85	22	14	9	d+5.4
85	95	25	14	9	d+5.4
95	110	28	16	10	d+6.4
110	130	32	18	11	d+7.4
130	150	36	20	12	d+8.4
150	170	40	22	13	d+9.4
170	200	45	25	15	d+10.4
200	230	50	28	17	d+11.4
230	260	56	32	20	d+12.4
260	290	63	32	20	d+12.4
290	330	70	36	22	d+14.4
330	380	80	40	25	d+15.4
380	440	90	45	28	d+17.4
440	500	100	50	31	d+19.4

Industrial Gear Units

Hollow Shafts for Parallel Key Connections

Types JRHH2.JRHH3,JRHH4,JRHB3,JRHB4

Sizes 4-18

Driven machine shaft for parallel key connertion keyway acc.to DIN 6885/1

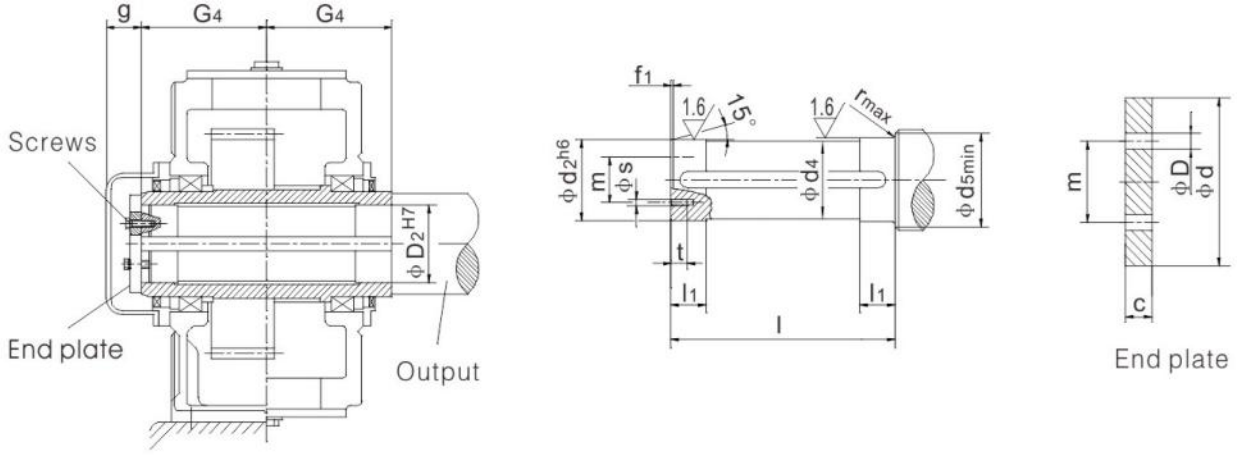

Types JRHH2H、JRHH3H、JRHH4H、JRHB3H、JRHB4H																		
Gear units	Driven machine shaft									End plate				Screw		Hollow shaft		
size	d_2	d_4	d_5	f_1	l	l_1	r	s	t	c	D	d	m	Size	Qty	D_2	G_4	g
4	80	79.5	88	4	278	35	1.2	M10	18	10	11	100	60	M10X25	2	80	140	35
5	95	94.5	105	5	328	40	1.6	M10	18	10	11	120	70	M10X25	2	95	165	40
6	105	104.5	116	5	328	45	1.6	M10	18	10	11	120	70	M10X25	2	105	165	40
7	115	114.5	126	5	388	50	1.6	M12	20	12	13.5	140	80	M12X30	2	115	195	40
8	125	124.5	136	6	388	55	2.5	M12	20	12	13.5	150	85	M12X30	2	125	195	40
9	135	134.5	147	6	467	60	2.5	M12	20	12	13.5	150	90	M12X30	2	135	235	45
10	150	149.5	162	6	467	65	2.5	M12	20	12	13.5	185	110	M12X30	2	150	235	45
11	165	164.5	177	7	537	70	2.5	M16	28	15	17.5	195	120	M16X40	2	165	270	45
12	180	179.5	192	7	537	75	2.5	M16	28	15	17.5	220	130	M16X40	2	180	270	45
13	190	189.5	206	7	667	80	3	M16	28	18	17.5	230	140	M16X40	2	190	335	45
14	210	209.5	226	8	667	85	3	M16	28	18	17.5	250	160	M16X40	2	210	335	45
15	230	229.5	248	8	756	100	3	M20	38	25	22	270	180	M20X55	4	230	380	60
16	240	239.5	258	8	756	100	3	M20	38	25	22	280	180	M20X55	4	240	380	60
17	250	249.5	270	8	826	110	4	M20	38	25	22	300	190	M20X55	4	250	415	60
18	275	274.5	295	9	826	120	4	M20	38	25	22	330	210	M20X55	4	275	415	60

Industrial Gear Units
Hollow Shafts for Parallel Key Connections
Types JRHB2
Sizes 4-18

Driven machine shaft for parallel key connertion keyway acc.to DIN 6885/1

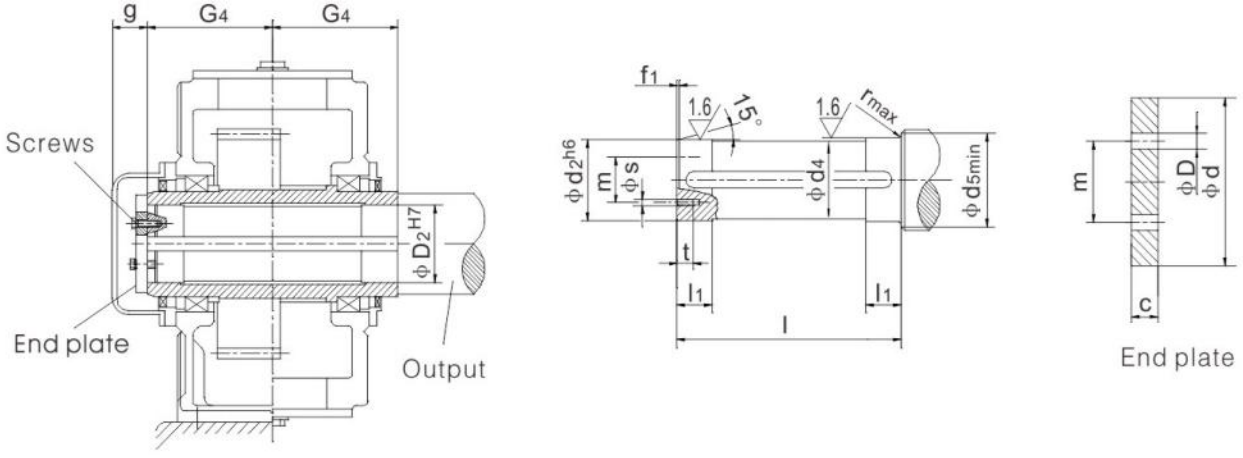

Type JRHB2H																			
Gear units	Driven machine shaft									End plate				Screw		Hollow shaft			
size	d_2	d_4	d_5	f_1	l	l_1	r	s	t	c	D	d	m	Size	Qty	D_2	G_4	g	
4	80	79.5	88	4	338	35	1.2	M10	18	10	11	100	60	M10X25	2	80	170	35	
5	95	94.5	105	5	398	40	1.6	M10	18	10	11	120	70	M10X25	2	95	200	40	
6	105	104.5	116	5	398	45	1.6	M10	18	10	11	120	70	M10X25	2	105	200	40	
7	115	114.5	126	5	468	50	1.6	M12	20	12	13.5	140	80	M12X30	2	115	235	40	
8	125	124.5	136	6	468	55	2.5	M12	20	12	13.5	150	85	M12X30	2	125	235	40	
9	135	134.5	147	6	537	60	2.5	M12	20	12	13.5	150	90	M12X30	2	135	270	45	
10	150	149.5	162	6	537	65	2.5	M12	20	12	13.5	185	110	M12X30	2	150	270	45	
11	165	164.5	177	7	637	70	2.5	M16	28	15	17.5	195	120	M16X40	2	165	320	45	
12	180	179.5	192	7	637	75	2.5	M16	28	15	17.5	220	130	M16X40	2	180	320	45	
14	210	209.5	226	8	777	85	3	M16	28	18	17.5	250	160	M16X40	2	210	390	45	
16	240	239.5	258	8	896	100	3	M20	38	25	22	280	180	M20X55	4	240	450	60	
18	275	274.5	295	9	1016	120	4	M20	38	25	22	330	210	M20X55	4	275	510	60	

Industrial Gear Units
Hollow Shafts for Shrink Disks
Types JRHH2,JRHH3,JRHH4,JRHB3,JRHB4
Sizes 4-22

X=Space required for torque wrench

Driven machine shaft for shrink disk connection.
Driven machine shaft must be free of oil or grease

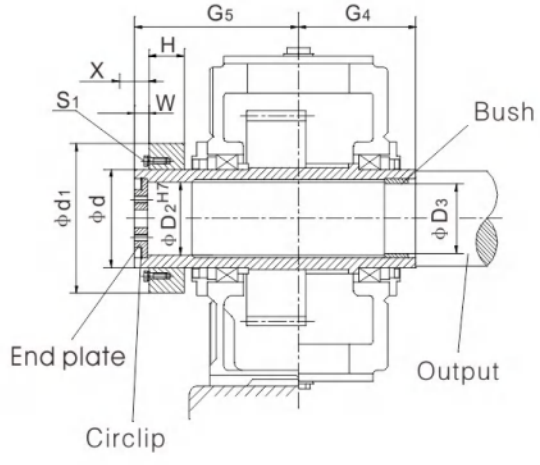

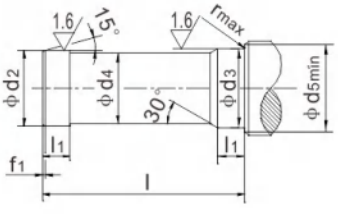

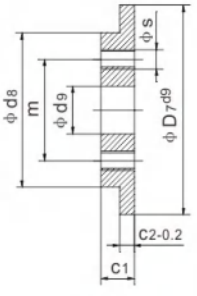

End plate

Types JRHH2D, JRHH3D, JRHH4D, JRHB3D, JRHB4D																											
Gear units	Driven machine shaft								End plate								Circlip	Hollow shaft				Shrink disk					Screw
size	d_2	d_3	d_4	d_5	f_1	l	l_1	r	c_1	c_2	D_7	d_8	d_9	m	s	Qty	DIN 472	D_2	D_3	G_4	G_5	Type	d	d_1	H	W	S_1
4	85g6	85h6	84.5	95	4	326	48	2	17	7	90	70	22	50	M8	2	90x3	85	85	140	205	110-32	110	185	51	20	M12
5	100g6	100h6	99.5	114	5	383	53	2	20	8	105	80	26	55	M10	2	105x4	100	100	165	240	125-32	125	215	53	20	M12
6	110g6	110h6	109.5	124	5	383	58	3	20	8	115	85	26	60	M10	2	115x4	110	110	165	240	140-32	140	230	58	20	M14
7	120g6	120h6	119.5	134	5	453	68	3	20	8	125	90	26	65	M12	2	125x4	120	120	195	280	155-32	155	263	62	23	M14
8	130g6	130h6	129.5	145	6	458	73	3	20	8	135	100	26	70	M12	2	135x4	130	130	195	285	165-32	165	290	68	23	M16
9	140g6	145m6	139.5	160	6	539	82	4	23	10	150	110	33	80	M12	2	150x4	140	145	235	330	175-32	175	300	68	28	M16
10	150g6	155m6	149.5	170	6	559	92	4	23	10	160	120	33	90	M12	2	160x4	150	155	235	350	200-32	200	340	85	28	M16
11	165f6	170m6	164.5	185	7	644	112	4	23	10	175	130	33	90	M12	2	175x4	165	170	270	400	220-32	220	370	103	30	M20
12	180f6	185m6	179.5	200	7	649	122	4	23	10	190	140	33	100	M16	2	190x4	180	185	270	405	240-32	240	405	107	30	M20
13	190f6	195m6	189.5	213	7	789	137	5	23	10	200	150	33	110	M16	2	200x4	190	195	335	480	260-32	260	430	119	30	M20
14	210f6	215m6	209.5	233	8	784	147	5	28	14	220	170	33	130	M16	2	220x5	210	215	335	480	280-32	280	460	132	30	M20
15	230f6	235m6	229.5	253	8	899	157	5	28	14	240	180	39	140	M16	2	240x5	230	235	380	550	300-32	300	485	140	35	M24
16	240f6	245m6	239.5	263	8	899	157	5	28	14	250	190	39	150	M20	2	250x5	240	245	380	550	320-32	320	520	140	35	M24
17	250f6	260m6	249.5	278	8	982	177	5	30	14	265	200	39	150	M20	2	265x5	250	260	415	600	340-32	340	570	155	35	M24
18	280f6	285m6	279.5	306	9	982	177	5	30	14	290	210	39	160	M20	2	290x5	280	285	415	600	360-32	360	590	162	35	M24
19	285f6	295m6	284.5	316	9	1100	187	5	32	15	300	220	39	170	M24	2	300x5	285	295	465	670	380-32	380	640	166	40	M27
20	310f6	315m6	309.5	336	9	1100	187	5	32	15	320	230	39	180	M24	2	320x6	310	315	465	670	390-32	390	650	166	40	M27
21	330f6	335m6	329	358	9	1160	205	5	40	20	340	250	45	190	M24	2	340x6	330	335	490	715	420-32	420	670	186	45	M27
22	340f6	345m6	339	368	9	1170	215	5	40	20	350	260	45	200	M24	2	350x6	340	345	490	725	440-32	440	720	194	45	M27

1) Shrink disk does not belong to our scope of supply.
If required,please refer to JIE.

Industrial Gear Units
Hollow Shafts for Shrink Disks
Types JRHB2
Sizes 4-18

X=Space required for torque wrench

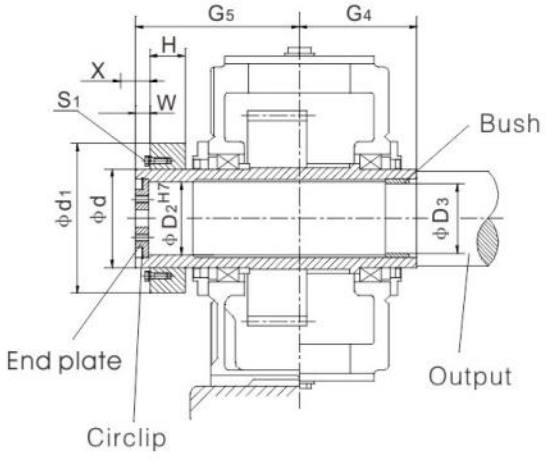

Driven machine shaft for shrink disk connection.
Driven machine shaft must be free of oil or grease

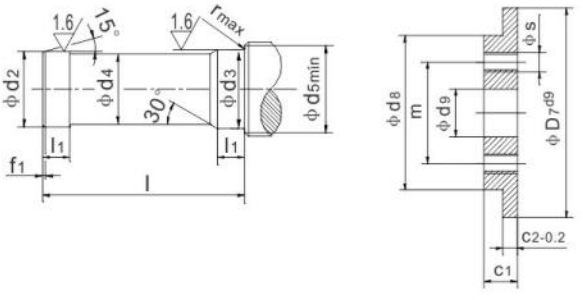

Type JRHB2D																												
Gear units	Driven machine shaft								End plate								Circlip	Hollow shaft				Shrink disk					Screw
size	d_2	d_3	d_4	d_5	f_1	l	l_1	r	c_1	c_2	D_7	d_8	d_9	m	s	Qty	DIN 472	D_2	D_3	G_4	G_5	Type	d	d_1	H	W	S_1
4	85g6	85h6	84.5	95	4	386	48	2	17	7	90	70	22	50	M8	2	90x3	85	85	170	235	110-32	110	185	51	20	M12
5	100g6	100h6	99.5	114	5	453	53	2	20	8	105	80	26	55	M10	2	105x4	100	100	200	275	125-32	125	215	53	20	M12
6	110g6	110h6	109.5	124	5	453	58	3	20	8	115	85	26	60	M10	2	115x4	110	110	200	275	140-32	140	230	58	20	M14
7	120g6	120h6	119.5	134	5	533	68	3	20	8	125	90	26	65	M12	2	125x4	120	120	235	320	155-32	155	263	62	23	M14
8	130g6	130h6	129.5	145	6	538	73	3	20	8	135	100	26	70	M12	2	135x4	130	130	235	325	165-32	165	290	68	23	M16
9	140g6	145m6	139.5	160	6	609	82	4	23	10	150	110	33	80	M12	2	150x4	140	140	270	365	175-32	175	300	68	28	M16
10	150g6	155m6	149.5	170	6	629	92	4	23	10	160	120	33	90	M12	2	160x4	150	155	270	385	200-32	200	340	85	28	M16
11	165f6	170m6	164.5	185	7	744	112	4	23	10	175	130	33	90	M12	2	175x4	165	170	320	450	220-32	220	370	103	30	M20
12	180f6	185m6	179.5	200	7	749	122	4	23	10	190	140	33	100	M16	2	190x4	180	185	320	455	240-32	240	405	107	30	M20
14	210f6	215m6	209.5	233	8	894	147	5	28	14	220	170	33	130	M16	2	220x5	210	215	390	535	280-32	280	460	132	30	M20
16	240f6	245m6	239.5	263	8	1039	157	5	28	14	250	190	39	150	M20	2	250x5	240	245	450	620	320-32	320	520	140	35	M24
18	280f6	285m6	279.5	306	9	1177	177	5	30	14	290	210	39	160	M20	2	290x5	280	285	510	700	360-32	360	590	162	35	M24

1) Shrink disk does not belong to our scope of supply.
If required,please refer to JIE.

Industrial Gear Units Cooling Coils Horizontal
Types JRHH..H,JRHH..M,JRHB..H,JRHB..M
Sizes 3-22

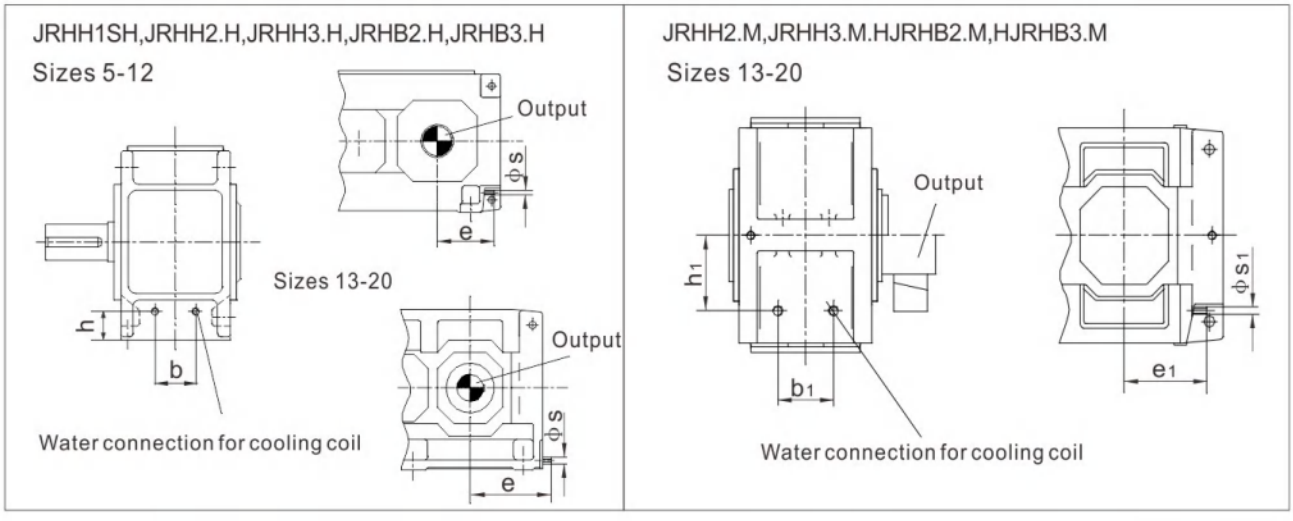

Size	Type JRHH1SH					Types JRHH2.H/JRHB3.H					Type JRHH3.H					Type JRHB2.H				
	b mm	e mm	h mm	s	1)	b mm	e mm	h mm	s	1)	b mm	e mm	h mm	s	1)	b mm	e mm	h mm	s	1)
3	48	205	74	G1/2	4	-	-	-	-	-	-	-	-	-	-	-	-	-	-	-
4	-	-	-	-	-	34	155	60	G1/2	4	-	-	-	-	-	74	160	54	G1/2	4
5	88	270	90	G1/2	4	68	170	64	G1/2	4	70	175	60	G1/2	4	130	175	62	G1/2	8
6	-	-	-	-	-	70	215	68	G1/2	4	70	220	69	G1/2	4	120	220	68	G1/2	4
7	124	310	135	G1/2	4	100	210	83	G1/2	4	80	210	83	G1/2	4	140	210	80	G1/2	8
8	-	-	-	-	-	100	270	83	G1/2	4	80	270	83	G1/2	4	140	270	80	G1/2	4
9	116	365	110	G1/2	8	140	245	110	G1/2	8	150	245	107	G1/2	4	232	245	110	G1/2	8
10	-	-	-	-	-	100	295	95	G1/2	8	90	295	95	G1/2	4	150	295	90	G1/2	8
11	146	425	130	G1/2	8	110	275	95	G1/2	8	200	275	115	G1/2	8	312	275	115	G1/2	8
12	-	-	-	-	-	200	360	109	G1/2	8	200	360	115	G1/2	8	300	360	115	G1/2	8
13	152	480	150	G1/2	8	252	455	116	G1/2	8	252	460	116	G1/2	8	324	460	116	G1/2	8
14	-	-	-	-	-	252	525	116	G1/2	8	252	530	116	G1/2	8	324	530	116	G1/2	8
15	172	560	130	G1/2	8	290	535	119	G1/2	8	290	540	119	G1/2	8	396	540	119	G1/2	8
16	-	-	-	-	-	290	580	119	G1/2	8	290	585	119	G1/2	8	396	585	119	G1/2	8
17	202	600	145	G1/2	8	340	575	134	G1/2	8	300	580	134	G1/2	8	468	580	134	G1/2	8
18	-	-	-	-	-	340	635	134	G1/2	8	300	640	134	G1/2	8	468	640	134	G1/2	8
19-22	On request					On request					On request									

规格 Size	类型/Types JRHH2.M/JRHB3.M					类型/Type JRHH3.M					类型/Type JRHB2.M				
	b_1 mm	e_1 mm	h_1 mm	s_1	1)	b_1 mm	e_1 mm	h_1 mm	s_1	1)	b_1 mm	e_1 mm	h_1 mm	s_1	1)
13	252	335	300	G1/2	8	252	335	300	G1/2	8	324	335	300	G1/2	8
14	252	405	300	G1/2	8	252	405	300	G1/2	8	324	405	300	G1/2	8
15	290	395	335	G1/2	8	290	395	340	G1/2	8	396	390	345	G1/2	8
16	290	440	335	G1/2	8	290	440	340	G1/2	8	396	435	345	G1/2	8
17	340	425	380	G1/2	8	300	425	380	G1/2	8	324	425	395	G1/2	8
18	340	485	380	G1/2	8	300	485	380	G1/2	8	324	485	395	G1/2	8
19-22	On request					On request									

1) Required cooling water quantity (L/min)
Cooling coil suitable for fresh,sea and brackish.

Industrial Gear Units Cooling Coils Vertifcal
Types JRHH..V,JRHB..V
Sizes 4-20

JRHH2.V,JRHH3.V,JRHB2.V,JRHB3.V Sizes 5-12

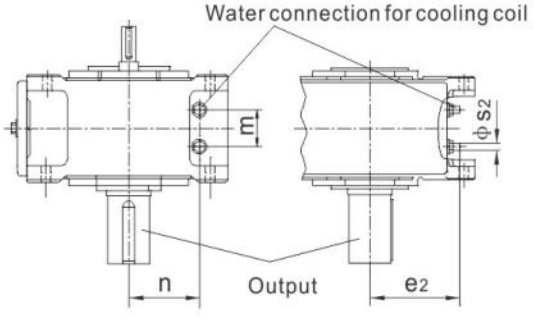

JRHH2.V,JRHH3.V,JRHB2.V,JRHB3.V Sizes 13-20

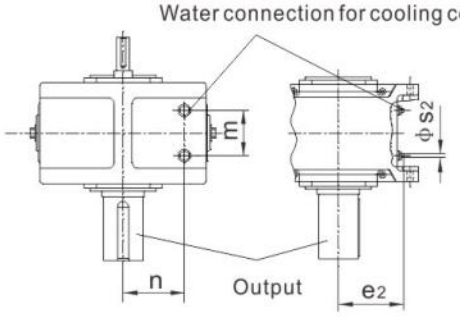

Size	Types JRHH2.V,JRHB3.V					Type JRHH3.V					Type JRHB2.V				
	m mm	n mm	e_2 mm	s_2	1)	m mm	n mm	e_2 mm	s_2	1)	m mm	n mm	e_2 mm	s_2	1)
4	34	140	155	G1/2	4	-	-	-	-	-	74	146	160	G1/2	4
5	68	166	170	G1/2	4	70	170	175	G1/2	4	130	168	175	G1/2	8
6	70	162	215	G1/2	4	70	161	220	G1/2	4	120	162	220	G1/2	4
7	100	197	210	G1/2	4	80	197	210	G1/2	4	140	200	210	G1/2	8
8	100	197	270	G1/2	4	80	197	270	G1/2	4	140	200	270	G1/2	4
9	140	210	245	G1/2	8	150	213	245	G1/2	4	232	210	245	G1/2	8
10	100	225	295	G1/2	8	90	225	295	G1/2	4	150	230	295	G1/2	8
11	110	285	275	G1/2	8	200	265	275	G1/2	8	312	265	275	G1/2	8
12	200	271	360	G1/2	8	200	265	360	G1/2	8	300	265	360	G1/2	8
13	252	300	335	G1/2	8	252	300	335	G1/2	8	324	300	335	G1/2	8
14	252	300	405	G1/2	8	252	300	405	G1/2	8	324	300	405	G1/2	8
15	290	335	395	G1/2	8	290	340	395	G1/2	8	396	345	390	G1/2	8
16	290	335	440	G1/2	8	290	340	440	G1/2	8	396	345	435	G1/2	8
17	340	380	425	G1/2	8	300	380	425	G1/2	8	324	395	425	G1/2	8
18	340	380	485	G1/2	8	300	380	485	G1/2	8	324	395	485	G1/2	8
19-20	On request					On request									

Type	Size	Cooling coil for: Dip lubrication, Design A	B	C	D	Forced lubrication with flanged on pump, Design A	B	C	D	Forced lubrication with motor pump, Design A	B	C	D
JRHH2.V	4-12 13-18	X -	X -	X -	X -	- -	X X	- -	X X				
JRHH3.V	4-12 13-18	X -	X -	X -	X -	- -	X X	- -	X X		On request		
JRHB2.V	4-12 13-18	X -	X -	X -	X -	X X	X X	- -	- -				
JRHB3.V	4-12 13-18	X -	X -	X -	X -	- -	- -	X X	X X				

X=Possible variants
1) Required cooling water quantity (L/min)
Cooling coil suitable for fresh,sea and brackish water.

Ⅱ. Product Ratio




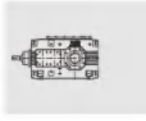

Helical gear Units Actual Ratios
Types JRHH1,JRHH2,JRHH3,JRHH4
Sizes 3-28

Actual Ratios i																											
iN	Gear unit sizes																										
	3	4	5	6	7	8	9	10	11	12	13	14	15	16	17	18	19	20	21	22	23	24	25	26	27	28
1.25	1.243		1.256		1.263		1.270																			
1.4	1.371		1.378		1.389		1.400																			
1.6	1.594		1.588		1.606		1.625		1.636		1.588															
1.8	1.829		1.839		1.774		1.800		1.806		1.839															
2	2.000		2.034		1.966		2.000		2.000		2.034		2.000		2.000		1.967									
2.24	2.194		2.259		2.308		2.231		2.222		2.259		2.231		2.250		2.296									
2.5	2.536		2.520		2.583		2.500		2.480		2.520		2.481		2.481		2.560									
2.8	2.808		2.826		2.800		2.741		2.783		2.826		2.760		2.760		2.870									
3.15	3.125		3.190		3.130		3.208		3.080		3.208		3.087		3.087		3.238									
3.55	3.500		3.591		3.524		3.591		3.478		3.591		3.476		3.476		3.450									
4	3.950		4.050		4.000		4.050		3.905		4.050		3.947		3.947		3.944									
4.5	4.473	4.487	4.619		4.400		4.381		4.421		4.619		4.579		4.526		4.400									
5	4.853	4.940	4.900		4.905		4.947		5.150		4.900		5.100		4.900		4.950									
5.6	5.492	5.444	5.556		5.526		5.684		5.474		5.556		5.778		5.556		5.700									
6.3	6.232	6.319	6.286		6.088		6.260		6.246		6.410		6.449		6.154		6.410				6.448		6.432			
7.1	7.100	6.857	7.213		7.048		7.247		6.900		7.100		7.120	7.316	7.125	7.147	7.100	7.312	7.200		7.222	7.242	7.102	7.323		
8	7.765	7.778	7.889	7.792	7.799	7.676	8.018	7.848	7.644	7.941	7.889	7.944	7.882	8.076	7.884	8.274	7.889	8.100	8.000	8.047	8.125	8.111	8.292	8.085	8.164	
9	8.516	8.485	8.652	8.940	8.660	8.887	8.904	9.085	8.974	8.772	8.799	8.800	8.758	8.941	8.755	9.155	8.799	9.000	8.923	8.941	8.961	9.125	9.244	9.440	8.949	9.295
10	9.845	9.722	10.002	9.778	9.660	9.833	9.932	10.053	10.046	9.718	9.861	9.778	9.774	9.935	9.765	10.167	9.788	10.038	9.926	9.973	9.967	10.064	10.362	10.524	10.146	10.188
11.2	10.900	10.694	11.075	10.724	10.648	10.920	11.138	11.163	10.889	11.410	10.811	10.906	10.967	11.087	10.951	11.340	10.887	11.167	11.040	11.094	11.147	11.193	11.693	11.797	11.594	11.550
12.5	12.132	12.444	12.326	12.397	11.807	12.180	12.574	12.452	12.174	12.773	12.655	12.222	12.139	12.440	12.432	12.717	12.176	12.420	12.348	12.339	12.553	12.519	12.458	13.312	12.734	13.199
14	13.588	13.865	13.806	13.726	13.939	13.426	14.152	13.964	13.704	13.844	14.164	13.399	13.708	13.769	13.915	14.438	13.712	13.891	13.905	13.801	14.254	14.098	14.244	14.183	14.657	14.497
16	15.335	15.556	15.581	15.278	15.717	14.887	15.962	15.765	15.556	15.478	15.975	15.685	15.389	15.550	15.694	16.159	15.570	15.643	15.789	15.541	16.345	16.009	15.889	16.216	16.651	16.686
18	17.378	17.602	17.493	17.111	17.598	17.576	18.204	17.743	17.111	17.423	17.280	17.556	17.424	17.457	17.899	18.225	18.061	17.763	18.316	17.647	17.694	18.357	17.875	18.089	17.843	18.957
20	19.616	19.444	19.534	19.311	19.742	19.817	19.312	20.012	19.074	19.778	19.515	19.800	20.297	19.765	18.988	20.786	20.117	20.605	20.400	20.471	19.328	19.872	19.218	20.350	19.183	20.314
22.4	21.630	22.037	22.006	21.681	20.982	22.189	21.895	22.824	21.491	21.756	22.020	21.418	21.374	23.024	20.930	22.050	21.782	22.950	22.368	22.800	23.325	21.778	22.623	22.129	23.817	21.799
25			25.011	24.212	25.540	24.892	25.439	24.212	24.706	24.251	25.372	24.187	24.716	24.245	24.202	24.306	25.283	24.850	25.837	25.000	25.750	26.196	26.190	25.755	26.382	27.115
28			28.490	27.275	27.711	26.456	29.187	27.451	28.602	27.325	29.373	27.292	27.304	28.036	26.736	28.106	28.006	28.844	28.523	28.877	28.509	28.919	28.979	29.817	29.314	30.035
31.5			31.161	30.999	31.433	32.202	31.924	31.894	31.648	31.412	32.501	31.447	30.248	30.971	29.619	31.048	31.117	31.950	31.579	31.879	31.676	32.018	32.180	32.991	32.696	33.373
35.5			34.177	35.312	34.291	34.940	35.013	36.593	35.144	36.366	36.092	36.406	35.514	34.311	34.776	34.397	34.708	35.500	35.088	35.294	35.351	35.575	35.894	36.636	36.371	37.223
40			39.508	38.622	39.292	39.633	40.474	40.024	39.200	40.238	40.257	40.283	39.756	40.284	38.929	40.385	38.897	39.596	39.158	39.216	39.664	39.702	40.254	40.864	40.453	41.407
45			43.745	42.360	43.221	43.236	44.816	43.897	43.210	44.683	45.147	44.733	43.090	45.096	42.194	45.208	42.642	44.375	43.936	43.765	43.904	44.546	45.699	45.828	45.245	46.054
50			48.689	48.967	50.293	49.542	49.881	50.744	47.911	49.840	50.968	49.896	48.175	48.878	47.174	49.000	49.917	48.648	48.632	49.105	49.580	49.307	51.148	52.026	50.950	51.510
56			54.532	54.220	56.033	54.496	55.866	56.187	56.566	54.938	57.365	55.957	54.229	54.647	53.102	54.783	55.870	56.948	54.920	54.353	55.660	55.683	57.688	58.230	57.856	58.005
63			61.543	60.347	62.867	63.413	63.049	62.537	63.778	60.916	64.699	63.171	61.557	61.514	60.278	61.667	63.013	63.739	61.654	61.381	63.019	62.510	65.793	65.675	67.113	65.867
71			69.742	67.589	71.139	70.651	70.787	70.041	71.414	71.919	73.789	71.100	67.713	69.826	66.306	70.000	68.162	71.888	69.806	68.908	73.410	70.776	69.795	74.903	74.750	76.406
80			78.723	76.279	78.583	79.267	79.049	79.046	80.111	81.089	78.278	80.190	75.481	76.809	73.912	77.000	76.974	77.762	81.316	78.019	78.024	82.445	79.132	79.459	84.684	85.100
90			86.806	86.440	89.061	89.696	89.050	88.748	85.146	90.798	88.750	91.457	85.046	85.620	83.279	85.833	88.439	87.816	86.427	90.882	85.226	87.627	85.076	90.089	91.045	96.410
100				97.572	101.554	99.083	101.210	99.106	103.639	101.856	103.114	97.020	97.768	96.471	95.735	96.711	100.079	100.895	99.020	96.594	98.752	96.030	103.838	97.967	104.514	103.460
112				107.590	115.256	112.294	115.290	111.645	112.450	108.257	118.306	110.000	113.186	110.901	110.833	111.176	115.862	114.174	109.386	110.670	109.401	110.906	115.375	118.215	115.712	118.985
125					125.733	128.046	126.098	126.890	127.556	131.769	129.398	127.803	125.238	128.390	122.634	128.710	128.198	132.180	121.182	122.255	128.446	122.865	128.688	131.350	128.569	131.734
140					143.985	145.322	138.301	144.542	139.152	142.973	141.920	146.633	139.074	142.060	136.183	142.414	142.362	146.254	142.279	135.439	143.788	144.255	144.219	146.506	143.483	146.371
160					158.251	158.533	159.874	158.093	159.444	162.178	164.058	160.380	155.125	157.756	151.900	158.148	158.792	162.413	159.273	159.017	155.848	161.485	158.107	164.188	160.991	163.350
180					174.630	181.546	177.022	173.392	175.389	176.921	181.654	175.901	170.993	175.962	167.438	176.400	178.079	181.156	172.632	178.011	174.240	175.029	185.081	179.998	178.197	183.282
200					193.629	199.533	197.028	200.439	204.089	202.722	202.184	203.339	189.597	193.962	185.656	194.444	201.040	203.160	193.004	192.941	196.135	195.685	207.151	210.707	201.238	202.870
224					228.606	220.185	220.671	221.938	227.382	222.994	226.446	225.149	223.845	215.065	219.192	215.600	226.272	229.355	217.257	215.711	222.640	220.275	233.634	235.833	225.914	229.102
250					257.753	244.141	249.043	247.020	255.111	259.484	255.560	250.594	252.385	253.914	247.139	254.545	255.201	258.141	246.617	242.817	244.904	250.042	252.726	265.984	255.785	257.195
280					288.615	288.242	282.219	276.663	288.678	289.100	286.925	280.665	282.605	286.288	276.730	287.000	291.058	291.144	271.278	275.630	272.999	275.046	285.401	287.719	297.959	291.201
315					305.352	324.993	318.563	312.234	318.889	324.356	320.413	316.751	317.021	320.566	310.431	321.364	308.761	332.052	302.399	303.193	307.595	306.599	327.908	324.919	316.686	339.214
355					344.112	363.906	351.273	353.827	361.407	367.034	360.951	355.625	336.946	359.606	329.942	360.500	350.069	352.249	340.720	337.975	335.988	345.452	352.538	373.311	340.473	360.535
400						385.010		399.393		405.444		397.131		382.207		383.158		399.375		380.805		378.578		405.953		386.901
450						433.881		440.402		459.504		447.376														

Bevel-helical gear Units Actual Ratios
Types JRHB2,JRHB3,JRHB4
Sizes 4-28






Actual Ratios i																									
i_N	Gear unit sizes																								
	4	5	6	7	8	9	10	11	12	13	14	15	16	17	18	19	20	21	22	23	24	25	26	27	28
5	4.936	5.006		4.865		5.002		4.897		4.967		4.963													
5.6	5.48	5.488		5.333		5.483		5.534		5.613		5.609	5.630	5.514											
6.3	6.296	6.386	6.205	6.206	6.135	6.381	6.271	6.296	6.226	6.386	6.156	6.340	6.362	6.234											
7.1	6.959	7.058	6.802	6.860	6.725	7.053	6.875	7.037	7.036	7.138	6.957	7.132	7.192	7.012	7.239										
8	7.549	7.657	7.915	7.880	7.825	8.101	8.000	7.994	8.005	8.108	7.915	8.101	8.090	7.965	8.143										
9	8.693	8.817	8.749	8.569	8.649	8.810	8.842	8.693	8.947	8.817	8.847	8.810	9.190	8.662	9.250										
10	9.872	10.108	9.490	9.823	9.935	10.099	10.157	9.965	10.164	10.108	10.049	10.099	9.993	9.930	10.059										
11.2	10.769	10.923	10.928	10.615	10.804	10.914	11.045	10.769	11.052	10.923	10.928	10.914	11.456	10.731	11.531										
12.5	12.034	12.703	12.528	12.433	12.385	12.554	12.662	12.334	12.670	12.482	12.528	12.172	12.380	12.770	12.462	12.062		12.256							
14	13.484	13.964	13.538	13.515	13.385	14.137	13.683	13.821	13.692	13.721	13.538	13.810	13.832	13.790	14.654	13.709	13.698	13.902	13.719						
16	15.601	15.835	15.826	16.275	15.773	15.952	15.693	15.522	15.888	16.354	15.552	15.215	15.665	16.226	16.014	15.192	15.640	15.436	15.538						
18	17.482	17.407	17.307	17.692	17.041	17.963	17.724	17.393	17.572	17.978	17.007	17.262	17.290	17.522	18.620	17.267	17.252	17.51	17.279						
20	19.614	19.645	19.729	19.948	20.648	20.259	19.940	19.744	19.995	20.276	20.376	19.379	19.581	19.762	20.348	19.607	19.698	19.883	19.57	20.285		20.27		20.764	
22.4	21.919	21.954	21.575	22.146	22.308	22.208	22.520	21.643	22.114	22.226	22.282	21.900	21.982	22.333	22.950	22.158	22.368	22.47	22.222	22.931	22.782	22.914	23.077	23.578	23.639
25	25.38	25.421	24.349	25.446	25.152	25.843	25.400	25.185	25.103	25.864	25.131	24.916	24.842	25.409	25.936	25.048	25.278	25.4	25.113	25.794	25.753	25.775	26.087	26.522	26.843
28	27.836	27.881	27.211	28.125	27.923	28.563	27.842	27.836	27.517	28.587	27.548	27.847	28.263	28.398	29.507	28.175	28.576	28.571	28.389	29.301	28.968	29.279	29.343	30.128	30.194
31.5	30.196	30.245	31.508	30.509	32.084	30.985	32.400	31.975	32.021	32.838	32.057	31.634	31.588	32.259	32.979	32.005	32.143	32.456	31.933	31.863	32.907	31.839	33.333	32.762	34.3
35.5	34.771	34.827	34.557	35.131	35.461	35.679	35.811	34.771	35.392	35.709	35.432	34.400	35.883	35.080	37.463	34.804	36.513	35.294	36.275	34.804	35.784	36.5	36.248	37.558	37.299
40	39.487	39.551	37.486	39.896	38.468	40.902	38.846	39.861	40.654	40.936	40.700	39.435	39.021	40.215	40.738	39.899	39.706	40.461	39.446	39.899	39.216	39.444	41.554	40.588	42.759
45	43.077	43.146	43.166	43.523	44.296	44.202	44.732	43.077	44.209	44.238	44.259	42.617	44.732	43.460	46.702	43.117	45.518	43.725	45.221	43.117	44.956	44.923	44.906	46.225	46.208
50	49.06	49.139	49.021	49.568	50.304	50.341	51.280	49.060	50.681	50.383	50.737	48.536	48.341	49.496	50.469	49.106	49.190	49.798	48.869	49.106	48.583	50.501	51.143	51.965	52.626
56	55.152	55.240	53.477	55.723	54.877	56.592	55.417	55.152	54.769	56.639	54.831	54.562	55.055	55.641	57.479	55.203	56.022	55.981	55.656	55.203	55.331	55.68	57.493	57.295	59.16
63	60.808	60.906	60.904	61.438	62.499	62.396	63.114	60.808	62.376	62.448	62.446	60.158	61.892	61.348	64.616	60.865	62.978	61.722	62.567	60.865	62.201	63.45	63.39	65.29	65.228
71	69.293	69.404	68.467	70.011	70.259	71.102	70.951	69.293	70.121	71.161	70.200	68.553	68.239	69.909	71.243	69.358	69.438	70.335	68.984	69.358	68.581	68.216	72.235	70.194	74.33
80		77.598	75.489	79.267	77.465	79.497	78.228	80.949	77.313	82.118	77.400	78.131	77.761	76.506	81.184	79.977	79.127	77.639	78.61	79.208	78.15	82.094	78.551	82.334	79.766
90		86.720	86.022	88.585	88.274	88.842	89.143	89.869	88.101	90.016	88.200	85.645	88.626	83.865	88.846	87.670	91.242	87.739	86.772	90.116	88.957	93.399	93.461	93.073	93.734
100		100.413	96.178	102.572	99.945	102.869	99.667	103.259	102.921	104.750	101.780	99.664	97.150	97.593	97.391	102.020	100.017	99.821	98.061	100.718	101.207	104.387	106.331	104.692	105.96
112		110.130	107.484	112.498	111.694	112.824	111.384	114.129	114.262	115.777	111.569	110.155	113.052	107.865	113.333	112.759	116.389	111.565	111.565	114.412	113.114	118.58	118.841	118.926	119.188
125		119.466	124.455	122.035	129.330	122.389	128.971	123.804	131.287	125.592	129.831	126.535	124.952	123.904	125.263	129.526	128.641	126.733	124.69	124.416	128.494	128.949	134.999	129.325	135.393
140		137.567	136.499	140.525	141.846	140.933	141.452	142.562	145.106	144.621	143.498	137.599	143.532	134.739	143.889	140.851	147.769	137.815	141.643	142.629	139.729	147.824	146.803	148.256	147.232
160		156.225	148.071	159.585	153.871	160.047	153.443	161.897	157.408	165.791	155.663	157.741	156.082	154.462	156.471	161.470	160.690	157.989	154.029	154.135	160.183	159.75	168.292	160.217	168.784
180		170.427	170.506	174.092	177.184	174.597	176.692	176.615	181.258	179.166	179.248	170.467	178.930	166.923	179.375	174.496	184.212	170.735	176.576	175.543	173.106	181.938	181.869	182.469	182.401
200		194.098	193.631	198.272	201.215	198.847	200.656	201.145	205.841	204.050	205.487	194.143	193.365	190.107	193.846	198.732	199.073	194.448	190.821	197.34	197.148	204.528	207.129	205.126	207.734
224		218.199	211.234	222.891	219.508	223.537	218.898	226.121	224.554	229.386	222.065	218.249	220.222	213.712	220.769	223.408	226.722	218.592	217.324	217.58	221.628	225.506	232.848	226.165	233.528
250		240.578	240.572	245.752	249.995	246.464	249.300	249.313	255.742	252.913	252.907	240.634	247.566	235.631	248.182	246.322	254.874	241.641	244.309	247.94	244.359	256.972	256.73	257.722	257.48
280		274.147	270.443	280.042	281.036	280.855	280.256	284.101	287.497	288.204	284.310	274.210	272.957	268.510	273.636	280.692	281.015	274.641	269.366	273.24	278.456	283.193	292.552	284.021	293.407
315		302.121	298.181	308.618	309.861	309.513	309.000	313.091	316.984	317.612	313.470	302.191	311.045	295.909	311.818	309.334	320.226	302.666	306.952	298.462	306.869	304.465	322.405	305.354	323.347
355			339.788		353.097		352.116		361.214		357.210		342.784		343.636		352.902		338.273		336.295		350.596		346.993
400			374.460		389.127		388.046		398.073		393.660														

九. Product Layout Form

Industrial Gear Units Assembiles
Types JRHH2...JRHH4,JRHB2...JRHB4
Sizes 3-28

Helical gear units

JRHH.SH
JRHH.SV Solid shaft

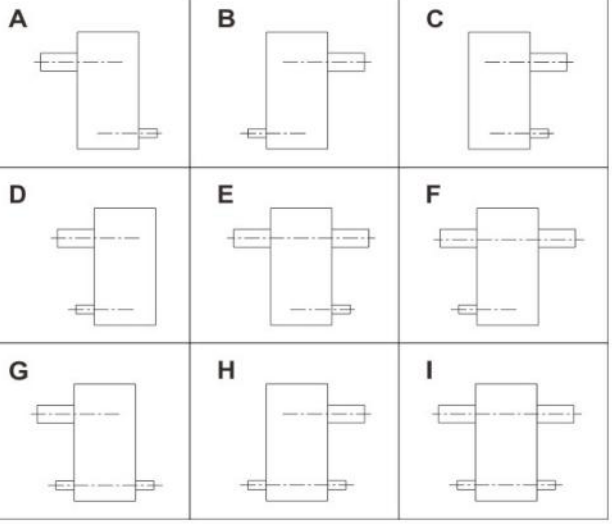

JRHH.DH
JRHH.DM Hollow Shaft for shrink disk *)
JRHH.DV

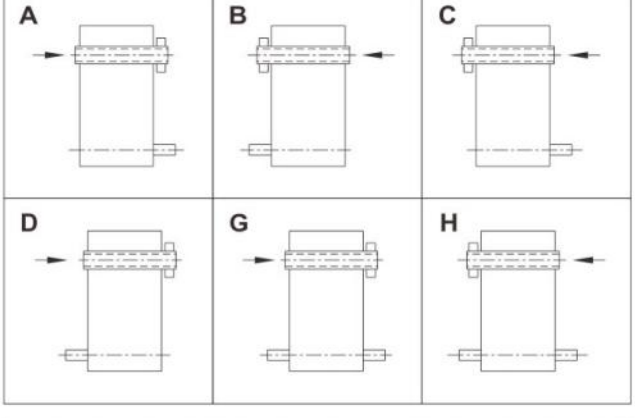

JRHH.HH
JRHH.HM Hollow Shaft *)
JRHH.HV

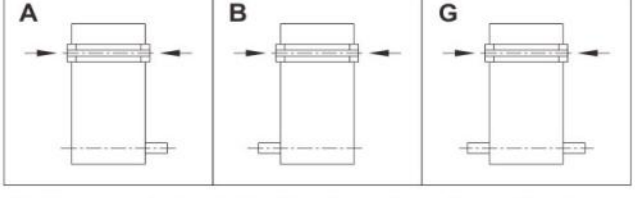

Bevel-helical gear units

JRHB.SH
JRHB.SV Solid shaft

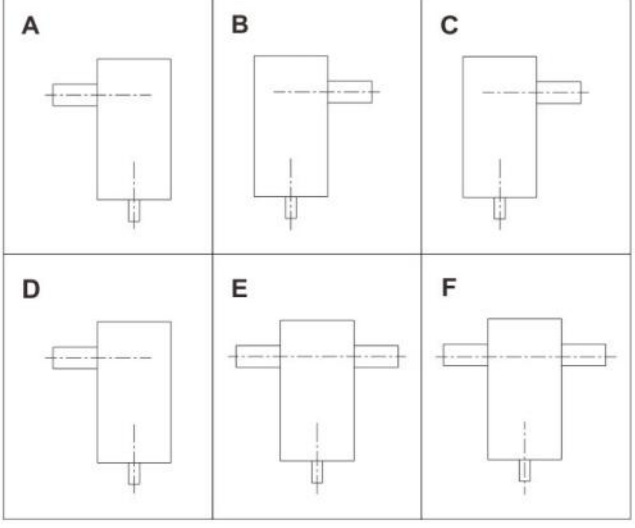

JRHB.DH
JRHB.DM Hollow Shaft for shrink disk *)
JRHB.DV

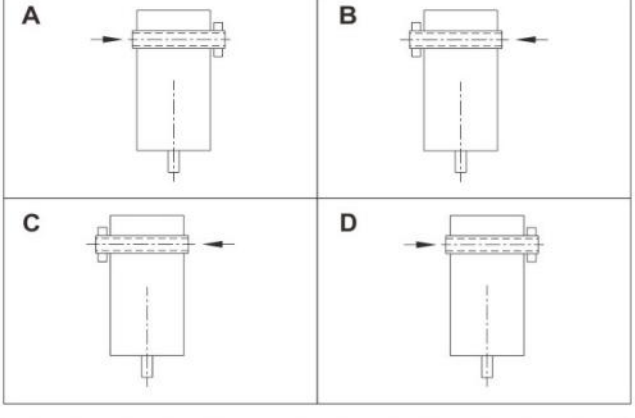

JRHB.HH
JRHB.HM Hollow Shaft *)
JRHB.HV

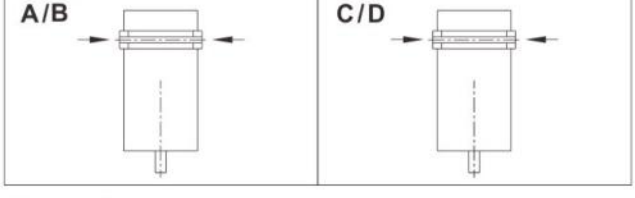

*) The arrow indicate the direction of insertion of the driven machine shaft.

+. Lubrication






Industrial Gear Units Oil Supply for
Types JRHH2...JRHH4,JRHB2...JRHB4
Sizes 4-18 Vertical

Oil supply variants for vertical gear units can be derived from table 1.

Table 1

1) Types	Size	Dip lubrication	Forced lubrication, flanged-on pumb	Forced lubrication, motor pump
JRHH2.V	4...12 13...18	X -	X X	- -
JRHH3.V	4...12 13...18	X -	X X	X X
JRHH4.V	7...12 13...18	X -	X -	X X
JRHB2.V	4...12 13...18	X -	X X	X X
JRHB3.V	4...12 13...18	X -	X X	X X
JRHB4.V	5...12 13...18	X -	X -	X X

X=Possible variants

1)For possible variants for gear units with solid shaft and oil retaining tube,see page 116,table 14.

Preferred order:

up to size6:dip lubrication from size7 up:forced lubrication

Notes on the individual oil supply variants Dip lubrication:

in case of dip lubrication,all parts to be lubricated are lying in the oil.an oil compensating tank has been fitted for oil ex-pansion.criteria for selection,see page 110

Forced lubrication:

In case of forced lubrication,all parts which are not lying in oil are splash lubricated by means of a flanged -on pump or by a separate motor pump.criteria for selction,
see pages 111-114

Industrial Gear Units Dip Lubrication for Types JRHH2...JRHH4,JRHB2...JRHB4 Sizes 4-12 Vertical






For the design with dip lubrication the following criteria have to be observed:
a)Maximum input speed n1max (r/min),See table2.
b)Permissible oil temperatures,see table 3.

Table 2

Size	Type											
	JRHH2.V		JRHH3.V		JRHH4.V		JRHB2.V		JRHB3.V		JRHB4.V	
	i_N	n_{1max}	i_N	n_{1max}	i_N	n_{1max}	i_N	n_{1max}	i_N	n_{1max}	i_N	n_{1max}
4	6.3-10 11.2-12.5 14-22.4	1200 1500 1800	-		-		5-5.6 6.3-7.1 8-9 10-11.2	750 900 1000 1200	12.5-71	1800	-	
5	6.3-9 10-12.5 14-16 18-22.4	1000 1200 1500 1800	25-90	1800	-		6.3-7.1 8-9 10-11.2	750 900 1000	12.5-71	1800	80-315	1800
6	8-11.2 12.5-16 18-20 22.4-28	1000 1200 1500 1800	31.5-112	1800	-		9 10-11.2 12.5-14	750 900 1000	16-90	1800	100-400	1800
7	6.3-7.1 8-9 10-11.2 12.5-16 18-22.4	750 900 1000 1200 1500	25-90	1800	100-355	1800	9-10 11.2	750 900	12.5-25 28-71	1500 1800	80-315	1800
8	8-9 10-11.2 12.5-14 16-20 22.4-28	750 900 1000 1200 1500	31.5-112	1800	125-450	1800	11.2-12.5 14	750 900	16-31.5 35.5-90	1500 1800	100-400	1800
9	6.3-7.1 8-10 11.2-22.4	1200 1500 1800	25-90	1800	100-355	1800	5-5.6 6.3-7.1 8-10 11.2	900 1000 1200 1500	12.5-71	1800	80-315	1800
10	8-9 10-12.5 14-28	1200 1500 1800	31.5-112	1800	125-450	1800	6.3-7.1 8-9 10-12.5 14	900 1000 1200 1500	16-90	1800	100-400	1800
11	6.3-7.1 8-10 11.2-12.5 14-22.4	1000 1200 1500 1800	25-90	1800	100-355	1800	5.6-6.3 7.1-8 9-10 11.2	750 900 1000 1200	12.5-22.4 25-71	1500 1800	80-315	1800
12	8-9 10-12.5 14-16 18-28	1000 1200 1500 1800	31.5-112	1800	125-450	1800	7.1-8 9-10 11.2-12.5 14	750 900 1000 1200	16-28 31.5-90	1500 1800	100-400	1800

Gear units with n1and iN which are not listed in table 2 must be designed for forced lubrication

Table 3

Viscosity ISO-VG at 40℃ in mm^2/s(cst)	Permissible temperature in℃ for dip lubrication	
	Mineral oil	Synthetic oil
VG 220	-15	-25
VG 320	-12	-25
VG 460	-9	-25

If the temperatures are below the values as listed in the table,the oil must be heated.
In case of dip lubrication,the oil temperature must not blow the pour point of the selected oil.

Helical gear Units Forced Lubrication for
Types JRHH2...JRHH4
Sizes 5-18 Vertical






Table 4

Viscosity ISO-VG at 40℃ in mm^2/s(cst)	Permissible temperature limit in℃ for forced feed lubrlcation			
	Mineral oil		Synthetic oil	
	Min	Max	Min	Max
VG 220	10	80	0	90
VG 320	15	90	5	100
VG 460	20	95	10	105

Forced lubrication:
In case of forced lubrication,the operating Viscosity 1800 cst must not be exceeded during starting.Aminimum operating of 25cst must been sured.If the temperatures are below the values as listed in table4,dip Lubrication has to be proviede or the oil must Beheated.

Table 5 Assignment of flanged-on pumps to vertical helical gear units

Type	n_1 r/min	Gear unit size		Flanged-on pump size	Gear unit size			Flanged-on pump size
		5, 7, 9, 11	6, 8, 10, 12		13, 15, 17	14	16, 18	
		Ratio i_N			Ratio i_N			
JRHH2.V[1)]	750-1800	6.3-22.4	8-28		6.3-22.4	8-28	7.1-25	
JRHH3.V[1)]	1201-1800	25-35.5	31.5-45		22.4-35.5	28-45	25-40	
		40-71	50-90		40-71	50-90	45-80	
		80-90	100-112	*	80-90	100-112	90-100	*
	901-1200	25-50	31.5-63		22.4-25	28-31.5	25-28	
		56-90	71-112	*	28-45	35.5-56	31.5-50	
					50-90	63-112	56-100	*
	720-900	25-35.5	31.5-45		22.4-35.5	28-45	25-40	
		40-90	50-112	*	40-90	50-112	45-100	*
JRHH4.V[1)]	1201-1800	100-180	125-224		100-355	125-450	112-400	*
		200-355	250-450	*				
	901-1200	100-125	125-160					
		140-355	180-450	*				
	750-900	100-355	125-450	*				

Motor pump required see table 7

1) Design B,D.

Helical gear Units Forced Lubrication for
Types JRHH2...JRHH4
Sizes 5-18 Vertical






Table 6 Assignment of flanged-on pumps to vertical helical gear units

Type	n_1 r/min	Gear unit size		Flanged-on pump size	Gear unit size			Flanged-on pump size
		5, 7, 9, 11	6, 8, 10, 12		13, 15, 17	14	16, 18	
		Ratio i_N			Ratio i_N			
JRHH2.V[1)]	750-1800	6.3-22.4	8-28		6.3-22.4	8-28	7.1-25	
JRHH3.V[1)]	1201-1800	25-40	31.5-50		22.4-50	28-63	25-56	
		45-90	56-112		56-90	71-112	63-90	
							100	*
	901-1200	25-56	31.5-71		22.4-31.5	28-40	25-35.5	
		63-90	80-112	*	35.5-56	45-71	40-63	
					63-90	80-112	71-100	*
	750-900	25-45	31.5-56		22.4-25	28-31.5	25-28	
		50-90	63-112	*	28-45	35.5-56	31.5-50	
					50-90	63-112	56-100	*
JRHH4.V[1)]	1201-1800	100-224	125-280		100-355	125-450	112-400	*
		250-355	315-450	*				
	901-1200	100-140	125-180					
		160-355	200-450	*				
	750-900	100-112	125-140					
		125-355	160-450	*				
Motor pump required see table 7								

1) Design A,C.

Table 7 Assignment of flanged-on pumps to vertical helical gear units

Type	Size	Pump
JRHH2.V	5···18	1)
JRHH3.V		SF 2/8
JRHH4.V	7···12	
	13···18	SF 2/13

1) Flanged-on pump only

Bevel-helical gear Units Forced Lubrication for
Types JRHB2...JRHB4
Sizes 5-18 Vertical






Table 8

Viscosity ISO-VG at 40℃ in mm^2/s(cst)	Permissible temperature limit in℃ for forced feed lubrication			
	Mineral oil		Synthetic oil	
	Min	Max	Min	Max
VG 220	10	80	0	90
VG 320	15	90	5	100
VG 460	20	95	10	105

Forced lubrication:
In case of forced lubrication,the operating Viscosity 1800 cst must not be exceeded during starting.Aminimum operating of 25cst must been sured.If the temperatures are below the values as listed in table4,dip Lubrication has to be proviede or the oil must Beheated.

Table 9 Assignment of flanged-on pumps to vertical helical gear units

Type	n_1 r/min	Gear unit size		Flanged on pump size	Gear unit size			Flanged on pump size
		5, 7, 9, 11	6, 8, 10, 12		13, 15, 17	14	16, 18	
		Ratio i_N			Ratio i_N			
JRHB2.V[1)]	1201-1800	5-6.3	6.3-8		5-8	6.3-10	5.6-9	
		7.1-11.2	9-14		9-11.2	11.2-14	10-12.5	
	901-1200	5-8	6.3-10		5	6.3	5.6	
		9-11.2	11.2-14		5.6-11.2	7.1-14	6.3-12.5	
	750-900	5-6.3	6.3-8		5-10	6.3-12.5	5.6-11.2	
		7.1-10	9-12.5		11.2	14	12.5	*
		11.2	14	*				
JRHB3.V[2)]	1201-1800	12.5-35.5	16-45		12.5-35.5	16-45	14-40	
		40-71	50-90		40-71	50-90	45-80	
	901-1200	12.5-25	16-31.5		12.5-25	16-31.5	14-28	
		28-50	35.5-63		28-50	35.5-63	31.5-56	
		56-71	71-90	*	56-71	71-90	63-80	*
	750-900	12.5-35.5	16-45		12.5-35.5	16-45	14-40	
		40-71	50-90	*	40-71	50-90	45-80	*
JRHB4.V[1)]	1201-1800	80-125	100-160		80-135	100-400	90-355	*
		140-250	180-315					
		280-315	355-400	*				
	901-1200	80-180	100-224					
		200-315	250-400	*				
	750-900	80-125	100-160					
		140-315	180-400	*				
Motor pump required see table 11								

1) Design A,B.
1) Design C,D.

Bevel-helical gear Units Forced Lubrication for
Types JRHB2...JRHB4
Sizes 5-18 Vertical






Table 10 Assignment of flanged-on pumps to vertical bevel-helical gear units

Type	n_1 r/min	Gear unit size		Flanged on pump size	Gear unit size			Flanged on pump size
		5, 7, 9, 11	6, 8, 10, 12		13, 15, 17	14	16, 18	
		Ratio i_N			Ratio i_N			
JRHB2.V[1)]	1201-1800	5-6.3	6.3-8		5-6.3	6.3-8	5.6-7.1	
		7.1-11.2	9-14		7.1-11.2	9-14	8-12.5	
	901-1200	5-8	6.3-10		5-10	6.3-12.5	5.6-11.2	
		9-11.2	11.2-14		11.2	14	12.5	*
	750-900	5-6.3	6.3-8		5-7.1	6.3-9	5.6-8	
		7.1-10	9-12.5		8-11.2	10-14	9-12.5	*
		11.2	14	*				
JRHB3.V[2)]	1201-1800	12.5-35.5	16-45		12.5-22.4	16-28	14-25	
		40-71	50-90		25-50	31.5-63	28-56	
					56-71	71-90	63-80	
	901-1200	12.5-25	16-31.5		12.5-35.5	16-45	14-40	
		28-50	35.5-63		40-56	50-71	45-63	
		56-71	71-90	*	63-71	80-90	71-80	*
	750-900	12.5-35.5	16-45		12.5-25	16-31.5	14-28	
		40-71	50-90	*	28-40	35.5-50	31.5-45	
					45-71	56-90	50-80	*
JRHB4.V[1)]	1201-1800	80-180	100-224		80-315	100-400	90-355	*
		200-315	250-400	*				
	901-1200	80-125	100-160					
		140-315	180-400	*				
	750-900	80-90	100-112					
		100-315	125-400	*				
Motor pump required see table 11								

1) Design C,D
2) Design A,B

Table 11 Assignment of motor pumps to vertical bevel-helical gear units

Type	Size	Pump
JRHB2.V	5...12	SF 2/5
	13...18	SF 2/8
JRHB3.V	5...18	
JRHB4.V	5...12	
	13...18	SF 2/13

Industrial Gear Units Forced lubrication by motor pump
Types JRHH3, JRHH4, JRHB2, JRHB3, JRHB4
Sizes 5-18 Vertical

JRHH3.V,JRHH4.V

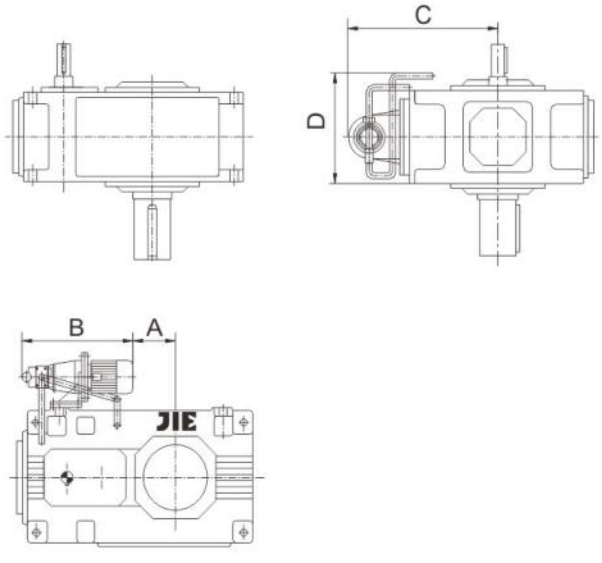

JRHB2.V,JRHB3.V,JRHB4.V

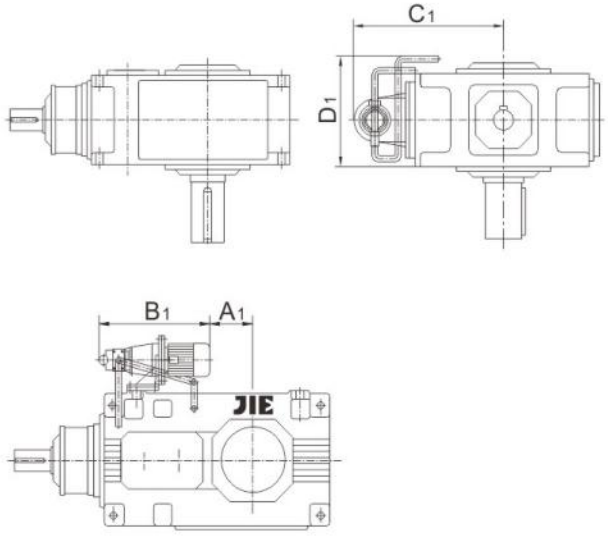

Table 12 Mounting dimensions on (mm)

Type	Size	A	B	C	D
JRHH3.V	5/6	-25/10	560	495	350
	7/8	55/100	595	545	425
	9/10	140/190	615	585	495
	11/12	375/445	535	645	560
	13/14	155/225	875	695	680
	15/16	275/320	960	735	745
	17/18	250/310	1035	795	810
JRHH4.V	5/6	-	-	-	
	7/8	55/100	590	545	425
	9/10	140/190	630	585	495
	11/12	375/445	560	645	560
	13/14	135/205	910	695	665
	15/16	255/300	995	735	745
	17/18	230/280	1070	795	810

Table 13 Mounting dimensions on (mm)

Type	Size	A_1	B_1	C_1	D_1
JRHB2.V	5/6	-160/-120	475	495	450
	7/8	5/50	475	545	540
	9/10	60/110	475	585	560
	11/12	150/220	475	645	645
	13/14	-70/0	530	690	810
	15/16	15/60	530	730	920
	17/18	-5/55	530	790	1025
JRHB3.V	5/6	-85/-50	475	495	375
	7/8	-5/40	475	545	435
	9/10	65/115	475	585	505
	11/12	280/350	475	645	565
	13/14	90/160	530	690	680
	15/16	175/220	530	730	755
	17/18	220/280	530	790	815
JRHB4.V	5/6	-35/0	475	495	360
	7/8	55/100	475	545	425
	9/10	140/190	475	585	495
	11/12	375/445	475	645	560
	13/14	135/205	530	695	665
	15/16	255/300	530	735	745
	17/18	230/290	530	795	810

Industrial Gear Units

Oil Supply for Gear Units With Solid Shaft and Oil Retaining
Types JRHH2...JRHH3, JRHB2... JRHB4
Sizes 5-18 Vertical






Table 14 Possible oil supply variants

Type	Size	Design	
		B	C
JRHH2SV	5-6	O[1)]	-
	7-12	O[2)]	-
	13-18	O[3)]	-
JRHH3SV	5-6	O	-
	7-12	O	-
	13-18	O	-
JRHB2SV	5-6	-	O
	7-12	-	O
	13-18	-	O
JRHB3SV	5-6	-	O
	7-12	-	O
	13-18	-	O
JRHB4SV	5-6	-	O
	7-12	-	O
	13-18	-	O

- =Design impossible

O =Forced lubrication possible

1) For size 5 only possible up to i≤16

2) For size 7 only possible up to i≤16

For size 11 only possible up to i≤18

3) For size 13 only possible up to i≤18

For size 17 only possible up to i≤16






Industrial Gear Units
Selection of Oil Table

Oil	DIN51519 Viscosity ISO-VG At40℃ in mm /s, standard DIN 51519 2	Oil selection example					
		TOTAL	Mobil	Shell	bp		KunLun
Synthetic oil	VG680	TOTAL CARTER SH680	GLYGOYLE HE 680	SHELL OMALA HD680			
	VG460	TOTAL CARTER SH460	GLYGOYLE HE 460	SHELL OMALA HD460	ENERSYN SG-XP460		
	VG320	TOTAL CARTER SH320	GLYGOYLE HE320	SHELL OMALA HD320			
	VG220	TOTAL CARTER SH220	GLYGOYLE 30	SHELL OMALA HD220	ENERSYN SG-XP220		
	VG150		GLYGOYLE 22				
	VG100						
Mineral oil	VG680	TOTAL CARTER EP680	MOBIL GEAR 636	SHELL OMALA 680	ENERGOL GR-XF680	CKD680	CKD680
	VG460	TOTAL CARTER EP460	MOBIL GEAR 634	SHELL OMALA 460	ENERGOL GR-XF460	CKD460	CKD460
	VG320	TOTAL CARTER EP320	MOBIL GEAR 632	SHELL OMALA 320	ENERGOL GR-XF320	CKD320	CKD320
	VG220	TOTAL CARTER EP220	MOBIL GEAR 630	SHELL OMALA 220	ENERGOL GR-XF220	CKD220	CKD220
	VG150		MOBIL GEAR 629				
	VG100						

十一. Explosion Protection






Explosion protection
according to ATEX 95

JRH industry gear units are certified according to directive 94/9/EC and may be used in hazardous locations.

Surface application:categories 2+3

Description of the surroundings			Assignment of equipment categories to safety requirements		
Explosive atmospheres occurring:	Explosive atmospheres caused by:		Category:	Safety requirements:	Safe if taking into account
The quantification serves for orientation only.	Gases,vapours, mists	Dust			
Continuously,frequently, for more than 1,000 h/yr	Zone 0	Zone 20	Category 1	very high	Rarely occurring disturbances
Occasionally,for a short term, between 10 and 1,000 h/yr	Zone 1	Zone 21	Category 2	high	Normally occurring disturbances
Infrequently,for a short term, less than 10 h/yr	Zone 2	Zone 22	Category 3	normal	Normal operating conditions






十二. Product Accessories

Table of Add-on Pieces

Identific Cation	Add-on Piece	
00	Without add-on piece	
01	Fan	
02	Cooling Coil	
70	Flanged-on pumb	Please refer to JIE.
71	Motor pump	Please refer to JIE.
72	Oil compensating tank	Please refer to JIE.
73	Air-oil Cooler	Please refer to JIE.
74	Water-oil Cooler	Please refer to JIE.
75	Backstop	Please refer to JIE.
76	Heating Elements	Please refer to JIE.
77	Thermometer for Oil Temperature	Please refer to JIE.
78	Grease Seals	Please refer to JIE.
79	Flange for IEC Standard Motor	Please refer to JIE.
80	Torque Arm	Please refer to JIE.
81	Swing-base	Please refer to JIE.
82	Coupling	Please refer to JIE.
83	Fluid Coupling	Please refer to JIE.
84	Motor Bracket	Please refer to JIE.

1)Not for rigid couplings

















JIE INTELLIGENT DRIVE SOLUTIONS CATALOGUE

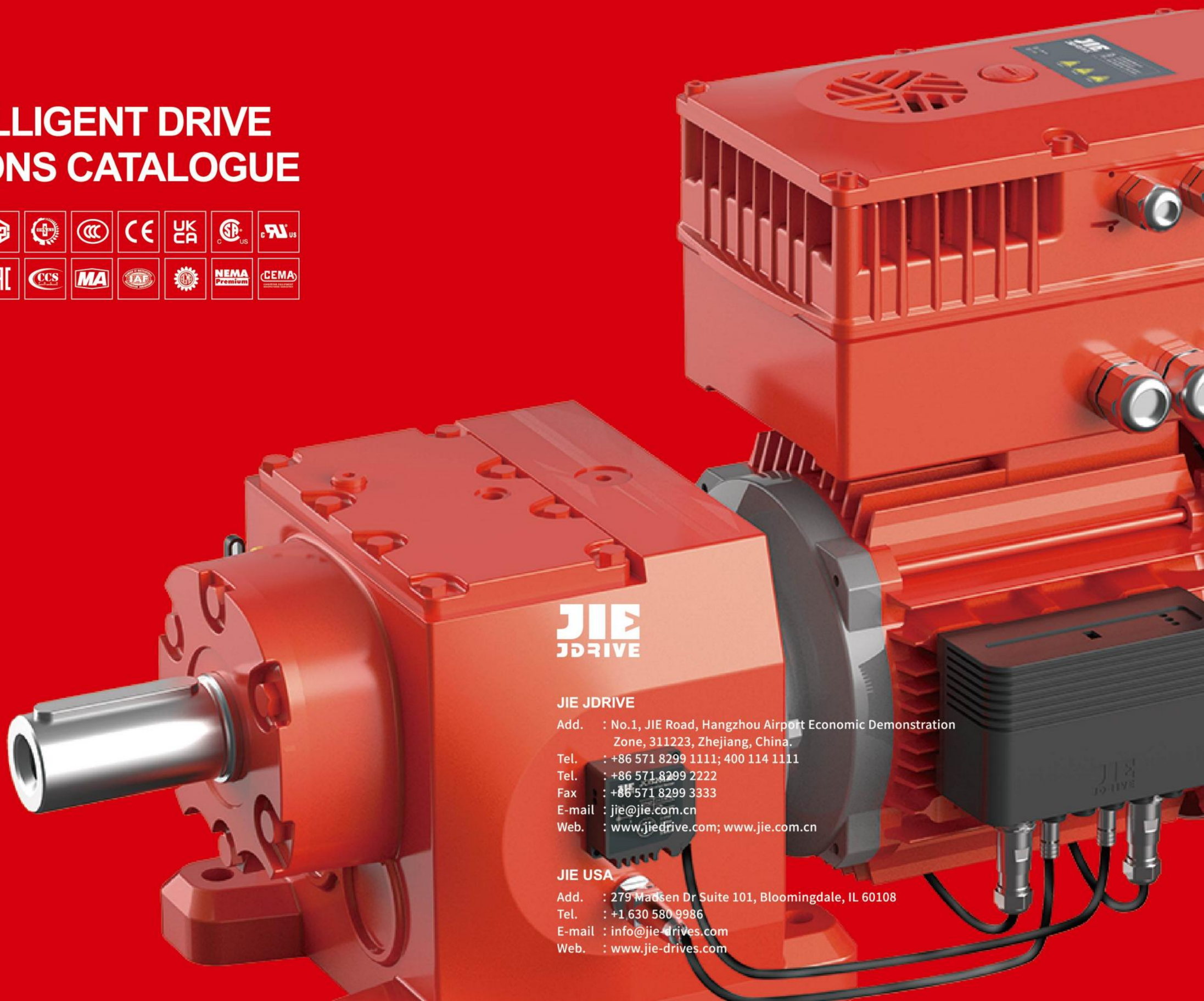

JIE JDRIVE

Add. : No.1, JIE Road, Hangzhou Airport Economic Demonstration Zone, 311223, Zhejiang, China.
Tel. : +86 571 8299 1111; 400 114 1111
Tel. : +86 571 8299 2222
Fax : +86 571 8299 3333
E-mail : jie@jie.com.cn
Web. : www.jiedrive.com; www.jie.com.cn

JIE USA

Add. : 279 Madsen Dr Suite 101, Bloomingdale, IL 60108
Tel. : +1 630 580 9986
E-mail : info@jie-drives.com
Web. : www.jie-drives.com

JRT GEAR UNITS & GEARMOTORS



JRTR
Helical Inline Gearmotors
Size: 09-189
Ratio: 3.37-289.74
Input power: 0.16-340HP
Output torque: 21-499633 lb-in



JRTF
Parallel Shaft Helical Gearmotors
Size: 29-169
Ratio: 3.77-281.71
Input power: 0.16-340HP
Output torque: 31-328333 lb-in



JRTK
Helical-Bevel Gearmotors
Size: 39-189
Ratio: 3.98-197.37
Input power: 0.16-272HP
Output torque: 88-555403 lb-in



JRTS
Helical-Worm Gearmotors
Size: 39-99
Ratio: 3.97-288
Input power: 0.16-30HP
Output torque: 88-43336 lb-in



JRTW
Helical Face Gearmotor
Size: 10-30
Ratio: 6.57-75
Input power: 0.12-1.5HP
Output torque: 221-619 lb-in

JRH INDUSTRIAL GEAR UNITS



JRHH
Parallel Shaft Gear Units
Size: 3-28
Ratio: 1.25-450
Input power: 5.85-14306HP
Output torque: 20341-12381600 lb-in



JRHB
Helical Bevel Gear Units
Size: 4-28
Ratio: 5-400
Input power: 3.81-6677HP
Output torque: 48642-12381600 lb-in



JRHD
Bucket Elevator Gear Units
Size: 5-16
Ratio: 25-71
Input power: 21.8-1775HP
Output torque: 97284-1530012 lb-in



JRHO
Palm Oil Gear Units
Size: 310
Ratio: 56, 80
Input power: 144, 191HP
Output torque: 663300 lb-in



JRHA
Cooling Tower Gear Units
Size: 166
Ratio: 14
Input power: 310HP
Output torque: 185724 lb-in

JRP PLANETARY GEAR UNITS



JRP
Planetary Gear Units
Size: 9-36
Ratio: 25-4000
Input power: 0.54-17597HP
Output torque: 194568-229994400 lb-in



JRP
Planetary Gear Units
Size: 01-8
Ratio: 3.08-3460
Input power: 0.03-261HP
Output torque: 8844-114972 lb-in



JRPH
Rotary Planetary Gear Units
Size: 08-100
Ratio: 3.4-2000
Input power: 102-340HP
Output torque: 70752-884400 lb-in



JRP RV
Inline Planetary Gear Units
Ratio: 3-100
Backlash: 1-3/3-5/5-7arc-min
Torque: 53-29185 lb-in



JRP RE
Right Angle Planetary Gear Units
Ratio: 3-100
Backlash: 4-9/6-11arc-min
Torque: 106-16980 lb-in

JRW WORM GEAR UNITS



JRSTD
IEC Worm Gear Units
Size: 25-150
Ratio: 5-100
Input power: 0.08-20HP
Output torque: 115-13716 lb-in



JRWND
NEMA Worm Gear Units
Size: 30-150
Ratio: 5-100
Input power: 0.08-20HP
Output torque: 115-13716 lb-in



JRWNED
Double Reduction Units
Size: 25/30-63/150
Ratio: 100-5000
Input power: 0.08-2HP
Output torque: 257-23628 lb-in



JRKM, JRKB
Hypoid Gear Units
Size: 28-68
Ratio: 7.5-300
Input power: 0.1-15HP
Output torque: 708-6637 lb-in



WPA
Worm Gears
Size: 40-250
Ratio: 10-60
Input power: 0.16-45HP
Output torque: 168-24292 lb-in

JD THREE PHASE ASYNCHRONOUS MOTORS



JDC, JCS Servo Motors & Drives
Power: 0.54-10HP
Output Torque: 11-425 lb-in
Input power: 1AC 220V/3AC 380V
Communication:
Pulse, EtherCAT, Profinet



JDL
Asynchronous Servo Motor
Torque:: 22-1770N.m
Speed: 1200r/min-3000r/min



JD-IEC
IEC Standard Motors
Size: 63-315
Power: 0.16-272HP
Efficiency: IE3 IE4 IE5



JD-NEMA
NEMA Standard Motors
Size: 56C-365TC
Power: 0.16-30HP
Efficiency: NEMA Premium



JD-B
Explosion-Proof Motors
Size: 80-315
Power: 0.75-272HP
Explosion-Proof Grade:
Exib II BT4
Efficiency: IE3 IE4 IE5

JC INTELLIGENT DRIVE SOLUTIONS



JC
Intelligent Drive Solutions
Industrial Drive Solutions incl Reducers, Motors, Converters, Sensors, Internet of Things, etc.



JCMC VFD Gearmotors
Size: 175-255
Power: 1-7HP
Input Power: 3AC 380-440V
Output Frequency: 0-200Hz
Communication:
ModbusRTU, Profinet, ASi



JCI Intelligent Monitoring System
Power: AC220V, DC24V
Communication: Wifi, 4G, RS485
Items:
Vibration, Temperature, Pressure, Current
Deployment:
Public Cloud, Private Cloud



JCME Distributed VFDS
Size: 175-255
Power: 1-7HP
Input power: 3*AC380-440V
Output Frequency: 0-200Hz
Communication:
Profinet, ModbusRTU, ASi



JCF VFDS
Size: 175-355
Power: 1-74HP
Input power:
1*AC220/3*AC400V
Communication:
Profinet, EtherCAT, CANOPEN

MORE OPTIONS



JRES(R、K)
Stainless Steel Helical Gearmotos
Size: 37-67
Ratio: 3.41-199.81
Input power: 0.24-10HP
Output torque: 106-8048 lb-in



JRES
Stainless Steel Worm Gearmotors
Size: 30-90
Ratio: 7.5-100
Input power: 0.08-5.4HP
Output torque: 23-4053 lb-in



JRTH、JRTV
Front&Rear Roller Gearboxes
Size: 18-60
Ratio: 3-1800
Input power: 0.13-10HP
Output torque: 14-29136 lb-in



JRSS
Screw Lifters
Size: 35-150
Ratio: 5-40
Input power: 0.26-22HP
Lift Capacity: 1102-57431 lb-in



JRTM
Spiral Bevel Right Angle Units
Size: 2-25
Ratio: 1-5
Input power: 0.019-455HP
Input Speed: 10-1450r/min



JRGC
Transfer Case
Size: 0401, 1501
Ratio: 0.589, 0.659, 0.756, 0.825
Max. Output Torque(Pump): 12303 lb-in
Max. Output Torque(Working Shift)
353760 lb-in



JN
Agricultural Machinery Gear Units
Ratio: 0.364-2.33
Input Speed: 800r/min
Efficiency: ≥96%

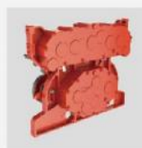

JPF
Front&Rear Roller Gearboxes
Size: 1706-2012
Ratio: 3.04-33.568
Input power: 2-4HP
Output torque: 974-2407 lb-in



JEC
Escalator Units
Size: 2-15, 2-25
Ratio: 24.5
Efficiency: ≥96%
Working Life: 146000h
Output torque: 31219-45547 lb-in

JIE Intelligent Drive Solutions Provider
For more products, please contact JIE.
(Inch)

JIE Drive Intelligent Factory

"12345" Plan of JIE Intelligent Drive Future Factory: 1 Scene, i.e. JIE Intelligent Drive Solutions; 2 Platforms, i.e. Off-line JIE Intelligent Drive Industrial Platform and On-line JIE New Manufacturing Platform; 3 function, i.e. Office Area, Production Area and Living Area; 4 Standards, i.e. Chinese Standard, American Standard, German Standard and Japanese Standard; 5 Intelligence, i.e. Intelligent Plants, Intelligent Products, Intelligent Services, Intelligent Experiences and Intelligent Talents.We are dedicated to build a professional, Intelligent and Global JIE on Environment-friendly, sustainable development, global service basis.

Office Area







Production Area







Living Area



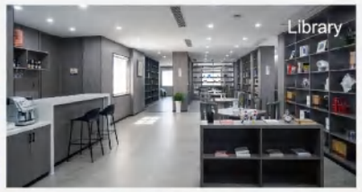

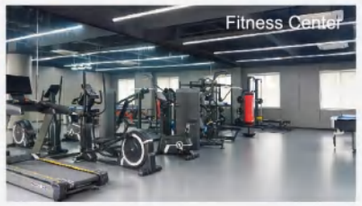

JIE Intelligent Drive Solutions Provider

JRT Intelligent Gearmotors JRH Intelligent Industrial Gear Units JRP Intelligent Planetary Gear Units JRW High-efficiency Worm Reducers JD High-efficiency Motors JC Intelligent Drive Solutions
Intelligent drive solutions such as gear units, gearmotors, motors, VFDs, sensors, and the Internet of Things; and intelligent digital technologies such as execution layer, acquisition layer, drive layer, control layer, and data layer.

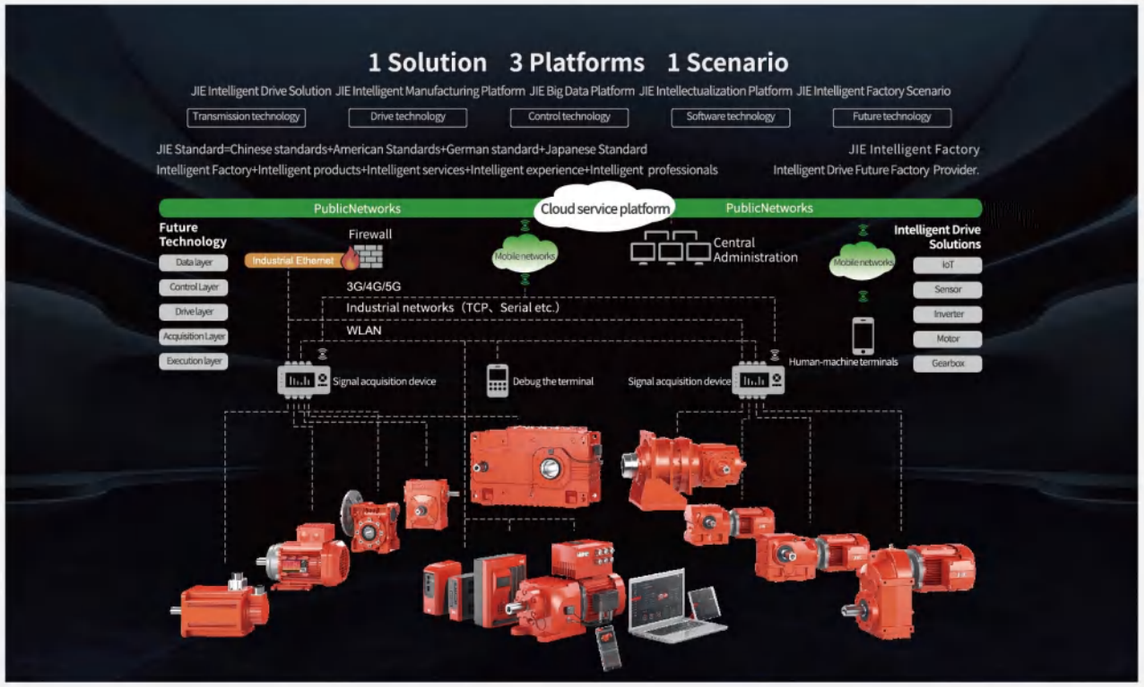

JIE Intelligent Drive Research Institute + Innovation Center + Intelligent Factory

Take the Research Institute as the lead to create talent highland; Take Science & Innovation Park as a platform to build industrial ecology; Based on business entities, positioning "specialized and special new".



JIE Intelligent Drive Products

Standardizing products for platform integration, technologies for automation, and processes for information management.



Intelligent services

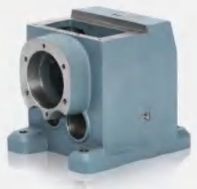

Gear Housings



Gear pairs



Bevel gear pairs



Worm Gear & Shaft



Planetary Gears Inner Rings



Planetary Housings



Motor Stators, Rotors & Housings

JIE Intelligent Drive Applications

Drive solutions include Intelligent Planning Logistics, Smart Housing Plant, Smart Gear Plant, Smart Motor Plant, Smart Assembly Plant, and Intelligent Testing.



Intelligent Drive Solutions for Stackers



Intelligent Drive Solutions for RGVs



Intelligent Drive Solutions for Conveyor Systems



Intelligent Drive Solutions for Elevators



Intelligent Drive Solutions for Cranes



Intelligent Drive Solutions for Industrial Ceiling Fans



Intelligent Drive Solutions for Cleaning Lines



Intelligent Drive Solutions for Heat Treatment Lines



Intelligent Drive Solutions for Motors Winding & Embedding



Intelligent Drive Solutions for Product Assembly Lines

JIE Intelligent Drive Industrial Ecology

Using smart products to build intelligent factories and produce innovative solutions, we provide customers with smart products, services, and experiences. Our goal is to create an industrial platform for win-win cooperation.



JIE Intelligent Drive Projects

JIE provides Intelligent Drive Solutions and Digital Technologies to the top 10 enterprises in manufacturing, clothing, food, housing, automotive, energy, transportation, agriculture, livestock, and maritime industries.



JIE Intelligent Drive solutions for Intelligent Manufacturing Industry



JIE Intelligent Drive solutions for Textiles & Garments Industry



JIE Intelligent Drive solutions for Food & Beverage Industry



JIE Intelligent Drive solutions for Construction Machinery Industry



JIE Intelligent Drive solutions for Automotive Engineering Industry



JIE Intelligent Drive solutions for Power & Energy Industry



JIE Intelligent Drive solutions for Lifting & Transportation Industry



JIE Intelligent Drive solutions for Agricultural Machinery Industry



JIE Intelligent Drive solutions for Petrochemical Industry



JIE Intelligent Drive solutions for Marine Engineering Industry