JRT Gearmotors Selection Manual



JRT Gearmotor

JIE Total Drive Solutions Provider

www.jie-drives.com

JIE JDRIVE

No.1, JIE Road, Hangzhou,
Zhejiang, China
Tel.: +86 571 8299 1111
E-mail: jie@jie.com.cn
Web.: www.jiedrive.com

JIE USA

279 Madsen Drive Ste 101
Bloomingdale IL 60108
Tel.: +1 630 580 9986
E-mail: info@jie-drives.com
Web: www.jie-drives.com

JIE CANADA

130 Rue de l'Émissaire Drummondville,
Québec J2E 1S4 Canada
Tel.: +1 819 850 9886
E-mail: info@jie-drives.com
Web.: www.jie-drives.com

JIE EURONORM

Hub van Doorneweg 8, 2171 KZ
Sassenheim, Netherlands
Tel.: +31 252 228 850
E-mail: info@jie-euronorm.com
Web.: www.jie-euronorm.com

JIEB·04C-01·2024A·0100

JIE INTELLIGENT DRIVE SOLUTIONS PROVIDER








CONTENTS

P5-6	Selection Guide
P7	Product Pictures
P8	Product Description
P9-12	Model Description
P13-23	Selection Description
P24-83	JRTR Helical Inline Gearmotor
P84-131	JRTF Parallel Shaft Helical Gearmotor
P132-191	JRTK Helical Bevel Gearmotor
P192-226	JRTS Helical Worm Gearmotor
P227-250	Design and Assembly Precaution
P251-274	Installation and Mounting Positions
P275-278	Dimensions and Tolerances Precaution

1. Selection Guide

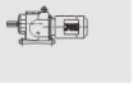
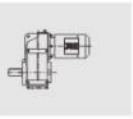
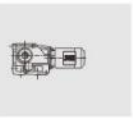
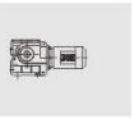

1 **Select JIE Drive product**

Example: Pick the right model, JRTR helical inline gearmotor, JRTF parallel shaft helical gearmotor, JRTK helical bevel gearmotor, JRTS helical worm gearmotor .

2 **Enter current product or brand**

Example: JIE Drive or competitors .

3 **Enter current product specifications**

Example: JRT gearmotor, size 19~189, ratio 1.3 ~289.74, input power 0. 16~300 hp, output torque 610~442300lbf · in and other specifications.

4 **Generate JIE Drive model and specifications**

Example: JRTR69DN100S4-28.83-M1-0°-IS, JRTF69DN90L4-BE-39.26-M1-0°-IS, JRTK69DN90L4-V-38.39-A-M1-0°-IS, JRTS69DN90L4-ES-V-36.85-A-M1-0°-IS and other models.

5 **Generate 2D/3D drawings of JIE Drive products**

Example: 2D/3D drawings of JRTR69DN100S4-28.83-M1-0°-IS, JRTF69DN90L4-BE-39.26-M1-0°-IS, JRTK69DN90L4-V-38.39-A-M1-0°-IS, JRTS69DN90L4-ES-V-36.85-A-M1-0°-IS and other models .

6 **Confirm technical quality standard**

Example: The technical and quality standards shall be implemented according to the relevant standards of JIE Drive and the standards agreed by both parties. The warranty period shall be 12 months after start using products or 18 months after shipment from JIE whichever comes earlier.

7 **Confirm delivery standard**

Example: Delivery shall be made according to the time agreed by both parties for the first cooperation; 7 days lead time base on 1+3 rolling plan, including total usage, annual usage, monthly usage, batch usage and sample; confirmation of pre-sales service, in-sales service, after-sales service and pre-order management.

8 **Confirm the price and payment terms**

Example: The order comes into effective after 30% deposition received and products will be delivered after balance payment; price shall be subject to agreed upon both parties.

9 **Confirm order information**

Example: Confirm product type, model, specification; order quantity, color, packaging, transportation, P.O issue time, delivery time, delivery location, receiving company and other order information.

10 **Confirm product delivery information**

Example: Confirm prototype delivery, small batch delivery, batch delivery and other delivery information.

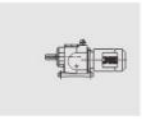
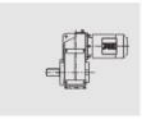



Generate 2D/3D drawing of JIE products

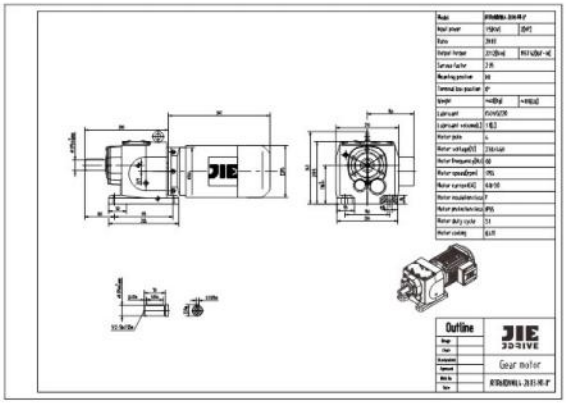

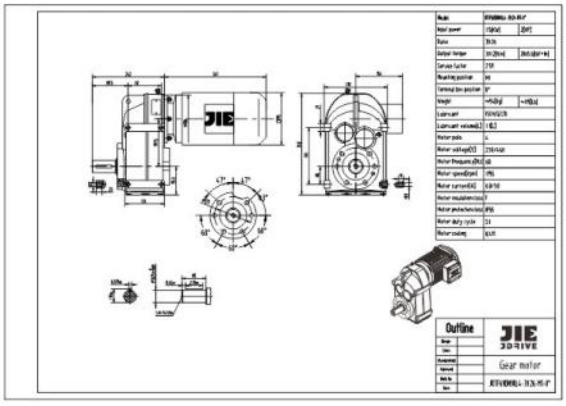

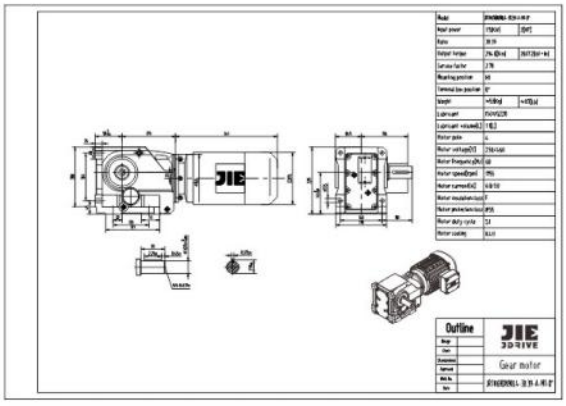

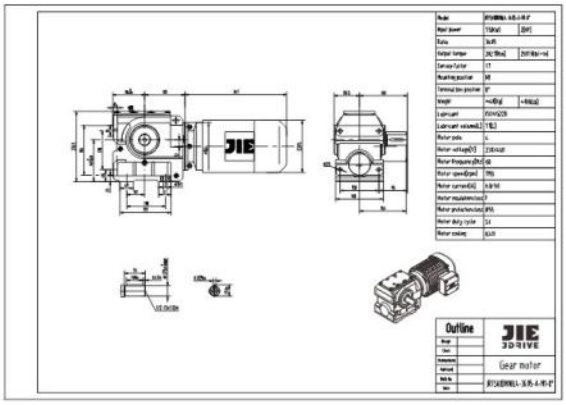

2. Product Pictures











3. Product Description

The JRT gearmotor, with independent intellectual property rights, features an attractive appearance, minimal noise, leakproof oil system, and reliable fast delivery. This catalog includes the JRTR helical inline gearmotor, JRTF parallel shaft helical gearmotor, JRTK helical bevel gearmotor, and JRTS helical worm gearmotor. JRT gearmotors promote lean production processes, implementation of intelligent factories, and integrates research, production, supply, marketing, and service to meet customers' demands.

JRT gearmotors utilize the concept of modular combination and integration of multi-stage gearbox with different types of adapters including various input interfaces, output modules, and installation types. JRT series products are comprised of: a gearmotor, variable-frequency intergal gearmotor, AD-type NEMA motor input interface, solid shaft output module, spline hollow shaft, output module and locking disc output module, flange output module, foot installation, flange installation, torque arm installation or other input interfaces, output modules and various installation positions.

JRT series products are available in standard painting color RAL7031, or a variety of colors/protective coatings and are finished and packaged based on order. Customization is available based on customer requirements. JIE is committed to providing excellent products for partners worldwide as an Intelligent Drive Solutions Provider.

4. Model Description

1. Type of gear motor and gear motor with brake

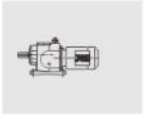
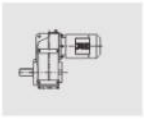
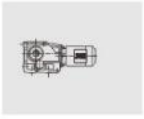


JRTR/F/K/S gear motor

There are the types of helical(R),parallel shaft helical(F),helical-bevel (K) and helical-worm(S)geared motors.We supplied in the table.

Model	(JRTR) Helical	(JRTF) Parallel shaft	(JRTK) Helical bevel	(JRTS) Helical worm
Foot mounted	•	•	•	•
B5 flange mounted	•	•	•	•
Foot/B5 flange mounted	• 2)	•	• 3)	—
Hollow shaft mounted	—	•	• 1)	• 1)
Hollow shaft with shrink disk	—	•	• 1)	• 1)
Splined hollow shaft mounted	—	•	• 1)	—
Hollow shaft with shrink disk+foot mounted	—	•	•	—
Hollow shaft with key+foot mounted	—	•	•	—
Splined hollow shaft mounted+foot mounted	—	•	•	—
Hollow shaft with key+B5 flange mounted (AF)	—	•	•	•
Hollow shaft with shrink disk+B5 flange mounted (HF)	—	•	•	•
Splined hollow shaft mounted+B5 flange mounted (VF)	—	•	•	—
Hollow shaft with key+B14 flange mounted (AZ)	—	•	•	•
Hollow shaft with shrink disk+B14 flange mounted (HZ)	—	•	•	•
Splined hollow shaft mounted+B14 flange mounted (VZ)	—	•	•	—

• Standard
— Not applicable
1) The torque arm can be used
2) Only available for JRTR19-R89
3) Only available for JRTK129-K159

Multi-stage gear motor

Using a multi-stage gearmotor, a particular low output speed can be achieved. By mounting a helical gear motor as a second gearmotor on the input end. Note that thiswill restrict the motor power accordingly from the maximum permitted output torque.

Brake motors

On demand, the motor can be supplied with an intergrated mechanical brake.
The JIE brake is an electromagnetic disc brake with a DC coil. It is released electrically and the brake is applied using spring force. The brake is designed where the brake will be applied if the power fails. This is in compliance with fundamental safety requirements. The JIE brake can also be released mechanically if fitted with a manual brake release. Either a hand lever or setscrew will be supplied with the brake. The hand lever will spring back automatically and the setscrew can be locked in place. The brake is activated by a control system which is located in the wiring switch cabinet.









2. Unit designations for gear motor and options

JRTR Helical gear motor

JRTR..	Foot-mounted
JRTRF..	Flange-mounted
JRTR..F	Foot and flange-mounted
JRTRX..	Single-stage foot-mounted
JRTRXF..	Single-stage flange-mounted

JRTF Parallel shaft helical gear motor

JRTF..	Foot mounted
JRTFA..B	Foot mounted with hollow shaft
JRTFH..B	Foot mounted with hollow shaft and shrink disc
JRTFV..B	Foot mounted with hollow shaft and splined hollow shaft
JRTFF..	B5 flange mounted
JRTFAF..	B5 flange mounted with hollow shaft
JRTFHF..	B5 flange mounted with hollow shaft and shrink disc
JRTFVF..	B5 flange mounted with spined hollow shaft disc
JRTFAZ..	B14 flange mounted with hollow shaft
JRTFHZ..	B14 flange mounted with hollow shrink disc
JRTFVZ..	B14 flange mounted with Splined hollow shaft
JRTFA..G	Torque mounted with hollow shaft
JRTFH..G	Torque mounted with hollow shrink disc

JRTK Helical-bevel gear motor



JRTK..	Foot mounted
JRTKA..B	Foot mounted with hollow shaft
JRTKH..B	Foot mounted with hollow shaft and shrink disc
JRTKV..B	Foot mounted with hollow shaft and splined hollow shaft
JRTKF..	B5 flange mounted
JRTKAF..	B5 flange mounted with hollow shaft
JRTKHF..	B5 flange mounted with hollow shaft and shrink disc
JRTKVF..	B5 flange mounted with spined hollow shaft disc
JRTKA..	Hollow shaft mounted
JRTKH..	Hollow shaft with shrink disc
JRTKV..	Splined hollow shaft mounted
JRTKAZ..	B14 flange mounted with hollow shaft
JRTKHZ.	B14 flange mounted with hollow shrink disc
JRTKVZ..	B14 flange mounted with Splined hollow shaft disc
JRTKA..T	Torque mounted with hollow shrink disc
JRTKH、、T	Torque mounted with hollow shrink disc

JRTS Helical-worm gear motor

JRTS..	Foot-mouted
JRTSF..	B5 flange-mounted
JRTSAF..	B5 flange-mounted and hollow shaft
JRTSHF..	B5 flange-mounted and hollow shaft with shrink disc
JRTSA..	Hollow shaft
JRTSH..	Hollow shaft with shrink disk
JRTSAZ..	B14 flange-mounted and hollow shaft
JRTSHZ..	B14 flange-mounted and hollow shaft with shrink disc
JRTSA..T	Torque mounted with hollow shaft
JRTSH..T	Torque mounted with hollow shrink disc






3. The name of AC motors and its accessory

Motor options

BE	Brake
HF	with lockable manual brake release
HR	with automatic manual brake disengaging
RS	Backstop
TF	Thermistor sensor (PTC resistance)
TH	Thermostat (bimetallic switch)
U	Non-ventilated
V	Forced cooling fan
Z	Additional flywheel mass
C	Rain cover
STH	Electric Heating
2WE	Rear shaft of the motor
RI	Reinforced insulation
DH	Condensation drain holes
YB	Flame-Proof with three-phese asychronous motor
YGP	Roller with three-phese asychronous motor
YZP	Metallvrgy overweight with three-phese asychronous motor
JD...V	Three phese asychronous motor asynchronous motor with frequency
YD	Pole-Changing three-phese asychronous motor

Encoder options

AV1Y	Absolute encoder with solid shaft .MSI and Sin/cos signals and $24V_{DC}$ supply
	Encoder. TTL(RS-422) signals and $5V_{DC}$ supply
E	Encoder. signals and $24V_{DC}$ supply
	Encoder. TTL(RS-422) signals and $24V_{DC}$ supply
	Encoder . HTL

5. Selection Description

1. JRT Gearmotor Data






The below data is critical for the proper selection of the gearmotor

Drive selection data			
n_{amin}	Minimum output speed	[r/min]	
n_{amax}	Maximum output speed	[r/min]	
P_a at n_{amin}	Output power at minimum output speed	[kW]	
P_a at n_{amax}	Output power at maximum output speed	[kW]	
M_a at n_{amin}	Output torque at minimum output speed	[Nm]	
M_a at n_{amax}	Output torque at maximum output speed	[Nm]	
F_R	Overhung load on output shaft. Assumed force application i-s in the center of shaft end. If not, please specify the exact application point indicating the application angle and directi -on of rotation of the shaft for a check calculation.	[N]	
F_A	Axial load (tension and compression) on output shaft	[N]	
J_{load}	Mass moment of inertia to be driven	[10^{-4}kg□m^2]	
JRTR/F/K/S M1-M6	Required gear motor type and mounting position	–	
IP..	Required protection against dust and water	–	
ϑ_{env}	Ambient temperature	[C]	
H	Altitude	[m above sea level]	
S.., ..%Cdf	Operating mode and intermittency factor cdf; alternatively,exact load cycle can be specified	–	
Z	Starting frequency;alternatively,exact load cycle can be specified	[per h]	
f_{mains}	Supply frequency	[Hz]	
V_{mot} V_{brake}	Operating voltage of motor and brake	[V]	
M_B	Required braking torque	[Nm]	






2. JIE Gearmotor Efficiency

JRT gear motor

The efficiency of the gear motor is mainly determined by the gearing ,m sh and bearing friction. Please note that the starting efficiency of a gear motor is always less than its efficiency at operating speed .This fact is especially obvious in helical-worm right-angle geared motors

JRTR.JRTF.JRTK gear motor

The efficiency of helical,parallel shaft and helical-bevel gear motor varies according to the number of gear stages,between 94%(3-stage)and 98%(1-stage).

JRTS gear motor

The gearing in helical-worm and gear motor produces a high proportion of sliding friction. As a result, these gear motors may have higher gearing losses than R, F or K gear motor, and thus be less efficient. The cause of factors are:

- Gear ratio of the helical-worm
- Input speed
- Gear motor temperature

JIE gear motor are designed as helical worm which makes them significantly more efficient thanstandard worm gear motor s The efficiency may reach $\eta<0.5$ if the helical-worm stage has a very high ratio step.

Running in-phase

For a helical-worm and gear motor, the gear teeth flanks will initially not be completely smooth. With a greater friction angle, the inital efficiency will be less than later operations. This will become more apparent in the improved ratio as well.

During inital operation, the following efficiency figures excluding the 4start are as follows.

	Helical-worm	i range
1start	approx.12%	approx.50-280
2start	approx.6%	approx.20-75
3start	approx.3%	approx.20-90
4start	-	-
5start	approx.3%	approx.6-25
6start	approx.2%	approx.7-25

The running-in phase normally lasts 24 hours.Helical-worm gear motor achieve their listed rated efficiency values when the gearbox:

- has been run in completely
- has reached normal operation temperature
- the recommended lubricant has been filled in working within the rated load range

FORMAT "Churning losses"

In certain gear motor mounting positions the first reduction stage is completely immersed in the lubricant. For larger gear motor sizes and high circumferential velocities of the input stage, this gives rise to churning losses constituting a factor which cannot be ignored. Please contact JIE if you wish to use gear motor of this type.
If possible, use the mounting position M1 for R, K and S gear motor in order to keep the churning losses low.

3. Service factor

Service factor (I)

Determining the service factor

Gear motor selection needs to consider a certain factor which is called the service factor f_B .The service factor is determined by the daily operating time and the starting frequency. Three load classifications are also considered which depend on the mass acceleration factor. You can read the different service factor from the figure as follows. The service factor determined using this diagram must be smaller than or equal to the JIE service factor as given in the selection tables.

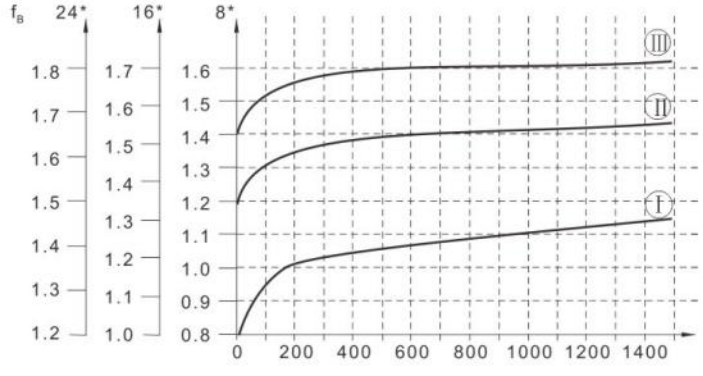

Fig:Service factor f_B

* Daily operating time in hours/day

** Starting frequency Z: The cycles include all starting and braking procedures as well as changes from low to high and high to low speed.

Load classification

Three load classifications are differentiated:

Uniform, with mass acceleration factor≤0.2

Moderate shock load, with mass acceleration factor≤3

Severe shock load, with mass acceleration factor≤10

Mass acceleration factor

The mass acceleration factor is calculated as follows:

$$\text{Mass acceleration factor} = \frac{\text{All external mass moments of inertia}}{\text{Inertia of the motor}}$$

"All external mass moments of inertia" are the mass moments of inertia of the driven machine and the gear motor,scaled down to the motor speed. The calculation for scaling down to the motor speed performed using the following formula: $J_X = j \cdot \left(\frac{n}{n_M}\right)^2$

J_x=Reduced mass moment of inertia on the motor shaft

J =Mass moment of inertia referenced to the output speed of the gear motor

n =Output speed of the gear motor

n_M=Motor speed

"Mass moment of inertia on the motor if it equips the brake and the flywheel fan(Z fan), the components' mass moment of inertia should be increased at the same time.

Service factors f_B>1.8 may occur with large mass acceleration factors(>10),high levels of play in the transmission elements or large overhung loads.Please contact JIE in this case.

JIE service factor: JIE f_B

The method for determining the maximum approved continuous torque Maxax and then deriving the service factor $f_B=M_{amax}/M_a$ is not de fined in a standard and varies greatly from manufacturer to manufacturer.With their JIE service factor $f_B=1$,JIE drives afford an extremely high level of safety and reliability in the fatigue strength range(exception: wearing of the worm wheel in helicalworm gear units).Under a certain circumstances,the JIE service factor may not be comparable to the information given details for your specific drive . If there are any questions, please contact JIE to get the special drive equipments' document in detail.

Example

Mass acceleration factor 2.5 (load classification Ⅱ),14 hours/day operating time (check the figure at 16h/d) and 300 cycles/hour produce a service factor $f_B=1.51$ as shown in Fig.2. According to the selection table, the selected geared motor must have an JIE f_B value of 1.51 or greater.

Helical-worm gear motor

Two further service factors have to be taken into account with helical-worm gear motors in addition to the service factor f_B shown in Fig.2. These are:

f_{B1}= Service factor for the ambient temperature

f_{B2}= Service factor for the cyclic duration factor

Additional service factors f_{B1} and f_{B2} can be determined by diagrams in Fig.4.
For the f_{B1} factor, we can define it just in the same way as f_B.

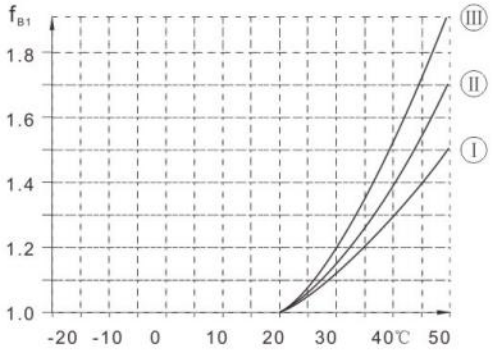

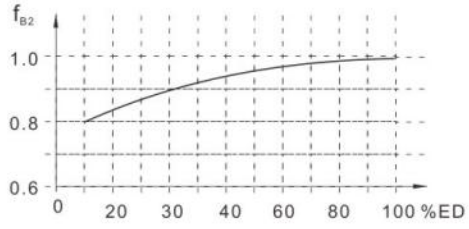

Additional service factors f_{B1} and f_{B2}

$$cdf(\%)=\frac{\text{Time under load in min/h}}{60}\ 100$$

Please contact JIE in case of temperatures below -20℃ ($\rightarrow f_{B1}$).
The total service factor for helical-worm gear units is calculated as follows:

$$F_{Btot}=f_B \cdot f_{B1} \cdot f_{B2}$$

Example

If the geared motor with the service factor $f_B=1.51$ in the previous example is a helical–worm gear motor.
Ambient temperature υ =40℃ ← f_{B1}=1.38(read off at load classification II)
Time under load =40min/h ← cdf=66.7% ← f_{B2}=0.95 The total service factor is

$$F_{Btot}=1.51 \cdot 1.38 \cdot 0.95=1.98$$

According to the selection tables,the selected helical-worm geared motor must have a JIE f_B value of 1.98 or greater.

Service factor(II)

Gear motors are designed under the circumstances of steady load, stated operating time per day and a few sarting times. But the practical condition will be not as perfect as the designed circumstances. So we must confirm driven machine factor f_{B1}, prime mover factor f_{B2}, starting factor f_{B3} according to actual load type, operating time, starting frequency. Let it less than or equale to the service factor f_B of selection table, viz $f_{B1} \times f_{B2} \times f_{B3} \leqslant f_B$. The needed torque of service machine multiply the service factor ($f_{B1} \times f_{B2} \times f_{B3}$) should less than or equale to gear motor permissible torque.

$M_a \geqslant M_d \times f_{B1} \times f_{B2} \times f_{B3}$

f_{B1}-driven machine factor(see table 1)

f_{B2}-prime mover factor (see table 2)

f_{B3}-starting factor(see table 3)

M_d-the needed torque of driven machine

M_a-gear motor permissible torque

Table 1 Factor for driven machine		f_{B1}		
Driven machines		The day work hours		
		≤0.5h	0.5-10h	>10h
Waste water treatment	Thickeners (central drive)	-	-	1.2
	Fitter presses	1.0	1.3	1.5
	Flocculation apparata	0.8	1.0	1.3
	Aerators	-	1.8	2.0
	Raking equipment	1.0	1.2	1.3
	Combined longitudinal and rotary rakes	1.0	1.3	1.5
	Pre-thickeners	-	1.1	1.3
	Screw pumps	-	1.3	1.5
	Water turbines	-	-	2.0
	Centrifugal pumps	1.0	1.2	1.3
	1 piston positive-displacement pumps	1.3	1.4	1.8
	> 1 piston positive displacement pumps	1.2	1.4	1.5
Dredgers	Bucker conveyors	-	1.6	1.6
	Dumping devices	-	1.3	1.5
	Carterpillar travelling gears	1.2	1.6	1.8
	Bucket wheel excavators as pick-up	-	1.7	1.7
	Bucket wheel excavators for primitive material	-	2.2	2.2
	Cutter heads	-	2.2	2.2
	Traversing gears*		1.4	1.8
	Plate bending machines	-	1.0	1.0
Chemical industry	Extnuders	-	-	1.6
	Dough mills	-	1.8	1.8
	Rubber calenders	-	1.5	1.5
	Cooling drums	-	1.3	1.4
	Mixers for uniform media	1.0	1.3	1.4
	Mixers for non-uniform media	1.4	1.6	1.7
	Agitators for media with uniform density	1.0	1.3	1.5
	Agitators for media with non uniform density	1.2	1.4	1.6
	Agitators for media with non uniform gas absorption	1.4	1.6	1.8
	Toasters	1.0	1.3	1.5
	Centrifuges	1.0	1.2	1.3
Cranes	Slewing gears	2.5	2.5	3.0
	Luffing gears	2.5	2.5	3.0
	Travelling gears	2.5	3.0	3.0
	Hoisting gears	2.5	2.5	3.0
	Derricking jib cranes	2.5	2.5	3.0






Driven machines		The day work hours		
		≤0.5h	0.5-10h	>10h
Metal working mills	Plate titers	1.0	1.0	1.2
	Ingot pushers	1.0	1.2	1.2
	Winding machines	-	1.6	1.6
	Cooling bed transfer frames	-	1.5	1.5
	Roller straighteners	-	1.6	1.6
	Roller tables continuous	-	1.5	1.5
	Roller tables intermittent	-	2.0	2.0
	Roller tables Reversing tube mills	-	1.8	1.8
	Shears continuous*	-	1.5	1.5
	Shears crank type*	1.0	1.0	1.0
	Continuous casting drivers	-	1.4	1.4
	Reversing blooming mills	-	2.5	2.5
	Reversing slabbing mills	-	2.5	2.5
	Reversing wire mills	-	1.8	1.8
	Reversing sheet mills	-	2.0	2.0
	Reversing plate mills	-	1.8	1.8
	Roll adjustment drives	0.9	1.0	-
Conveyors	Bucket conveyors	-	1.2	1.5
	Hauling winches	1.4	1.6	1.6
	Hoists		1.5	1.8
	Belt conveyors<150kw	1.0	1.2	1.3
	Belt conveyors≥150kw	1.1	1.3	1.5
	Goods lifts*	-	1.2	1.5
	Passenger lifts*		1.5	1.8
	Apron conveyors	-	1.2	1.5
	Escalators		1.2	1.4
	Rail travelling gears	-	1.5	-
	Frequency converters	-	1.8	2.0
	Reciprocating compressors	-	1.8	1.9
Cooling towers	Cooling tower fans	-	-	2.0
	Blowers(axial and radial)	-	1.4	1.5
Cane sugar production	Cane knives*	-	-	1.7
	Cane mills	-	-	1.7
Beet sugar production	Beet cossettes macerators	-	-	1.2
	Extraction plants, Mechanical refrigerators, Juice boilers	-	-	1.4
	Sugar beet washing machines	-	-	1.5
	Sugar beet cutters	-	-	1.5
Paper machines	Of all-kind**	-	1.8	2.0
	Pulper drives	2.0	2.0	2.0
	Centrifugal compressors	-	1.4	1.5
Cableways	Material ropeways	-	1.3	1.4
	To-and fro system aerial ropeways	-	1.6	1.8
	T-barlifts	-	1.3	1.4
	Continuous ropeways	-	1.4	1.6
Cement industry	Concrete mixers	-	1.5	1.5
	Breakers*	-	1.2	1.4
	Rotary kilns	-	-	2.0
	Tube mills	-	-	2.0
	Separators	-	1.6	1.6
	Roll crushers	-	-	2.0

Table 2 Factor for prime mover	f_{B2}
Electric motos, hydraulic motors, turbines	1.0
Piston engines 4-6 cylinders	1.25
Piston engines 1-3 cylinders	1.5

Table 3 Start factor	f_{B3}
Number of starts and stop/hour	
<10	1
$10<f_{B3}<100$	1.15
$100<f_{B3}<500$	1.25

4. Overhung and axial loads






Determining overhung load

When determining the overhung load, the type of transmission element mounted onthe shaft end must be considered. The transmission element factors f_z are listed as follows.

Transmission element	Transmission element factor fz	Comments
Gears	1.15	>17teeth
Chain sprockets	1.40	>13teeth
Chain sprockets	1.25	>20teeth
Narrow V-belt pulleys	1.75	Pre-tensioning influence
Flat belt pulleys	2.50	Pre-tensioning influence
Toothed belt pulleys	2.5	Pre-tensioning influence

The overhung load exerted on the motor or gear shaft is then calculated as follows:

$$F_R = \frac{M_d \cdot 2000}{d_o} \cdot f_z$$

F_R	Overhung load in N	d_o	Pitch diameter
M_d	Torque ın Nm	f_z	Transmission element factor

Permitted overhung load

According to the defined service life L_{H10} of the bearings permit certain overhung loads. For the special operating conditions, the permitted overhung loads can be determined by the modified service life L_{na} .

The permitted overhung loads F_{Ra} for the output shafts of foot-mounted gear units with a solid shaft are listed in the selection tables for geared motors.Please contact JIE in case of other types.

The data refer to the radial force applied in the middle on the shaft end (with right-angle gear units on the A-side output).Worst case conditions have been assumed for the force application angle α and the direction of rotation.

- Only 50% of the FRa value specified in the selection tables is permitted in mounting position M1 with wall attachment on the front face for K and S gear units.
- Helical-bevel geared motors K169 and K189 in mounting positions M1 to M4:If the mounting position is different from the position we offered (M1-M4), the overhung load FRa lasted in the selection tables.
- Foot and flange-mounted helical geared motors(R..F):A maximum of 50% of the overhung load FRa specified in the selection tables in the case of torque transmission via the flange mounting. when the torque transmission via the flange mounting the overhung load FRa will only be 50% compared with the FRa lasted the selection tables.

Higher appproved overhung loads

It possible to achieve a higher overhung load by Precisely considering the force application angle α and the direction of rotation.In addition,higher output shaft loads ar e permitted if heavy duty bearings are installed,especially with R,Fand K gear units.Please contact JIE in this case.

Definition of force application

Force application is defined according to the following diagram:

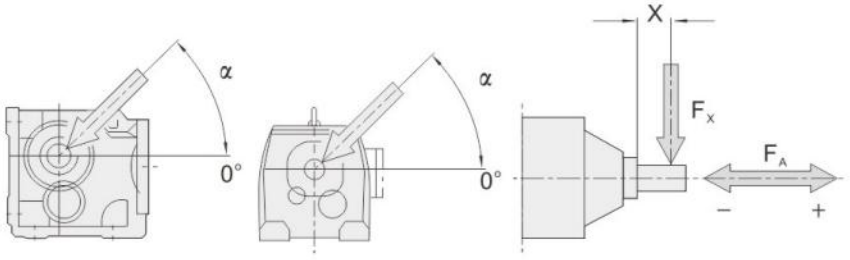

Fig:Definition of force application

F_X = Approved overhung load at point X [N]

F_A = Approved axial load [N]

Approved axial loads

If there is no overhung load,then an axial load FA(tension or compression) of 50% of the overhung load given in the sele ction tables is approved.This applies to the following geared motors:

- Helical geared motors except for R..139...to R..169...
- Parallel shaft and helical-bevel geared motors with solid shaft except for F99...
- Helical-worm geared motors with solid shaft

Please contact JIE for all other types of gear units and in the event of significantly greater axial loads or combinations of overhung load and axial load.

Overhung load conversion for off-center force application

The approved overhung loads given in the selection tables must be calculated using the follo -wing formulae in the event of force application not in the center of the shaft end. The smaller of the two values F_{XL} (according to bearing service life) and F_{XW} (according to shaft strength)is the approved value for the overhung load at point x. Note that the calculations apply to $M_{a\,max}$.

F_{XL} acc.to bearing service life $F_{XL} = F_{ra} \cdot \frac{a}{b+x}$ [N]

F_{XW} from the shaft strength $F_{XW} = \frac{c}{f+x}$ [N]

F_{Ra} = Approved overhung load(x=1/2) for foot-mounted gear units according to the selection tables in [N]

X = Distance from the shaft shoulder to the force application point in [mm]

a,b,f = Gear unit constants for overhung load conversion [mm]

c = Gear unit constant for overhung load conversion [Nmm]

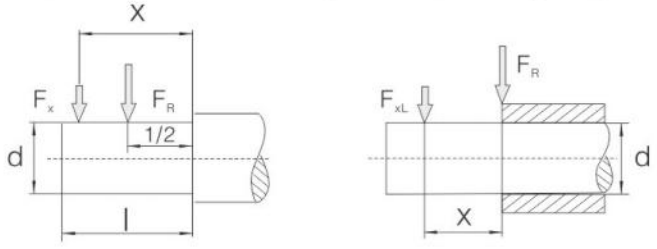

Fig:Overhung load Fx for off-center force application

Gear unit constants for overhung load conversion

Gear unit type	a [mm]	b [mm]	c [Nmm]	f [mm]	d [mm]	l [mm]
JRTR19	88.5	68.5	6.527×10^4	17	20	40
JRTR29	106.5	81.5	1.56×10^5	11.8	25	50
JRTR39	118	93	1.24×10^5	0	25	50
JRTR49	137	107	2.44×10^5	15	20	60
JRTR59	147.5	112.5	3.77×10^5	18	35	70
JRTR69	168.5	133.5	2.51×10^5	0	35	70
JRTR79	173.7	133.7	3.97×10^5	0	40	80
JRTR89	216.7	166.7	8.47×10^5	0	50	100
JRTR99	255.5	195.5	1.19×10^6	0	60	120
JRTR109	285.5	215.5	2.06×10^6	0	70	140
JRTR139	343.5	258.5	6.14×10^6	30	90	170
JRTR149	402	297	8.65×10^6	33	110	210
JRTR169	450	345	1.26×10^7	0	120	210
JRTRX59	43.5	23.5	1.51×10^5	34.2	20	40
JRTRX69	52.5	27.5	2.42×10^5	39.7	25	50
JRTRX79	60.5	30.5	1.95×10^5	0	30	60
JRTRX89	73.5	33.5	7.69×10^5	48.9	40	80
JRTRX99	86.5	36.5	1.43×10^6	53.9	50	100
JRTRX109	102.5	42.5	2.47×10^6	62.3	60	120
JRTF39	123.5	98.5	1.07×10^5	0	25	50
JRTF49	153.5	123.5	1.78×10^5	0	30	60
JRTF59	170.7	135.7	5.49×10^5	32	35	70
JRTF69	181.3	141.3	4.12×10^5	0	40	80
JRTF79	215.8	165.8	7.87×10^5	0	50	100
JRTF89	263	203	1.19×10^6	0	60	120
JRTF99	350	280	2.09×10^6	0	70	140
JRTF109	373.5	288.5	4.23×10^6	0	90	170
JRTF129	442.5	337.5	9.49×10^6	0	110	210
JRTF159	512	407	1.05×10^7	0	120	210
JRTK39	123.5	98.5	1.41×10^5	0	160	250
JRTK49	153.5	123.5	1.78×10^5	0	25	50
JRTK59	169.7	134.7	6.8×10^5	31	30	60
JRTK69	181.3	141.3	4.12×10^5	0	35	70
JRTK79	215.8	165.8	7.69×10^5	0	40	80
JRTK89	252	192	1.64×10^6	0	50	100
JRTK99	319	249	2.8×10^6	0	60	120
JRTK109	373.5	288.5	5.53×10^6	0	70	140
JRTK129	443.5	338.5	8.31×10^6	0	90	170
JRTK159	509	404	1.18×10^7	0	110	210
JRTK169	621.5	496.5	1.88×10^7	0	120	210
JRTK189	720.5	560.5	3.04×10^7	0	160	250
JRTS39	118.5	98.5	6.0×10^4	0	190	320
JRTS49	130	105	1.33×10^5	0	20	40
JRTS59	150	120	2.14×10^5	0	25	50
JRTS69	184	149	3.04×10^5	0	30	60
JRTS79	224	179	5.26×10^5	0	35	70
JRTS89	281.5	221.5	1.68×10^6	0	45	90
JRTS99	326.3	256.3	2.54×10^6	0	60	120
					70	140

Values for types not listed are available on request.

5. Selection Table of JIE JRT Products






Application:

Application industry: Equipment name:

Ambient temperature: Ambient humidity:

Altitude: Site of use: ☐indoor ☐outdoor

Start-stop frequency: Running time:

Load time: ☐15% ☐25% ☐40% ☐60% ☐100%

Current brand: Current model:

Existing problem: Items needing improvement:

Product information:

Packaging:

Packaging material: ☐Carton ☐Wooden case ☐Carton + Wooden case Case mark: ☐English

Relevant data: ☐Certificate of conformity ☐Ex-factory inspection report ☐English manual

List of accessories: ☐Torque arm ☐Backstop ☐Hollow shaft encoder ES ☐Solid shaft encoder EV
☐ Thermistor TF ☐Thermal protection switch TH ☐Platinum thermal resistance Pt100
☐Rain cover C ☐Electric heating tape STH ☐None

Appearance:

Paint color: JMR-01 ☐JMG-01 ☐JGB-01 ☐RAL2002 ☐RAL5015 ☐RAL9003 ☐RAL7045 ☐RAL7031

Nameplate requirement: ☐English Anti-corrosive grade: ☐Standard ☐JS1 ☐JS2 ☐JS3 ☐JS4

Installation:

Product model: JRTR☐ JRTF☐ JRTK☐ JRTS☐

Type of installation: ☐Foot installation ☐Flange installation ☐Foot flange installation

Mount position: ☐M1 ☐M2 ☐M3 ☐M4 ☐M5 ☐M6(see attached figure)

Output module: ☐Solid shaft ☐Hollow shaft with single key ☐Shrink disc ☐Hollow shaft with spline

Output shaft direction: ☐A ☐B ☐AB Output shaft rotation: Clockwise ☐Counterclockwise ☐Two-direction

Input module: ☐Standard motor ☐AD adaptor ☐AM adaptor ☐AN adaptor ☐AQS adaptor
☐Without motor-with motor gear

Terminal box angle: ☐0° ☐90° ☐180° ☐270°(see attached figure)

Cable entry: ☐N ☐1 ☐2 ☐3 (see attached figure)

Performance:

Transmission ratio: i= Output torque: Service factor:

Type of motor: ☐Standard motor ☐Frequency conversion motor ☐Explosion-proof motor ☐Roller motor
☐Lifting motor ☐Servo motor

Rated power: kW Pole number: ☐2 ☐4 ☐6 ☐8

Rated voltage: ☐230/460V Motor frequency: ☐60Hz

Insulation grade: ☐F ☐H Protection grade: ☐IP54 ☐IP55 ☐IP56

Working system: ☐S1 ☐S3-40% Cooling mode: ☐IC410 ☐IC411 ☐IC416

Energy efficiency class: ☐ IE3 ☐ IE4

Fan voltage: ☐DC 24V ☐AC 230V (1～) ☐AC 460V (3～)

Fan frequency: ☐60Hz

Brake voltage: ☐DC 24V ☐AC 230V ☐AC 460V

Release device: ☐ Handle release HR ☐ Screw release HF ☐ None Brake response: ☐ Ordinary ☐ Fast

Angle between release device and terminal box (clockwise from the end of shaft extension) :

☐0°☐90°☐180°☐270° (see attached figure)

Product model:

Customized information:

Packaging:

Appearance:

Installation dimension:

Performance indicators:

After-sales service:

Service information:

Pre-sales service:

Training consulting: ☐ Type selection training ☐ Application training ☐ Use and maintenance

Design selection: ☐ Participate in design ☐ Design verification ☐ Product selection

Demand confirmation: ☐ Working condition confirmation ☐ Product confirmation ☐ Service confirmation

In-sales service: ☐ On-site full inspection ☐ Process sampling ☐ Ex-factory inspection

After-sales service: ☐ Installation and commissioning☐ Testing and maintenance ☐ Spare parts

Business information:

Transportation:

Delivery place:

Delivery time:

Order quantity:

Price and payment terms:

Attached figure:

Mount position:

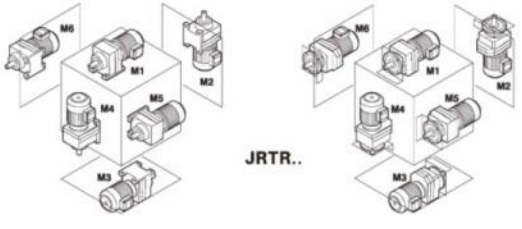

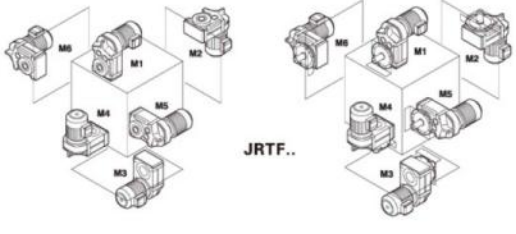

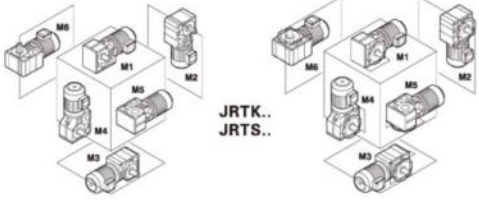

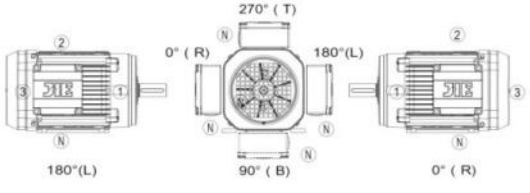



6. JRTR Helical Inline Gearmotor

1. Versions of gearmotor

The following types of helical-bevel motor can be supplied:

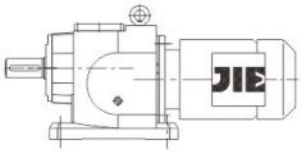

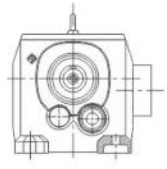

JRTR..D..
Foot-mounted

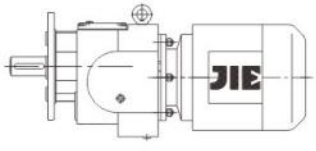

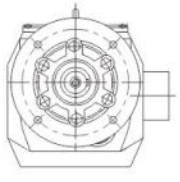

JRTRF..D..
Flange-mounted

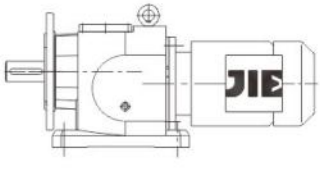

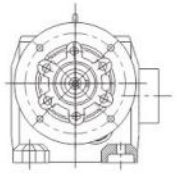

JRTR..F D..
Foot and Flange-mounted

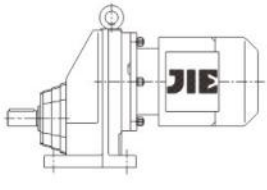

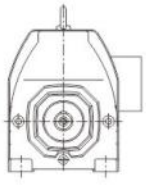

JRTRX..D..
Single-stage Foot-mounted

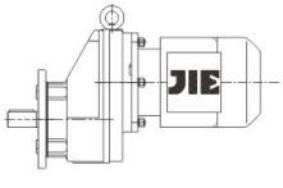



JRTRXF..D..
Single-stage Flange-mounted

2. JRTR Helical Inline Gearmotor Nomenclature



J	RTR	F	69	II	DN	80	M	4	–	BE	–	HF	–	TF	–	128.97	–	M1	–	180°	–	IS
1	2	3	4	5	6	7	8	9		10		11		12		13		14		15		16

1 Enterprise Code

J- JIE Drive

2 Product Code

RTR- Helical Geared Motor

3 Installation type

No Code- Foot-mounted
F- Flange-mounted
F- Foot and Flange-mounted
X- Single-stage Feet-mounted
XF- Single-stage Flange-mou-nted

4 Gear Unit Size

69- Gearmotor Size 69

5 Flange Size

I – No Code–No Flange or Only One Flange or The Sm-allest Flange
II – Second Bigger Flange
III – Biggest Flange

6 Electric Motor

D– Three Phase Asychronous Motor(IP 54)
DU/DN– Energy efficiency rating class 2/class 3
YB–Flame–proof Three Phase Asychronous Motor
YGP–Table Roller Three Phase Asychronous Motor
YZP– Metallurgy Hoist Froquency Variable Motor
YD– Multi Speed Three Phase Motor

7 Frame Size

80– Motor Center Height 80mm

8 Stator Length

S、M、L

9 Number of Poles

4- 4 Poles

10 Brake

No Code-No Brakes
BE - Brakes

11 Brake Release

No Code- No brake release
HF- Screw release(lock in the brake release position)
Brake release
HR-Handle release(automatic braking position)

12 Thermal Protection

No Code-No Thermistor
TF- Thermistor Sensor
TF- Thermistor protection (PTC thermistor)
TH- Thermostat protection (Bimetal switch)

13 Ratio

128.97-Ratio 128.97

14 Mounting Position

M1- Mounting Position M1

15 Terminal Box Position

No Code- Terminal Box Position is 0°
180° -Terminal Box Position is 180°

16 16 Inch Symbol

IS-Inch size



3. Type of Combination

Ratio chart indexed gear case size and four pole motor power.

Motor power hp / Type	Stages	0.16~0.5	0.75~1	1.5~2	3~4	5	7.5	10
JRTRX/RXF59	1	1.65-5.50	1.30-4.35	1.30-3.79	1.30-2.64 3.14	1.30-2.64	1.30-2.04	1.30-2.04
JRTRX/RXF69	1	2.04-6.07	1.61-5.18	1.40-4.53	1.40-3.77	1.40-3.20	1.40-2.54	1.40-2.54
JRTRX/RXF79	1	2.70-8.00	2.13-6.41	1.42-5.63	1.42-4.73	1.42-4.04	1.42-3.25	1.42-3.25
JRTRX/RXF89	1		3.09-8.65	2.15-7.63	1.60-6.45	1.60-5.56	1.39-4.50	1.39-4.50
JRTRX/RXF99	1		4.04-8.23	2.92-8.23	2.24-8.23	2.24-7.16	1.42-5.79	1.42-5.79
JRTRX/RXF109	1				2.64-6.63	2.64-6.63	1.71-6.63	1.71-6.63
JRTR/RF19	2	3.83-25.23	3.83-19.71					
JRTR/RF19	3	24.07-81.64	24.07-81.64	3.37-8.16				
JRTR/RF29	2	3.37-28.37	3.37-22.32	10.13-19.35	3.37-6.59 10.13-15.63			
JRTR/RF29	3	24.47-135.09	24.47-105.49	24.47-48.17 61.30-90.96	24.47-32.47 39.25 61.30 74.11			
JRTR/RF39	2	3.41-28.32	3.41-22.27	3.41-19.31	3.41-15.60			
JRTR/RF39	3	24.42-134.82	24.42-105.28	24.42-48.08 61.18-90.77	24.42-32.40 39.17 61.18 73.96			
JRTR/RF49	2	4.85-7.76 10.15-33.79	3.83-26.74	3.83-23.28	3.83-16.22 19.27	3.83-16.22	3.83-6.00 8.01-12.54	3.83-6.00 8.01-12.54
JRTR/RF49	3	29.88-176.88	23.59-139.99	23.59-121.87	23.59-47.75 56-73 76.23-84.90 100.86	23.59-47.75		23.59-36.93
JRTR/RF59	2	6.41-9.06 11.88-26.31	5.05-26.31	4.39-26.31	4.39-21.93	4.39-18.60	4.39-7.97 9.35-14.77	4.39-7.97 9.35-14.77
JRTR/RF59	3	30.18-186.89	26.97-147.92	26.97-128.77	26.97-48.23 57.29 80.55-89.71 106.58	26.97-48.23 80.55-89.71	26.97-37.30	26.97-37.30
JRTR/RF69	2	6.27-7.79 12.70-28.13	4.93-7.79 10.00-28.13	4.29-28.13	4.29-23.44	4.29-19.89	4.29-15.79	4.29-15.79
JRTR/RF69	3	32.27-199.81	28.83-158.14	28.83-137.67	28.83-51.56 61.26-95.91 113.94	28.83-51.56 69.75-95.91	28.83-39.88 69.75-74.17	28.83-39.88 69.75-74.17
JRTR/RF79	2	8.59 15.60-23.37	6.79-8.59 12.33-23.37	5.31-23.37	5.31-23.37	5.31-23.37	5.31-18.80	5.31-18.80
JRTR/RF79	3	36.83-195.24	29.00-166.59	25.23-145.67	25.23-121.42	25.23-102.99	25.23-45.81 65.77-81.80	25.23-45.81 65.77-81.80
JRTR/RF89	2		19.10-34.40	7.13-9.14 13.33-34.40	5.30-34.40	5.30-34.40	5.30-27.84	5.30-27.84
JRTR/RF89	3		41.74-246.54	27.88-216.54	27.88-181.77	27.88-155.34	27.88-63.68 81.92-124.97	27.88-63.68 81.92-124.97
JRTR/RF99	2		22.37-32.05	9.29 16.17-32.05	7.12-9.29 12.39-32.05	7.12-9.29 12.39-32.05	4.50-32.05	4.50-32.05
JRTR/RF99	3		53.21-65.21 103.44-289.74	37.13-255.71	27.58-216.28	27.58-186.30	27.58-150.78	27.58-150.78
JRTR/RF109	2				15.65-30.77	15.65-30.77	5.82-7.86 10.13-30.77	5.82-7.86 10.13-30.77
JRTR/RF109	3					40.37-251.15	29.49-203.16	29.49-203.16
JRTR/RF139	2						7.59 12.83-29.57	7.59 12.83-29.57
JRTR/RF139	3						32.91-222.60	32.91-222.60



Motor power hp / Type	Stages	12.3	15	20	25-30	40	50~60	75
JRTRX/RXF79	1	1.42-2.43	1.42-2.43					
JRTRX/RXF89	1	1.39-3.48	1.39-3.48	1.39-3.48	1.39-2.76			
JRTRX/RXF99	1	1.42-4.52	1.42-4.52	1.42-4.52	1.42-3.64	1.42-29.2		
JRTRX/RXF109	1	1.44-5.19	1.44-5.19	1.44-5.19	1.44-4.20	1.44-3.38	1.44-3.38	
JRTR/RF79	2	5.31-7.74 9.64-14.05	5.31-7.74 9.64-14.05					
JRTR/RF79	3	25.23-33.47	25.23-33.47					
JRTR/RF89	2	5.30-21.51	5.30-21.51	5.30-21.51	5.30-17.08			
JRTR/RF89	3	27.88-47.58 81.92-93.38	27.88-47.58 81.92-93.38	27.88-47.58 81.92-93.38	27.88-36.84			
JRTR/RF99	2	4.50-25.03	4.50-25.03	4.50-25.03	4.50-20.14	4.50-16.17		
JRTR/RF99	3	27.58-59.92 72.17-116.48	27.58-59.92 72.17-116.48	27.58-59.92 72.17-116.48	27.58-47.58 72.17-92.48	27.58-37.13 72.17		
JRTR/RF109	2	4.92-30.77	4.92-30.77	4.92-30.77	4.92-24.90	4.92-20.07	4.92-20.07	
JRTR/RF109	3	29.49-158.68	29.49-158.68	29.49-158.68	29.49-65.60 78.57-127.68	29.49-52.68 78.57-102.53	29.49-52.68 78.57-102.53	
JRTR/RF139	2	6.38-7.59 10.79-29.57	6.38-7.59 10.79-29.57	6.38-7.59 10.79-29.57	5.15-29.57	5.15-24.12	5.15-24.12	5.15-19.04
JRTR/RF139	3	27.83-174.40	27.83-174.40	27.83-174.40	27.83-141.12	27.83-65.20 88.70-113.72	27.83-65.20 88.70-113.72	27.83-50.86 88.70
JRTR/RF149	2	7.25 11.99-20.44	7.25 11.99-20.44	7.25 11.99-20.44	5.89-7.25 9.74-20.44	5.00-20.44	5.00-20.44	5.00-20.44
JRTR/RF149	3	29.95-163.31	29.95-163.31	29.95-163.31	24.19-146.91	24.19-119.86	24.19-119.86	24.19-52.87 72.09-94.60
JRTR/RF169	2		14.48-46.00	14.48-46.00	11.99-37.74	10.24-30.71	10.24-30.71	10.24-24.57
JRTR/RF169	3		34.41-229.71	34.41-229.71	27.96-186.93	23.71-153.07	23.71-153.07	23.71-58.65 82.91-121.81

Motor power HP / Type	Stages	100~125	150~200	250~300				
JRTR/RF149	2	5.00-20.44						
JRTR/RF149	3	24.19-52.87 72.09-94.60						
JRTR/RF169	2	10.24-24.57	10.24-19.03	10.24-14.48				
JRTR/RF169	3	23.71-58.65 82.91-121.81	23.71-44.87 82.91-93.19	23.71-34.41				

4. Ratio and max nominal torque



JRTRX59-109 n_e=1700 r/min

JRTRX59			610 lbf · in	
i	n_a [r/min]	M_{amax} lbf · in	F_{Ra} lbf	AD
5.50	309	345	650	AD2
5.07	335	315	635	
4.35	391	600	550	
3.79	449	610	515	
3.55	479	610	500	
3.14	541	575	480	
2.91	584	590	405	
2.64	644	610	325	
2.37	717	610	260	AD3
2.04	833	610	166	
1.92	885	610	126	
1.65	1030	610	27	
1.48	1150	600	-	
1.30	1310	555	-	

JRTRX69			1180 lbf · in	
i	n_a [r/min]	M_{amax} lbf · in	F_{Ra} lbf	AD
6.07	280	380	840	AD2
5.18	328	660	745	
4.53	375	725	700	
4.30	395	705	685	
3.77	451	765	640	
3.20	531	880	580	AD3
2.89	588	930	545	
2.54	669	1040	340	
2.40	708	1080	235	
2.04	833	1180	-	
1.86	914	1110	-	
1.61	1055	1000	-	
1.40	1215	920	-	

JRTRX79			1900 lbf · in	
i	n_a [r/min]	M_{amax} lbf · in	F_{Ra} lbf	AD
8.00	212	500	1330	AD2
7.47	228	465	1300	
6.41	265	910	1170	
5.63	302	970	1110	
5.35	318	910	1100	
4.73	359	1080	1020	AD3
4.04	421	1260	930	
3.70	459	1350	890	
3.25	523	1610	570	AD4
3.08	552	1700	425	
2.70	630	1900	103	
2.43	700	1900	-	
2.13	798	1760	-	
1.88	904	1650	-	
1.67	1020	1530	-	
1.42	1195	1370	-	

JRTRX89			3580 lbf · in	
i	n_a r/min	M_{amax} lbf · in	F_{Ra} lbf	AD
8.65	197	1220	1650	AD2
7.63	223	1310	1570	
7.20	236	1230	1550	
6.45	264	1690	1430	AD3
5.56	306	1990	1320	
5.07	335	2210	1250	
4.50	378	2560	1140	AD4
3.78	450	2690	1040	
3.48	489	3580	440	AD5
3.09	550	3580	270	
2.76	616	3580	91	
2.48	685	3580	-	
2.15	791	3400	-	
1.93	881	3140	-	
1.60	1060	2780	-	
1.39	1225	2560	-	

JRTRX99			5260 lbf · in	
i	n_a [r/min]	M_{amax} lbf · in	F_{Ra} lbf	AD
8.23	207	1990	2000	AD3
7.16	237	2300	1870	
6.56	259	2650	1780	
5.79	294	3710	1590	AD4
4.91	346	3490	1500	
4.52	376	5260	1160	AD5
4.04	421	5260	970	
3.64	467	5260	795	
3.30	515	5260	620	
2.92	582	5260	425	
2.64	644	5260	235	
2.24	759	5260	-	
1.96	867	5040	-	
1.64	1035	4460	-	
1.42	1195	4020	-	AD6

JRTRX109			7340 lbf · in	
i	n_a [r/min]	M_{amax} lbf · in	F_{Ra} lbf	AD
6.63	256	4070	2010	AD4
5.61	303	4020	1880	
5.19	328	6140	1600	AD5
4.65	366	6140	1510	
4.20	405	7340	1090	
3.81	446	7340	900	
3.38	503	7340	670	
3.07	554	7340	480	AD6
2.64	644	7340	167	
2.30	739	7340	-	
1.95	872	6760	-	
1.71	994	6230	-	
1.44	1180	5700	-	

JRTR19-39 n_e=1700r/min



JRTR19			750 lbf · in
i	n_a [r/min]	M_{amax} lbf · in	F_{Ra} lbf
3-stage			
81.64	21	750	395
70.39	24	750	395
65.61	26	750	395
57.35	30	750	395
53.76	32	750	395
47.44	36	750	395
44.18	38	750	395
38.61	44	750	395
36.20	47	750	395
31.94	53	750	385
28.32	60	750	365
24.07	71	750	340
2-stage			
25.23	67	750	345
23.15	73	750	330
19.71	86	750	310
16.99	100	750	285
15.84	107	750	275
13.84	123	750	260
12.98	131	750	250
11.45	148	715	240
10.15	167	680	230
8.63	197	635	220
7.55	225	495	210
7.04	241	485	205
6.15	276	475	194
5.76	295	465	190
5.09	334	450	182
4.51	377	420	176
3.83	444	395	168

JRTR29			1150 lbf · in	
i	n_a [r/min]	M_{amax} lbf · in	F_{Ra} lbf	AD
3-stage				
135.09	13	1150	950	
123.91	14	1150	950	
105.49	16	1150	950	AD1
90.96	19	1150	950	
84.78	20	1150	940	
74.11	23	1150	890	
69.47	24	1150	870	
61.30	28	1150	830	
55.87	30	1150	800	
48.17	35	1150	755	
44.90	38	1150	735	AD1
39.25	43	1150	695	
36.79	46	1150	680	
32.47	52	1150	645	
28.78	59	1150	615	
24.47	69	1150	575	
2-stage				
28.37	60	1150	610	
26.09	65	1150	590	
22.32	76	1150	550	
19.35	88	1150	520	
18.08	94	1150	505	
15.63	109	1150	475	
13.28	128	1150	410	
11.86	143	1140	370	
10.13	168	1070	355	
9.41	181	1070	133	AD2
8.16	208	1020	129	
7.63	223	990	137	
6.59	258	930	136	
5.60	304	870	139	
5.00	340	840	136	
4.27	398	765	153	
4.00	425	750	151	
3.37	504	695	152	

JRTR39			1760 lbf · in	
i	n_a [r/min]	M_{amax} lbf · in	F_{Ra} lbf	AD
3-stage				
134.82	13	1760	1110	
123.66	14	1760	1110	
105.28	16	1760	1110	
90.77	19	1760	1110	
84.61	20	1760	1110	AD1
73.96	23	1760	1110	
69.33	25	1760	1110	
61.18	28	1760	1110	
55.76	30	1760	1110	
48.08	35	1760	1080	
44.81	38	1760	1020	
39.17	43	1760	920	
36.72	46	1760	880	AD2
32.40	52	1760	790	
28.73	59	1760	705	
24.42	70	1760	605	
2-stage				
28.32	60	1760	700	
26.03	65	1630	740	
22.27	76	1760	545	
19.31	88	1760	460	
18.05	94	1760	425	
15.60	109	1760	345	
13.25	128	1680	320	
11.83	144	1610	310	
10.11	168	1500	315	AD2
9.47	180	1470	305	
7.97	213	1380	300	
6.67	255	1270	144	
5.67	300	1250	94	
5.06	336	1190	104	
4.32	394	1110	114	
4.05	420	1070	121	
3.41	499	990	138	

JRTR49-69 n_e=1700r/min



JRTR49				2650 lbf · in
i	n_a [r/min]	M_{amax} lbf · in	F_{Ra} lbf	AD
3-stage				
176.88	9.6	2650	1220	
162.94	10	2650	1220	
139.99	12	2650	1220	
121.87	14	2650	1220	
114.17	15	2650	1220	
100.86	17	2650	1220	
93.68	18	2650	1220	
84.90	20	2650	1220	
76.23	22	2650	1220	
68.54	25	2650	1220	AD_2
64.21	26	2650	1220	
56.73	30	2650	1150	
52.69	32	2650	1110	
47.75	36	2650	1070	
42.87	40	2650	1020	
36.93	46	2650	960	
34.73	49	2650	940	
29.88	57	2650	880	
26.70	64	2650	840	
23.59	72	2650	775	
2-stage				
33.79	50	2120	970	
31.12	55	1940	960	
26.74	64	2650	840	
23.28	73	2650	760	
21.81	78	2650	710	
19.27	88	2610	640	
17.89	95	2560	615	
16.22	105	2430	625	
14.56	117	2340	605	
12.54	136	2210	590	AD_2
11.79	144	2160	575	
10.15	167	2030	565	
9.07	187	1940	550	
8.01	212	1810	555	
7.76	219	1440	565	
6.96	244	1400	540	
6.00	283	1380	510	
5.64	301	1370	500	
4.85	351	1320	470	
4.34	392	1290	455	
3.83	444	1270	430	AD_3

JRTR59				3980 lbf · in
i	n_a [r/min]	M_{amax} lbf · in	F_{Ra} lbf	AD
3-stage				
186.89	9.1	3980	1600	
172.17	9.9	3980	1600	
147.92	11	3980	1600	
128.77	13	3980	1600	
120.63	14	3980	1600	
106.58	16	3980	1600	
98.99	17	3980	1600	
89.71	19	3980	1600	AD_2
80.55	21	3980	1580	
69.23	25	3980	1490	
64.85	26	3980	1450	
57.29	30	3980	1370	
53.22	32	3980	1330	
48.23	35	3980	1280	
43.30	39	3980	1220	
37.30	46	3980	1140	
35.07	48	3980	1110	
30.18	56	3980	1040	
26.97	63	3980	990	
2-stage				
26.31	65	3980	980	
24.99	68	3980	950	
21.93	78	3980	900	AD_2
18.60	91	3980	830	
16.79	101	3980	745	
14.77	115	3840	695	
13.95	122	3800	670	
11.88	143	3580	645	
10.79	158	3450	635	
9.35	182	3270	615	
9.06	188	3310	305	
7.97	213	3140	315	AD_3
7.53	226	3090	300	
6.41	265	2960	270	
5.82	292	2830	285	
5.05	337	2690	270	
4.39	387	2470	315	

JRTR69				5300 lbf · in
i	n_a [r/min]	M_{amax} lbf · in	F_{Ra} lbf	AD
3-stage				
199.81	8.5	5300	1700	
184.07	9.2	5300	1700	
158.14	11	5300	1700	
137.67	12	5300	1700	
128.97	13	5300	1700	
113.94	15	5300	1700	
105.83	16	5300	1700	
95.91	18	5300	1700	
86.11	20	5300	1700	AD_2
74.17	23	5300	1700	
69.75	24	5300	1700	
61.26	28	5300	1700	
56.89	30	5300	1700	
51.56	33	5300	1700	
46.29	37	5300	1700	
39.88	43	5130	1750	
37.50	45	5040	1780	
32.27	53	4770	1850	
28.83	59	4600	1890	
2-stage				
28.13	60	4770	1850	
26.72	64	4770	1850	AD_2
23.44	73	4950	1760	
19.89	85	5300	1470	
17.95	95	5220	1380	
15.79	108	4950	1350	
14.91	114	4860	1320	
12.70	134	4600	1260	
11.54	147	4420	1230	
10.00	170	4150	1200	
8.70	195	3890	1190	AD_3
7.79	218	3360	1110	
7.36	231	3270	1100	
6.27	271	2910	1150	
5.70	298	2740	1130	
4.93	345	2560	1080	
4.29	396	2380	1040	

JRTR79-99 n_e=1700r/min



JRTR79				7250 lbf · in
i	n_a [r/min]	M_{amax} lbf · in	F_{Ra} lbf	AD
3-stage				
195.24	8.7	7250	2230	
166.59	10	7250	2230	
145.67	12	7250	2230	
138.39	12	7250	2230	
121.42	14	7250	2230	
102.99	17	7250	2230	
92.97	18	7250	2230	
81.80	21	7250	2230	
77.24	22	7250	2230	AD_2
65.77	26	7250	2230	
57.68	29	7250	2230	
52.07	33	7250	2230	
45.81	37	7250	2230	
43.26	39	7250	2230	
36.83	46	7250	2230	
33.47	51	7250	2230	
29.00	59	7250	2030	
25.23	67	6900	1950	
2-stage				
23.37	73	7250	1690	
21.43	79	7250	1560	
18.80	90	6900	1510	
17.82	95	6900	1430	
15.60	109	6540	1390	AD_3
14.05	121	6370	1330	
12.33	138	6100	1270	
10.88	156	5830	1220	
9.64	176	5570	1190	
8.59	198	5570	705	
7.74	220	5390	675	
6.79	250	5130	660	AD_4
5.99	284	4770	700	
5.31	320	4510	710	

JRTR89				13700 lbf · in
i	n_a [r/min]	M_{amax} lbf · in	F_{Ra} lbf	AD
3-stage				
246.54	6.9	13700	3800	
216.54	7.9	13700	3800	
205.71	8.3	13700	3800	
181.77	9.4	13700	3800	
155.34	11	13700	3800	
142.41	12	13700	3800	
124.97	14	13700	3800	
118.43	14	13700	3800	AD_2
103.65	16	13700	3800	
93.38	18	13700	3800	
81.92	21	13700	3730	
72.57	23	13700	3380	
63.68	27	13700	3020	
60.35	28	13700	2880	
52.82	32	13700	2540	
47.58	36	13700	2280	
41.74	41	13700	1970	
36.84	46	13700	1680	AD_3
32.66	52	13700	1420	
27.88	61	13200	1250	
2-stage				
34.40	49	13200	1690	AD_3
31.40	54	13700	1330	
27.84	61	13700	1080	
23.40	73	13700	740	
21.51	79	13200	740	
19.10	89	12700	720	
17.08	100	12200	685	AD_4
15.35	111	11800	665	
13.33	128	11300	630	
11.93	142	10800	615	
9.90	172	10400	500	
9.14	186	10700	-	
8.22	207	10200	-	
7.13	238	9460	-	AD_5
6.39	266	9020	-	
5.30	321	8050	149	

JRTR99				26500 lbf · in
i	n_a [r/min]	M_{amax} lbf · in	F_{Ra} lbf	AD
3-stage				
289.74	5.9	26500	4450	
255.71	6.6	26500	4450	
241.25	7.0	26500	4450	
216.28	7.9	26500	4450	
186.30	9.1	26500	4450	
170.02	10.0	26500	4450	
150.78	11	26500	4450	
126.75	13	26500	4450	AD_3
116.48	15	26500	4450	
103.44	16	26500	4450	
92.48	18	26500	4270	
83.15	20	26500	3840	
72.17	24	26500	3300	
65.21	26	26500	2930	
59.92	28	26500	2620	
53.21	32	26500	2210	
47.58	36	26500	1840	
42.78	40	26500	1500	
37.13	46	26500	1060	AD_4
33.25	51	25500	1030	
27.58	62	23600	1090	
2-stage				
32.05	53	22600	1800	AD_4
27.19	63	22600	1340	
25.03	68	25000	400	
22.37	76	24000	400	
20.14	84	23000	430	
18.24	93	22100	485	
16.17	105	21200	470	
14.62	116	20300	510	
12.39	137	19300	445	AD_5
10.83	157	18400	435	
9.29	183	17900	-	
8.39	203	17900	-	
7.12	239	17600	-	
6.21	274	16700	-	
5.20	327	15700	-	
4.50	378	14400	-	AD_6

JRTR109-149 n_e=1700r/min



JRTR109				38000 lbf · in
i	n_a [r/min]	M_{amax} lbf · in	F_{Ra} lbf	AD
3-stage				
251.15	6.8	38000	6620	
229.95	7.4	38000	6620	
203.16	8.4	38000	6620	
172.34	9.9	38000	6620	
158.68	11	38000	6620	
141.83	12	38000	6620	AD_3
127.68	13	38000	6620	
115.63	15	38000	6620	
102.53	17	38000	6620	
92.70	18	38000	6620	
78.57	22	38000	6520	
72.88	23	38000	6320	
65.60	26	38000	6050	
59.41	29	38000	5800	
52.68	32	38000	5510	AD_4
47.63	36	38000	5280	
40.37	42	38000	4910	
35.26	48	38000	4620	
29.49	58	38000	4260	
2-stage				
30.77	55	38000	4340	
27.58	62	38000	4130	
24.90	68	38000	3940	
22.62	75	38000	3760	AD_4
20.07	85	38000	3550	
18.21	93	38000	3390	
15.65	109	38000	3140	
13.66	124	38000	2930	
11.59	147	38000	2690	
10.13	168	38000	2500	
8.56	199	38000	2280	AD_6
7.86	216	26200	2840	
6.66	255	26200	2640	
5.82	292	26200	2480	
4.92	346	25600	2320	

JRTR139				70700 lbf · in
i	n_a [r/min]	M_{amax} lbf · in	F_{Ra} lbf	AD
3-stage				
222.60	7.6	70700	12000	
188.45	9.0	70700	12000	
174.40	9.7	70700	12000	
156.31	11	70700	12000	
141.12	12	70700	12000	
128.18	13	70700	12000	AD_4
113.72	15	70700	12000	
103.20	16	70700	12000	
88.70	19	70700	12000	
80.91	21	70700	12000	
73.49	23	70700	12000	
65.20	26	70700	12000	
59.17	29	70700	12000	
50.86	33	70700	12000	
44.39	38	70700	12000	
37.65	45	70700	12000	AD_5
32.91	52	70700	11800	
27.83	61	67900	11100	
2-stage				
29.57	57	68800	11400	AD_6
24.12	70	70700	10000	
22.00	77	70700	9520	
19.04	89	70700	8770	
16.80	101	70700	8150	
14.51	117	70700	7450	
12.83	133	70700	6890	AD_7
10.79	158	70700	6130	
8.71	195	69300	5410	
7.59	224	45200	8000	
6.38	266	45200	7340	
5.15	330	40700	7070	

JRTR149				115000 lbf · in
i	n_a [r/min]	M_{amax} lbf · in	F_{Ra} lbf	AD
3-stage				
163.31	10	115000	14100	
146.91	12	115000	14100	
119.86	14	115000	14100	AD_4
109.31	16	115000	14100	
94.60	18	115000	14100	
83.47	20	115000	14100	
72.09	24	115000	14100	
66.99	25	115000	14100	
61.09	28	115000	14100	AD_5
52.87	32	115000	14100	
46.65	36	115000	14100	
40.29	42	115000	14100	AD_6
35.64	48	115000	14100	
29.95	57	115000	14100	AD_7
24.19	70	105200	14500	
2-stage				
20.44	83	106100	14500	
18.04	94	92900	15100	
15.64	109	115000	14100	
13.91	122	111400	13500	
11.99	142	115000	12300	
9.74	175	115000	11000	AD_8
8.26	206	115000	10100	
7.25	234	76700	12000	
5.89	289	76700	10900	
5.00	340	76700	10100	

JRTR169 n_e=1700r/min



JRTR169			159200 lbf · in	
i	n_a [r/min]	M_{amax} lbf · in	F_{Ra} lbf	AD
3-stage				
229.71	7.4	159200	27000	AD_5
186.93	9.1	159200	27000	
153.07	11	159200	27000	
139.98	12	159200	27000	
121.81	14	159200	27000	
107.49	16	159200	27000	
93.19	18	159200	27000	
82.91	21	159200	27000	
73.70	23	159200	27000	
67.40	25	159200	27000	AD_6
58.65	29	159200	27000	
51.76	33	159200	27000	
44.87	38	159200	27000	AD_7
39.92	43	159200	27000	
34.41	49	159200	27000	
27.96	61	159200	25900	AD_8
23.71	72	159200	24100	
2-stage				
46.00	37	61900	27000	AD_5
37.74	45	79600	27000	AD_6
30.71	55	88400	27000	
24.57	69	123800	26900	AD_8
21.85	78	115000	26300	
19.03	89	141500	23100	
16.98	100	132700	22600	
14.48	117	159200	19300	
11.99	142	150400	18200	
10.24	166	150400	16900	

JRTR29/39R19,JRTR49R39 n_e=1700r/min



JRTR29R19				1150 lbf · in	
i	n_a [r/min]	Stage R29	Stage R19	M_{amax} lbf · in	F_{Ra} lbf
8612	0.20	3	3	1150	950
7425	0.23	3	3	1150	745
6921	0.25	3	3	1150	950
6050	0.28	3	3	1150	950
5217	0.33	3	3	1150	745
4661	0.36	3	3	1150	950
4073	0.42	3	3	1150	745
3516	0.48	3	3	1150	950
3160	0.54	3	3	1150	950
2763	0.62	3	3	1150	950
2414	0.70	3	3	1150	950
2110	0.81	3	3	1150	950
1862	0.91	3	3	1150	950
1625	1.0	2	3	1150	745
1434	1.2	3	3	1150	950
1254	1.4	2	3	1150	950
1822	0.93	2	3	1150	950
1580	1.1	3	3	1150	950
1464	1.2	2	3	1150	950
1270	1.3	3	3	1150	950
1100	1.5	3	2	1150	950
972	1.7	2	3	1150	950
840	2.0	2	3	1150	950
741	2.3	3	2	1150	950
654	2.6	3	2	1150	950
566	3.0	2	3	1150	950
499	3.4	3	2	1150	950
1101	1.5	2	3	1150	950
962	1.8	2	3	1150	950
848	2.0	3	2	1150	745
743	2.3	3	2	1150	745
649	2.6	2	3	1150	950
567	3.0	3	2	1150	950
509	3.3	2	3	1150	950
432	3.9	2	2	1150	950
387	4.4	3	2	1150	950
339	5.0	3	2	1150	745
296	5.7	2	2	1150	745
259	6.6	3	2	1150	950
229	7.4	2	2	1150	950
200	8.5	3	2	1150	950
177	9.6	2	2	1150	745
166	10	3	2	1150	950
150	11	2	2	1150	950
141	12	3	2	1150	950
124	14	2	2	1150	745
110	15	2	2	1150	950
94	18	3	2	1150	950
440	3.9	2	2	1150	950
381	4.5	3	2	1150	950
329	5.2	3	2	1150	950
290	5.9	2	2	1150	950
256	6.6	3	2	1150	950
227	7.5	3	2	1150	950
203	8.4	2	2	1150	950
179	9.5	3	2	1150	950
156	11	2	2	1150	950
135	13	3	2	1150	950
118	14	2	2	1150	950
104	16	3	2	1150	950
90	19	2	2	1150	950

JRTR39R19				1760 lbf · in	
i	n_a [r/min]	Stage R39	Stage R19	M_{amax} lbf · in	F_{Ra} lbf
8595	0.20	3	3	1760	1110
7411	0.23	3	3	1760	1110
6907	0.25	3	3	1760	1110
6038	0.28	3	3	1760	1110
5206	0.33	3	3	1760	1110
4651	0.37	3	3	1760	1110
4065	0.42	3	3	1760	1110
3658	0.46	3	3	1760	1110
3154	0.54	3	3	1760	1110
2757	0.62	3	3	1760	1110
2409	0.71	3	3	1760	1110
2106	0.81	3	3	1760	1110
1856	0.92	3	3	1760	1110
1622	1.0	2	3	1760	1110
1431	1.2	3	3	1760	1110
1251	1.4	2	3	1760	1110
1818	0.94	3	3	1760	1110
1576	1.1	2	3	1760	1110
1359	1.3	2	3	1760	1110
1267	1.3	3	3	1760	1110
1098	1.5	3	2	1760	1110
970	1.8	2	3	1760	1110
839	2.0	2	3	1760	1110
740	2.3	3	2	1760	1110
653	2.6	3	2	1760	1110
577	2.9	2	3	1760	1110
498	3.4	3	2	1760	1110
1099	1.5	2	3	1760	1110
960	1.8	2	3	1760	1110
847	2.0	3	2	1760	1110
741	2.3	2	3	1760	1110
647	2.6	3	2	1760	1110
566	3.0	3	2	1760	1110
508	3.3	2	3	1760	1110
431	3.9	2	2	1760	1110
387	4.4	3	2	1760	1110
338	5.0	3	2	1760	1110
296	5.7	2	2	1760	1110
259	6.6	3	2	1760	1110
228	7.5	2	2	1760	1110
199	8.5	3	2	1760	1110
172	9.9	2	2	1760	1110
150	11	2	2	1760	1110
130	13	3	2	1760	1110
124	14	3	2	1760	1110
110	15	2	2	1760	1110
94	18	2	2	1760	1110
439	3.9	3	2	1760	1110
378	4.5	2	2	1760	1110
328	5.2	3	3	1760	1110
289	5.9	2	2	1760	1110
265	6.4	3	3	1760	1110
226	7.5	2	3	1760	1110
202	8.4	3	2	1760	1110
179	9.5	2	3	1760	1110
156	11	3	2	1760	1110
135	13	3	2	1760	1110
127	13	2	3	1760	1110
104	16	3	2	1760	1110
90	19	2	2	1760	1110

JRTR49R39				2650 lbf · in	
i	n_a [r/min]	Stage R49	Stage R39	M_{amax} lbf · in	F_{Ra} lbf
13598	0.13	3	3	2650	1220
12472	0.14	3	3	2650	1220
10619	0.16	3	3	2650	1220
9155	0.19	3	3	2650	1220
8534	0.20	3	3	2650	1220
7460	0.23	3	3	2650	1220
6993	0.24	3	3	2650	1220
6171	0.28	3	3	2650	1220
5624	0.30	3	3	2650	1220
4849	0.35	3	3	2650	1220
4520	0.38	3	3	2650	1220
3951	0.43	3	3	2650	1220
3704	0.46	3	3	2650	1220
3268	0.52	3	3	2650	1220
2898	0.59	3	3	2650	1220
2463	0.69	3	2	2650	1220
2598	0.65	3	2	2650	1220
2383	0.71	2	3	2650	1220
2029	0.84	3	3	2650	1220
1749	0.97	2	3	2650	1220
1630	1.0	3	2	2650	1220
1425	1.2	2	3	2650	1220
1336	1.3	3	2	2650	1220
1179	1.4	3	2	2650	1220
1074	1.6	2	3	2650	1220
927	1.8	2	3	2650	1220
863	2.0	2	2	2650	1220
755	2.3	3	3	2650	1220
708	2.4	2	3	2650	1220
624	2.7	3	2	2650	1220
554	3.1	2	3	2650	1220
471	3.6	2	3	2650	1220
2856	0.60	3	2	2650	1220
2625	0.65	3	2	2650	1220
2246	0.76	2	3	2650	1220
1948	0.87	2	3	2650	1220
1821	0.93	3	2	2650	1220
1573	1.1	2	3	2650	1220
1193	1.4	2	3	2650	1220
1020	1.7	3	2	2650	1220
955	1.8	2	3	2650	1220
804	2.1	3	2	2650	1220
673	2.5	2	3	2650	1220
572	3.0	2	2	2650	1220
510	3.3	3	2	2650	1220
436	3.9	2	2	2650	1220
408	4.2	2	3	2650	1220
344	4.9	3	2	2650	1220
546	3.1	2	2	2650	1220
502	3.4	3	2	2650	1220
429	4.0	2	2	2650	1220
372	4.6	2	2	2650	1220
348	4.9	3	2	2650	1220
301	5.6	2	2	2650	1220
255	6.7	2	2	2650	1220
228	7.5	2	2	2650	1220
195	8.7	2	2	2650	1220
182	9.3	2	2	2650	1220
154	11	2	2	2650	1220
129	13	2	2	2650	1220
109	16	2	2	2650	1220
98	17	2	2	2650	1220

JRTR59/69/79R39 n_e=1700r/min



JRTR59R39				3980 lbf · in	
i	n_a [r/min]	Stage R59	Stage R39	M_{amax} lbf · in	F_{Ra} lbf
14369	0.12	3	3	3980	1600
12095	0.14	3	3	3980	1600
10860	0.16	3	3	3980	1600
9445	0.18	3	3	3980	1600
8480	0.20	3	3	3980	1600
7312	0.23	3	3	3980	1600
6521	0.26	3	3	3980	1600
5585	0.30	3	3	3980	1600
4928	0.34	3	3	3980	1600
4378	0.39	3	3	3980	1600
3873	0.44	3	3	3980	1600
3344	0.51	3	3	3980	1600
2907	0.58	2	3	3980	1600
2567	0.66	3	3	3980	1600
2244	0.76	3	3	3980	1600
1967	0.86	2	3	3980	1600
2957	0.57	2	3	3980	1600
2508	0.68	3	3	3980	1600
2309	0.74	2	3	3980	1600
1991	0.85	3	3	3980	1600
1768	0.96	2	3	3980	1600
1520	1.1	3	2	3980	1600
1342	1.3	3	2	3980	1600
1164	1.5	2	3	3980	1600
1027	1.7	3	2	3980	1600
894	1.9	2	3	3980	1600
805	2.1	3	2	3980	1600
683	2.5	2	3	3980	1600
603	2.8	3	2	3980	1600
534	3.2	2	3	3980	1600
454	3.7	2	3	3980	1600
410	4.1	2	3	3980	1600
1732	0.98	3	2	3980	1600
1555	1.1	2	3	3980	1600
1399	1.2	3	2	3980	1600
1189	1.4	3	2	3980	1600
1034	1.6	2	3	3980	1600
782	2.2	3	2	3980	1600
678	2.5	2	3	3980	1600
604	2.8	3	2	3980	1600
537	3.2	2	3	3980	1600
471	3.6	2	3	3980	1600
357	4.8	2	2	3980	1600
319	5.3	3	2	3980	1600
273	6.2	2	2	3980	1600
241	7.1	3	2	3980	1600
215	7.9	2	2	3980	1600
187	9.1	3	2	3980	1600
164	10	2	2	3980	1600
142	12	2	2	3980	1600
359	4.7	3	2	3980	1600
324	5.2	2	2	3980	1600
290	5.9	3	2	3980	1600
262	6.5	2	2	3980	1600
246	6.9	3	2	3980	1600
220	7.7	3	2	3980	1600
188	9.0	2	2	3980	1600
159	11	2	2	3980	1600
146	12	3	2	3980	1600
134	13	2	2	3980	1600

JRTR69R39				5300 lbf · in	
i	n_a [r/min]	Stage R69	Stage R39	M_{amax} lbf · in	F_{Ra} lbf
15361	0.11	3	3	5300	1700
12931	0.13	3	3	5300	1700
11996	0.14	3	3	5300	1700
10097	0.17	3	3	5300	1700
9066	0.19	3	3	5300	1700
7816	0.22	3	3	5300	1700
6732	0.25	3	3	5300	1700
5970	0.28	3	3	5300	1700
5268	0.32	3	3	5300	1700
4680	0.36	3	3	5300	1700
4136	0.41	3	3	5300	1700
3566	0.48	3	3	5300	1700
3125	0.54	3	3	5300	1700
2745	0.62	3	3	5300	1700
2403	0.71	2	3	5300	1700
2682	0.63	2	3	5300	1700
2460	0.69	3	3	5300	1700
2094	0.81	3	2	5300	1700
1805	0.94	2	3	5300	1700
1629	1.0	3	2	5300	1700
1471	1.2	2	3	5300	1700
1379	1.2	3	2	5300	1700
1109	1.5	2	3	5300	1700
956	1.8	2	3	5300	1700
891	1.9	3	2	5300	1700
730	2.3	2	3	5300	1700
644	2.6	3	2	5300	1700
571	3.0	2	3	5300	1700
486	3.5	3	2	5300	1700
2136	0.80	2	3	5300	1700
1852	0.92	2	3	5300	1700
1652	1.0	3	2	5300	1700
1432	1.2	2	3	5300	1700
1259	1.4	3	2	5300	1700
1106	1.5	2	3	5300	1700
836	2.0	3	2	5300	1700
750	2.3	2	3	5300	1700
646	2.6	3	2	5300	1700
574	3.0	2	3	5300	1700
495	3.4	2	2	5300	1700
438	3.9	3	2	5300	1700
388	4.4	3	2	5300	1700
344	4.9	2	2	5300	1700
294	5.8	2	2	5300	1700
261	6.5	3	2	5300	1700
234	7.3	2	2	5300	1700
200	8.5	3	2	5300	1700
176	9.7	2	2	5300	1700
158	11	3	2	5300	1700
443	3.8	2	2	5300	1700
384	4.4	3	2	5300	1700
359	4.7	2	2	5300	1700
310	5.5	3	2	5300	1700
264	6.4	2	2	5300	1700
235	7.2	2	2	5300	1700
201	8.5	3	2	5300	1700
181	9.4	2	2	5300	1700
159	11	3	2	5300	1700

JRTR79R39				7250 lbf · in	
i	n_a [r/min]	Stage R79	Stage R39	M_{amax} lbf · in	F_{Ra} lbf
16370	0.10	3	3	7250	2230
15015	0.11	3	3	7250	2230
13885	0.12	3	3	7250	2230
12783	0.13	3	3	7250	2230
11021	0.15	3	3	7250	2230
9788	0.17	3	3	7250	2230
8714	0.20	3	3	7250	2230
7617	0.22	3	3	7250	2230
6770	0.25	3	3	7250	2230
5838	0.29	3	3	7250	2230
5184	0.33	3	3	7250	2230
4470	0.38	3	3	7250	2230
3999	0.43	3	3	7250	2230
3488	0.49	3	3	7250	2230
3053	0.56	2	3	7250	2230
2671	0.64	3	3	7250	2230
3151	0.54	2	3	7250	2230
2890	0.59	3	3	7250	2230
2460	0.69	2	3	7250	2230
2121	0.80	3	2	7250	2230
1977	0.86	2	3	7250	2230
1728	0.98	3	2	7250	2230
1620	1.0	2	3	7250	2230
1430	1.2	3	2	7250	2230
1303	1.3	2	3	7250	2230
1124	1.5	2	3	7250	2230
1047	1.6	3	2	7250	2230
915	1.9	2	3	7250	2230
858	2.0	3	2	7250	2230
757	2.2	2	3	7250	2230
671	2.5	3	2	7250	2230
571	3.0	2	3	7250	2230
2345	0.72	3	2	7250	2230
2070	0.82	2	3	7250	2230
1822	0.93	3	2	7250	2230
1580	1.1	2	3	7250	2230
1394	1.2	2	3	7250	2230
1218	1.4	3	2	7250	2230
1084	1.6	2	3	7250	2230
940	1.8	3	2	7250	2230
821	2.1	2	3	7250	2230
731	2.3	3	2	7250	2230
646	2.6	2	3	7250	2230
560	3.0	3	2	7250	2230
488	3.5	2	2	7250	2230
436	3.9	3	2	7250	2230
373	4.6	2	2	7250	2230
327	5.2	3	2	7250	2230
289	5.9	2	2	7250	2230
260	6.5	3	2	7250	2230
224	7.6	2	2	7250	2230
197	8.6	3	2	7250	2230
169	10	2	2	7250	2230
149	11	3	2	7250	2230
520	3.3	2	2	7250	2230
451	3.8	3	2	7250	2230
422	4.0	2	2	7250	2230
365	4.7	3	2	7250	2230
310	5.5	2	2	7250	2230
276	6.2	3	2	7250	2230
236	7.2	2	2	7250	2230
221	7.7	3	2	7250	2230
186	9.1	3	2	7250	2230

JRTR89/99R59,JRTR109R79 n_e=1700r/min



JRTR89R59				13700 lbf · in	
i	n_a [r/min]	Stage R89	Stage R59	M_{amax} lbf · in	F_{Ra} lbf
17452	0.10	3	3	13700	3800
15310	0.11	3	3	13700	3800
13813	0.12	3	3	13700	3800
12025	0.14	3	3	13700	3800
10549	0.16	3	3	13700	3800
9244	0.18	3	3	13700	3800
8109	0.21	3	3	13700	3800
7038	0.24	3	3	13700	3800
6174	0.28	3	3	13700	3800
5449	0.31	3	3	13700	3800
4831	0.35	3	3	13700	3800
4206	0.40	3	3	13700	3800
3744	0.45	2	3	13700	3800
3233	0.53	3	3	13700	3800
2873	0.59	2	3	13700	3800
2518	0.68	3	3	13700	3800
2209	0.77	2	3	13700	3800
1961	0.87	3	3	13700	3800
994	1.7	2	3	13700	3800
881	1.9	2	3	13700	3800
4020	0.42	3	3	13700	3800
3703	0.46	3	3	13700	3800
3182	0.53	2	3	13700	3800
2770	0.61	3	3	13700	3800
2595	0.66	2	3	13700	3800
2129	0.80	3	2	13700	3800
1930	0.88	2	3	13700	3800
1733	0.98	3	2	13700	3800
1489	1.1	2	3	13700	3800
1395	1.2	2	3	13700	3800
1232	1.4	3	2	13700	3800
1145	1.5	2	3	13700	3800
1037	1.6	2	3	13700	3800
931	1.8	3	2	13700	3800
802	2.1	2	3	13700	3800
754	2.3	3	2	13700	3800
649	2.6	3	3	13700	3800
580	2.9	2	2	13700	3800
1737	0.98	3	2	13700	3800
1524	1.1	3	3	13700	3800
1303	1.3	2	3	13700	3800
1143	1.5	3	2	13700	3800
1008	1.7	2	3	13700	3800
885	1.9	3	2	13700	3800
776	2.2	2	3	13700	3800
685	2.5	3	2	13700	3800
599	2.8	2	3	13700	3800
525	3.2	2	2	13700	3800
456	3.7	3	2	13700	3800
398	4.3	2	2	13700	3800
352	4.8	3	2	13700	3800
305	5.6	2	2	13700	3800
268	6.3	3	2	13700	3800
236	7.2	3	2	13700	3800
209	8.1	2	2	13700	3800
538	3.2	3	2	13700	3800
472	3.6	2	2	13700	3800
400	4.2	3	2	13700	3800
361	4.7	2	2	13700	3800
300	5.7	2	2	13700	3800
256	6.6	2	2	13700	3800
232	7.3	3	2	13700	3800
195	8.7	2	2	13700	3800

JRTR99R59				26500 lbf · in	
i	n_a [r/min]	Stage R99	Stage R59	M_{amax} lbf · in	F_{Ra} lbf
21769	0.08	3	3	26500	4450
19332	0.09	3	3	26500	4450
17230	0.10	3	3	26500	4450
14999	0.11	3	3	26500	4450
13320	0.13	3	3	26500	4450
11156	0.15	3	3	26500	4450
10030	0.17	3	3	26500	4450
8706	0.20	3	3	26500	4450
7692	0.22	3	3	26500	4450
6708	0.25	3	3	26500	4450
5931	0.29	3	3	26500	4450
5161	0.33	3	3	26500	4450
4559	0.37	2	3	26500	4450
4004	0.42	3	3	26500	4450
3481	0.49	2	3	26500	4450
4678	0.36	3	3	26500	4450
4309	0.39	2	3	26500	4450
3702	0.46	3	3	26500	4450
3019	0.56	3	2	26500	4450
2668	0.64	2	3	26500	4450
2245	0.76	3	2	26500	4450
2016	0.84	2	3	26500	4450
1733	0.98	3	2	26500	4450
1623	1.0	2	3	26500	4450
1434	1.2	3	2	26500	4450
1207	1.4	2	3	26500	4450
1084	1.6	3	2	26500	4450
934	1.8	2	3	26500	4450
878	1.9	2	3	26500	4450
755	2.3	3	2	26500	4450
3065	0.55	2	3	26500	4450
2722	0.62	3	2	26500	4450
2311	0.74	3	2	26500	4450
2078	0.82	2	3	26500	4450
1823	0.93	2	3	26500	4450
1583	1.1	3	2	26500	4450
1396	1.2	3	2	26500	4450
1228	1.4	2	3	26500	4450
1069	1.6	2	3	26500	4450
938	1.8	3	2	26500	4450
824	2.1	2	3	26500	4450
737	2.3	3	2	26500	4450
632	2.7	3	2	26500	4450
560	3.0	2	2	26500	4450
484	3.5	3	2	26500	4450
431	3.9	2	2	26500	4450
379	4.5	3	2	26500	4450
336	5.1	2	2	26500	4450
296	5.7	3	2	26500	4450
249	6.8	2	2	26500	4450
234	7.3	2	2	26500	4450
209	8.1	2	2	26500	4450
625	2.7	3	2	26500	4450
549	3.1	2	2	26500	4450
466	3.6	3	2	26500	4450
420	4.0	2	2	26500	4450
370	4.6	3	2	26500	4450
349	4.9	3	2	26500	4450
297	5.7	2	2	26500	4450
270	6.3	3	2	26500	4450
227	7.5	2	2	26500	4450

JRTR109R79				38000 lbf · in	
i	n_a [r/min]	Stage R109	Stage R79	M_{amax} lbf · in	F_{Ra} lbf
20018	0.08	3	3	38000	6620
17080	0.10	3	3	38000	6620
14936	0.11	3	3	38000	6620
12829	0.13	3	3	38000	6620
11256	0.15	3	3	38000	6620
9547	0.18	3	3	38000	6620
8618	0.20	3	3	38000	6620
7583	0.22	3	3	38000	6620
6743	0.25	3	3	38000	6620
5914	0.29	3	3	38000	6620
5168	0.33	3	3	38000	6620
4435	0.38	3	3	38000	6620
3896	0.44	2	3	38000	6620
3432	0.50	3	3	38000	6620
3039	0.56	3	3	38000	6620
2688	0.63	2	3	38000	6620
2339	0.73	3	3	38000	6620
3918	0.43	2	3	38000	6620
3343	0.51	3	3	38000	6620
3034	0.56	2	3	38000	6620
2653	0.64	3	3	38000	6620
2280	0.75	2	3	38000	6620
2067	0.82	2	3	38000	6620
1693	1.0	3	2	38000	6620
1550	1.1	3	2	38000	6620
1407	1.2	2	3	38000	6620
1209	1.4	3	2	38000	6620
1055	1.6	2	3	38000	6620
919	1.8	2	3	38000	6620
815	2.1	3	2	38000	6620
717	2.4	3	2	38000	6620
626	2.7	2	3	38000	6620
528	3.2	3	2	38000	6620
1987	0.86	2	3	38000	6620
1827	0.93	3	2	38000	6620
1599	1.1	2	3	38000	6620
1400	1.2	3	2	38000	6620
1226	1.4	2	3	38000	6620
1104	1.5	2	3	38000	6620
939	1.8	2	3	38000	6620
822	2.1	3	2	38000	6620
614	2.8	3	2	38000	6620
544	3.1	2	3	38000	6620
492	3.5	3	2	38000	6620
417	4.1	2	2	38000	6620
369	4.6	2	2	38000	6620
323	5.3	3	2	38000	6620
285	6.0	2	2	38000	6620
253	6.7	3	2	38000	6620
214	7.9	2	2	38000	6620
187	9.1	3	2	38000	6620
469	3.6	3	2	38000	6620
426	4.0	2	2	38000	6620
377	4.5	2	2	38000	6620
325	5.2	3	2	38000	6620
284	6.0	2	2	38000	6620
256	6.6	3	2	38000	6620
220	7.7	2	2	38000	6620
193	8.8	3	2	38000	6620
172	9.9	2	2	38000	6620

JRTR139/149R79, JRTR149R89, n_e=1700r/min



JRTR139R79				70700 lbf	in
i	n_a	Stage		M_{amax}	F_{Ra}
	[r/min]	R139	R79	lbf in	lbf
22203	0.08	3	3	70700	12000
18945	0.09	3	3	70700	12000
16566	0.10	3	3	70700	12000
14777	0.12	3	3	70700	12000
12921	0.13	3	3	70700	12000
11712	0.15	3	3	70700	12000
10573	0.16	3	3	70700	12000
8784	0.19	3	3	70700	12000
7479	0.23	3	3	70700	12000
6559	0.26	3	3	70700	12000
5834	0.29	3	3	70700	12000
5116	0.33	3	3	70700	12000
4464	0.38	2	3	70700	12000
3928	0.43	3	3	70700	12000
3454	0.49	2	3	70700	12000
2993	0.57	3	3	70700	12000
4709	0.36	2	3	70700	12000
4018	0.42	3	3	70700	12000
3514	0.48	2	3	70700	12000
3338	0.51	3	3	70700	12000
2929	0.58	2	3	70700	12000
2484	0.68	3	2	70700	12000
2242	0.76	2	3	70700	12000
1863	0.91	3	2	70700	12000
1586	1.1	2	3	70700	12000
1391	1.2	3	2	70700	12000
1256	1.4	2	3	70700	12000
1105	1.5	3	2	70700	12000
1043	1.6	3	2	70700	12000
888	1.9	2	3	70700	12000
699	2.4	3	2	70700	12000
609	2.8	2	3	70700	12000
2658	0.64	2	3	70700	12000
2412	0.70	3	2	70700	12000
2073	0.82	2	3	70700	12000
1839	0.92	3	2	70700	12000
1598	1.1	2	3	70700	12000
1397	1.2	3	2	70700	12000
1226	1.4	2	3	70700	12000
1090	1.6	3	2	70700	12000
951	1.8	3	2	70700	12000
831	2.0	2	3	70700	12000
730	2.3	3	2	70700	12000
629	2.7	2	3	70700	12000
560	3.0	2	2	70700	12000
490	3.5	3	2	70700	12000
428	4.0	2	2	70700	12000
381	4.5	3	2	70700	12000
323	5.3	2	2	70700	12000
291	5.8	3	2	70700	12000
255	6.7	3	2	70700	12000
223	7.6	2	2	70700	12000
197	8.6	2	2	70700	12000
175	9.7	3	2	70700	12000
564	3.0	2	2	70700	12000
517	3.3	3	2	70700	12000
453	3.8	3	2	70700	12000
376	4.5	3	2	70700	12000
339	5.0	3	2	70700	12000
297	5.7	3	2	70700	12000

JRTR149R79				115000 lbf	in
i	n_a	Stage		M_{amax}	F_{Ra}
	[r/min]	R149	R79	lbf in	lbf
23401	0.07	3	3	115000	14100
21342	0.08	3	3	115000	14100
18210	0.09	3	3	115000	14100
15923	0.11	3	3	115000	14100
14075	0.12	3	3	115000	14100
12344	0.14	3	3	115000	14100
11143	0.15	3	3	115000	14100
9743	0.17	3	3	115000	14100
8443	0.20	3	3	115000	14100
7307	0.23	3	3	115000	14100
6447	0.26	3	3	115000	14100
5568	0.31	3	3	115000	14100
4926	0.35	3	3	115000	14100
4325	0.39	3	3	115000	14100
3754	0.45	3	3	115000	14100
3302	0.51	3	3	115000	14100
2898	0.59	3	3	115000	14100
2555	0.67	3	2	115000	14100
2211	0.77	3	2	115000	14100
1951	0.87	3	2	115000	14100
1705	1.00	3	2	115000	14100
1536	1.1	3	2	115000	14100
1329	1.3	3	2	115000	14100
1166	1.5	3	2	115000	14100
1029	1.7	3	2	115000	14100
889	1.9	3	2	115000	14100
784	2.2	3	2	115000	14100
695	2.4	3	2	115000	14100
619	2.7	3	2	115000	14100
558	3.0	3	2	115000	14100
489	3.5	3	2	115000	14100
415	4.1	3	2	115000	14100

JRTR149R89				115000 lbf	in
i	n_a	Stage		M_{amax}	F_{Ra}
	[r/min]	R149	R89	lbf in	lbf
533	3.2	3	2	115000	14100
462	3.7	3	2	115000	14100
426	4.0	3	2	115000	14100
368	4.6	3	2	115000	14100
326	5.2	3	2	115000	14100
280	6.1	3	2	115000	14100
247	6.9	3	2	115000	14100
214	7.9	3	2	115000	14100
189	9.0	3	2	115000	14100
159	11	3	2	115000	14100

JRTR169R99, JRTR169R109 n_e=1700r/min



JRTR169R99				159200 lbf in	
i	n_a [r/min]	Stage R169	Stage R99	M_{amax} lbf in	F_{Ra} lbf
27001	0.06	3	3	159200	27000
22482	0.08	3	3	159200	27000
20002	0.08	3	3	159200	27000
17361	0.10	3	3	159200	27000
15446	0.11	3	3	159200	27000
14051	0.12	3	3	159200	27000
11812	0.14	3	3	159200	27000
10509	0.16	3	3	159200	27000
9631	0.18	3	3	159200	27000
7749	0.22	3	3	159200	27000
6894	0.25	3	3	159200	27000
6077	0.28	3	3	159200	27000
5407	0.31	3	3	159200	27000
4650	0.37	3	3	159200	27000
4129	0.41	3	3	159200	27000
3692	0.46	3	3	159200	27000
3099	0.55	3	3	159200	27000
2657	0.64	3	2	159200	27000
2333	0.73	3	2	159200	27000
2085	0.82	3	2	159200	27000
1877	0.91	3	2	159200	27000
1670	1.0	3	2	159200	27000
1438	1.2	3	2	159200	27000
1279	1.3	3	2	159200	27000
1123	1.5	3	2	159200	27000
999	1.7	3	2	159200	27000
861	2.0	3	2	159200	27000
760	2.2	3	2	159200	27000
656	2.6	3	2	159200	27000
579	2.9	3	2	159200	27000
503	3.4	3	2	159200	27000
432	3.9	3	2	159200	27000
376	4.5	3	2	159200	27000
335	5.1	3	2	159200	27000
303	5.6	3	2	159200	27000
279	6.1	3	2	159200	27000

JRTR169R109				159200 lbf in	
i	n_a [r/min]	Stage R169	Stage R109	M_{amax} lbf in	F_{Ra} lbf
3637	0.47	2	3	159200	27000
3330	0.51	2	3	159200	27000
2757	0.62	2	3	159200	27000
2436	0.70	2	3	159200	27000
2298	0.74	2	3	159200	27000
2066	0.82	2	3	159200	27000
1849	0.92	2	3	159200	27000
1674	1.0	2	3	159200	27000
1485	1.1	2	3	159200	27000
1342	1.3	2	3	159200	27000
1229	1.4	2	3	159200	27000
1111	1.5	2	3	159200	27000
950	1.8	2	3	159200	27000
860	2.0	2	3	159200	27000
763	2.2	2	3	159200	27000
690	2.5	2	3	159200	27000
585	2.9	2	3	159200	27000
511	3.3	2	3	159200	27000
349	4.9	2	2	159200	27000
295	5.8	2	2	159200	27000
270	6.3	2	2	159200	27000
229	7.4	3	2	159200	27000
200	8.5	2	2	159200	27000
169	10	3	2	159200	27000
446	3.8	2	2	159200	27000
399	4.3	3	2	159200	27000
361	4.7	2	2	159200	27000
328	5.2	3	2	159200	27000
291	5.8	2	2	159200	27000
264	6.4	3	2	159200	27000
227	7.5	2	2	159200	27000
198	8.6	3	2	159200	27000
168	10	2	2	159200	27000

5. Selection table

Selection table for gearmotor

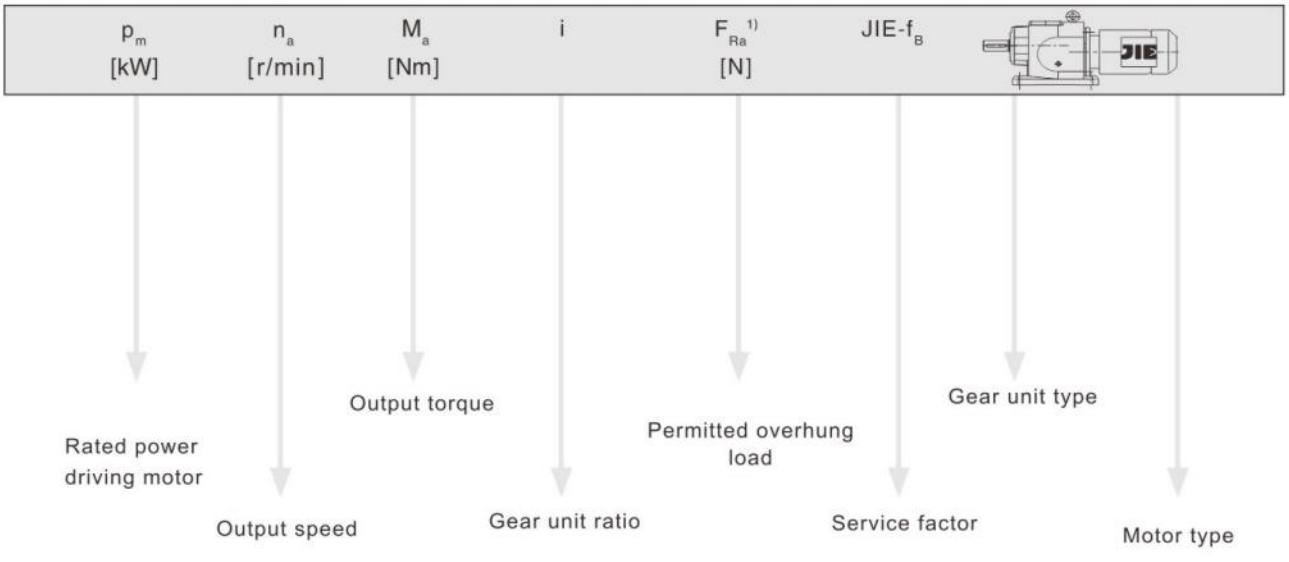

For particularly low output speeds

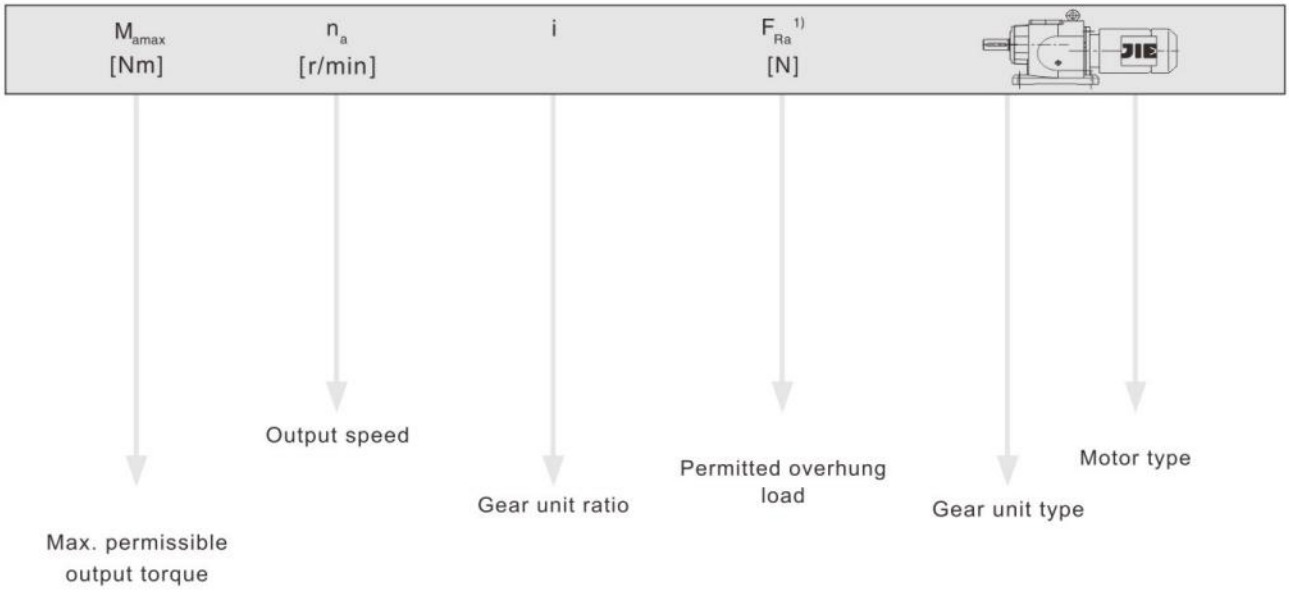

Legend

1)Overhung load specified for foot-mounted gear unit with solid shaft

Notice:

In drives with particularly low output speeds(multi-stage geared motors),the motor power must be limited according to the maximum permitted output torque of the gear unit.



Output speed n_a [r/min]	Output torque T_a lbf in	Ratio i	Permitted overhung load F_{Ra} [1] lbf	Service factor f_B	Model
0.16HP					
0.08	90900	21342	15100	1.25	
0.09	77600	18210	15600	1.50	
0.11	67800	15923	15900	1.70	
0.12	60000	14075	16100	1.90	
0.14	51500	12344	16300	2.2	JRTR149R79DN63S4
0.15	45000	11143	16400	2.6	JRTRF149R79DN63S4
0.17	40600	9743	16400	2.8	
0.20	31500	8443	16600	3.6	
0.23	27300	7307	16600	4.2	
0.26	24100	6447	16700	4.8	
0.30	20800	5568	16700	5.5	
0.13	55000	12921	12700	1.30	
0.14	48800	11712	13000	1.45	
0.16	42600	10573	13200	1.65	JRTR139R79DN63S4
0.19	32800	8784	13400	2.1	JRTRF139R79DN63S4
0.22	26200	7479	13600	2.7	
0.26	27300	6559	13500	2.6	
0.29	20400	5834	13700	3.5	
0.33	21300	5116	13600	3.3	
0.22	29000	7583	7640	1.30	
0.25	23600	6743	8070	1.60	
0.28	24600	5914	8000	1.55	JRTR109R79DN63S4
0.33	18100	5168	8250	2.1	JRTRF109R79DN63S4
0.38	16600	4435	8290	2.3	
0.43	14900	3896	8330	2.5	
0.55	12600	3039	8380	3.0	
0.43	16900	3918	8280	2.2	
0.50	14400	3343	8340	2.6	
0.55	13000	3034	8370	2.9	JRTR109R79DN63S4
0.63	11400	2653	8400	3.3	JRTRF109R79DN63S4
0.74	9830	2280	8430	3.9	
0.81	8730	2067	8440	4.4	
0.37	21100	4559	5540	1.25	
0.42	17400	4004	5650	1.50	
0.48	15500	3481	6120	1.70	
0.36	22700	4678	5330	1.15	
0.39	20900	4309	5570	1.25	JRTR99R59DN63S4
0.45	17900	3702	5900	1.50	JRTRF99R59DN63S4
0.56	14400	3019	6170	1.85	
0.63	12500	2668	6240	2.1	
0.75	10100	2245	6310	2.6	
0.83	8910	2016	6340	3.0	
0.97	8390	1733	6350	3.2	
0.55	14800	3065	6150	1.80	
0.62	13100	2722	6220	2.0	
0.73	11000	2311	6280	2.4	
0.81	9960	2078	6310	2.7	JRTR99R59DN63S4
0.92	8550	1823	6350	3.1	JRTRF99R59DN63S4
1.1	7420	1583	6370	3.6	
1.2	6170	1396	6390	4.3	
1.4	5230	1228	6410	5.1	
0.58	11800	2873	3490	1.15	JRTR89R59DN63S4
0.86	8980	1961	4440	1.55	JRTRF89R59DN63S4

Output speed n_a [r/min]	Output torque T_a lbf in	Ratio i	Permitted overhung load F_{Ra} [1] lbf	Service factor f_B	Model
0.16HP					
0.65	12400	2595	4010	1.10	
0.79	9870	2129	4350	1.40	JRTR89R59DN63S4
0.87	8740	1930	4470	1.55	JRTRF89R59DN63S4
0.97	7660	1733	4490	1.80	
0.97	7870	1737	4490	1.75	
1.1	6900	1524	4490	2.0	
1.3	5450	1303	4490	2.5	
1.5	4780	1143	4490	2.9	JRTR89R59DN63S4
1.9	4010	885	4490	3.4	JRTRF89R59DN63S4
2.2	3510	776	4490	3.9	
2.5	3100	685	4490	4.4	
2.8	2390	599	4490	5.7	
1.3	6620	1303	2370	1.10	
1.5	5610	1124	2550	1.30	JRTR79R39DN63S4
1.6	5190	1047	2610	1.40	JRTRF79R39DN63S4
1.8	4460	915	2710	1.65	
1.4	5670	1218	2540	1.30	
1.6	5140	1084	2620	1.40	
1.8	4650	940	2690	1.55	JRTR79R39DN63S4
2.0	3540	821	2810	2.0	JRTRF79R39DN63S4
2.3	3260	731	2830	2.2	
2.6	3230	646	2830	2.2	
3.2	2670	520	2870	2.7	
3.7	2280	451	2900	3.2	JRTR79R39DN63S4
4.0	2110	422	2910	3.4	JRTRF79R39DN63S4
4.6	1790	365	2920	4.0	
1.9	4410	891	1930	1.20	
2.3	3520	730	2100	1.50	
2.6	3050	644	2170	1.75	JRTR69R39DN63S4
2.9	2660	571	2220	2.0	JRTRF69R39DN63S4
3.5	2190	486	2270	2.4	
2.0	4140	836	1990	1.30	
2.2	3390	750	2120	1.55	
2.6	3060	646	2170	1.75	JRTR69R39DN63S4
2.9	2790	574	2200	1.90	JRTRF69R39DN63S4
3.4	2410	495	2250	2.2	
3.8	1950	438	2290	2.7	
2.5	3150	678	1680	1.25	
2.8	2860	604	1700	1.40	
3.1	2610	537	1720	1.50	JRTR59R39DN63S4
3.6	2290	471	1740	1.75	JRTRF59R39DN63S4
4.7	1690	357	1770	2.4	
5.3	1480	319	1780	2.7	
4.7	1810	359	1760	2.2	
5.2	1640	324	1770	2.4	
5.8	1430	290	1780	2.8	JRTR59R39DN63S4
6.4	1290	262	1780	3.1	JRTRF59R39DN63S4
6.8	1180	246	1790	3.4	
7.6	1030	220	1790	3.8	
3.3	2370	510	1250	1.10	
3.9	1970	436	1300	1.35	JRTR49R39DN63S4
4.1	1820	408	1310	1.45	JRTRF49R39DN63S4
4.9	1480	344	1340	1.80	

Output speed n_a [r/min]	Output torque T_a lbf in	Ratio i	Permitted overhung load F_{Ra} [1] lbf	Service factor f_B	Model
0.16HP					
3.9	2200	429	1270	1.20	JRTR49R39DN63S4 JRTRF49R39DN63S4
4.5	1880	372	1310	1.40	
4.8	1740	348	1320	1.50	
5.6	1480	301	1340	1.80	
6.6	1220	255	1350	2.2	
7.4	1070	228	1360	2.5	
8.6	890	195	1370	3.0	
5.0	1560	338	1100	1.15	JRTR39R19DN63S4 JRTRF39R19DN63S4
5.7	1490	296	1150	1.20	
6.5	1290	259	1240	1.35	
7.4	1140	228	1270	1.55	
8.4	980	199	1290	1.80	
9.8	860	172	1310	2.0	
5.1	1670	328	1020	1.05	JRTR39R19DN63S4 JRTRF39R19DN63S4
5.8	1430	289	1190	1.25	
6.3	1350	265	1220	1.30	
7.4	1080	226	1280	1.65	
8.3	1000	202	1290	1.75	
9.4	870	179	1310	2.0	
8.4	960	200	900	1.20	JRTR29R19DN63S4 JRTRF29R19DN63S4
9.5	830	177	920	1.35	
10	810	166	920	1.40	
7.4	1080	227	840	1.05	JRTR29R19DN63S4 JRTRF29R19DN63S4
8.3	1000	203	890	1.15	
9.4	870	179	910	1.30	
11	725	156	930	1.60	
5.6	1780	195.24	2920	4.1	JRTR79DN63S4 JRTRF79DN63S4
6.6	1520	166.59	2920	4.8	
7.5	1330	145.67	2920	5.4	
5.5	1830	199.81	2300	2.9	JRTR69DN63M6 JRTRF69DN63M6
6.0	1680	184.07	2310	3.1	
7.0	1440	158.14	2330	3.7	
8.0	1260	137.67	2340	4.2	
8.5	1180	128.97	2340	4.5	
9.7	1040	113.94	2350	5.1	
8.4	1190	199.81	2340	4.4	JRTR69DN63S4
9.1	1100	184.07	2340	4.8	JRTRF69DN63S4
5.9	1710	186.89	1770	2.3	JRTR59DN63M4 JRTRF59DN63M4
6.4	1570	172.17	1770	2.5	
7.4	1350	147.92	1780	2.9	
8.5	1170	128.77	1790	3.4	
9.1	1100	120.63	1790	3.6	
10	970	106.58	1790	4.1	
11	900	98.99	1790	4.4	
9.0	1120	186.89	1790	3.5	JRTR59DN63S4 JRTRF59DN63S4
9.8	1030	172.17	1790	3.9	
11	880	147.92	1790	4.5	
13	770	128.77	1800	5.2	
6.2	1620	176.88	1330	1.65	JRTR49DN63M6 JRTRF49DN63M6
6.8	1490	162.94	1340	1.80	
7.9	1280	139.99	1350	2.1	
9.0	1110	121.87	1360	2.4	

Output speed n_a [r/min]	Output torque T_a lbf in	Ratio i	Permitted overhung load F_{Ra} [1] lbf	Service factor f_B	Model
0.16HP					
9.5	1060	176.88	1360	2.5	JRTR49DN63S4 JRTRF49DN63S4
10	970	162.94	1370	2.7	
12	830	139.99	1370	3.2	
14	730	121.87	1380	3.6	
15	685	114.17	1380	3.9	
17	605	100.86	1380	4.4	
18	560	93.68	1380	4.7	
8.2	1230	134.82	1250	1.45	JRTR39DN63M6 JRTRF39DN63M6
8.9	1130	123.66	1270	1.55	
10	960	105.28	1300	1.85	
12	830	90.77	1310	2.1	
13	775	84.61	1320	2.3	
15	675	73.96	1330	2.6	
12	800	134.82	1320	2.2	JRTR39DN63S4 JRTRF39DN63S4
14	740	123.66	1320	2.4	
16	630	105.28	1340	2.8	
19	540	90.77	1340	3.2	
20	505	84.61	1350	3.5	
23	440	73.96	1350	4.0	
10	960	105.49	900	1.20	JRTR29DN63M6 JRTRF29DN63M6
12	830	90.96	920	1.40	
13	775	84.78	920	1.50	
15	675	74.11	940	1.70	
12	810	135.09	920	1.40	JRTR29DN63S4 JRTRF29DN63S4
14	740	123.91	930	1.55	
16	630	105.49	940	1.80	
18	545	90.96	950	2.1	
20	505	84.78	960	2.3	
23	440	74.11	960	2.6	
24	415	69.47	970	2.8	
27	365	61.30	930	3.1	
30	335	55.87	910	3.4	
35	285	48.17	870	4.0	
37	265	44.90	850	4.3	
16	645	70.39	535	1.15	JRTR19DN63M6 JRTRF19DN63M6
17	600	65.61	545	1.25	
19	525	57.35	560	1.45	
20	490	53.76	560	1.55	
23	430	47.44	560	1.75	
21	485	81.64	560	1.55	JRTR19DN63S4 JRTRF19DN63S4
24	420	70.39	560	1.80	
26	390	65.61	560	1.90	
29	340	57.35	560	2.2	
31	320	53.76	560	2.3	
35	280	47.44	550	2.6	
38	265	44.18	535	2.8	
44	230	38.61	520	3.2	
46	215	36.20	510	3.5	
53	192	31.94	490	3.9	
59	170	28.32	475	4.4	
70	144	24.07	450	5.2	



Output speed n_a [r/min]	Output torque T_a lbf in	Ratio i	Permitted overhung load F_{Ra} [1] lbf	Service factor f_B	Model
0.16HP					
277	36	6.07	900	10	
325	31	5.18	850	21	JRTRX69DN63S4
371	27	4.53	820	27	JRTRXF69DN63S4
391	26	4.30	800	27	
305	33	5.50	710	10	
332	30	5.07	690	10	
386	26	4.35	655	23	
443	23	3.79	625	27	
473	21	3.55	615	29	
536	19	3.14	590	31	JRTRX59DN63S4
577	18	2.91	575	34	JRTRXF59DN63S4
636	16	2.64	555	39	
709	14	2.37	535	43	
823	12	2.04	510	50	
875	12	1.92	500	53	
1015	9.9	1.65	475	62	
0.25HP					
0.12	102800	14075	14700	1.10	
0.14	89000	12344	15200	1.30	
0.15	78800	11143	15600	1.45	
0.17	70200	9743	15800	1.65	
0.20	57200	8443	16100	2.0	
0.23	49500	7307	16300	2.3	JRTR149R79DN63M4
0.26	43700	6447	16400	2.6	JRTRF149R79DN63M4
0.31	37700	5568	16500	3.0	
0.35	34800	4926	16500	3.3	
0.39	29700	4325	16600	3.9	
0.45	26500	3754	16600	4.3	
0.51	22600	3302	16700	5.1	
0.19	59500	8784	12500	1.20	
0.23	48900	7479	13000	1.45	
0.26	47300	6559	13000	1.50	JRTR139R79DN63M4
0.29	38200	5834	13300	1.85	JRTRF139R79DN63M4
0.33	36900	5116	13300	1.90	
0.38	30200	4464	13500	2.3	
0.43	26600	3928	13600	2.7	
0.36	34800	4709	13400	2.0	
0.42	29700	4018	13500	2.4	JRTR139R79DN63M4
0.48	25900	3514	13600	2.7	JRTRF139R79DN63M4
0.51	24600	3338	13600	2.9	
0.58	21600	2929	13600	3.3	
0.38	30000	4435	7540	1.25	JRTR109R79DN63M4
0.44	26700	3896	7830	1.40	JRTRF109R79DN63M4
0.56	21900	3039	8130	1.75	
0.43	28900	3918	7640	1.30	
0.51	24700	3343	7990	1.55	
0.56	22400	3034	8120	1.70	JRTR109R79DN63M4
0.64	19600	2653	8210	1.95	JRTRF109R79DN63M4
0.75	16800	2280	8280	2.3	
0.82	15000	2067	8330	2.5	
0.86	14200	1987	8350	2.7	JRTR109R79DN63M4
0.93	12500	1827	8380	3.0	JRTRF109R79DN63M4

Output speed n_a [r/min]	Output torque T_a lbf in	Ratio i	Permitted overhung load F_{Ra} [1] lbf	Service factor f_B	Model
0.25HP					
1.1	10600	1599	8420	3.6	
1.2	9610	1400	8430	4.0	JRTR109R79DN63M4
1.4	8120	1226	8450	4.7	JRTRF109R79DN63M4
0.64	20700	2668	5590	1.30	
0.76	17000	2245	5990	1.55	
0.84	15100	2016	6140	1.75	
0.98	13700	1733	6200	1.95	
1.1	12700	1623	6230	2.1	JRTR99R59DN63M4
1.2	11100	1434	6280	2.4	JRTRF99R59DN63M4
1.4	9180	1207	6330	2.9	
1.6	8130	1084	6360	3.3	
1.8	6840	934	6380	3.9	
1.9	6370	878	6390	4.2	
2.2	5340	755	6410	5.0	
0.62	21500	2722	4430	1.25	JRTR99R59DN63M4
0.74	18100	2311	5440	1.45	JRTRF99R59DN63M4
0.82	16300	2078	5990	1.60	
1.1	11700	1489	4110	1.15	
1.2	10900	1395	4220	1.25	
1.4	9570	1232	4380	1.45	JRTR89R59DN63M4
1.5	8830	1145	4460	1.55	JRTRF89R59DN63M4
1.6	7890	1037	4490	1.75	
1.8	6980	931	4490	1.95	
2.1	5880	802	4490	2.3	
1.1	11500	1524	3590	1.20	
1.3	9460	1303	4380	1.45	JRTR89R59DN63M4
1.5	8300	1143	4490	1.65	JRTRF89R59DN63M4
1.9	6730	885	4490	2.0	
2.2	5900	776	4490	2.3	
2.0	6780	858	2330	1.05	
2.2	5920	757	2500	1.20	JRTR79R39DN63M4
2.5	5190	671	2610	1.40	JRTRF79R39DN63M4
3.0	4330	571	2720	1.65	
2.1	6070	821	2470	1.20	
2.3	5510	731	2560	1.30	
2.6	5220	646	2610	1.40	
3.0	4520	560	2700	1.60	JRTR79R39DN63M4
3.5	3810	488	2780	1.90	JRTRF79R39DN63M4
3.9	3370	436	2820	2.1	
4.6	2910	373	2860	2.5	
5.2	2550	327	2880	2.8	
5.9	2290	289	2900	3.2	
3.0	4410	571	1930	1.20	JRTR69R39DN63M4
3.5	3690	486	2070	1.45	JRTRF69R39DN63M4
3.0	4560	574	1900	1.15	
3.4	3930	495	2030	1.35	
3.9	3300	438	2130	1.60	JRTR69R39DN63M4
4.4	2920	388	2190	1.80	JRTRF69R39DN63M4
4.9	2730	344	2210	1.95	
5.8	2170	294	2270	2.4	
6.5	2010	261	2280	2.6	
3.7	3450	454	1650	1.15	JRTR59R39DN63M4
4.2	3110	410	1680	1.30	JRTRF59R39DN63M4
3.6	3740	471	1620	1.05	
4.8	2790	357	1700	1.40	
5.3	2460	319	1730	1.60	JRTR59R39DN63M4
6.2	2070	273	1750	1.90	JRTRF59R39DN63M4
7.1	1780	241	1760	2.2	
7.9	1590	215	1770	2.5	

Output speed n_a [r/min]	Output torque T_a lbf in	Ratio i	Permitted overhung load F_{Ra} [1] lbf	Service factor f_B	Model
0.25HP					
4.7	2930	359	1690	1.35	JRTR59R39DN63M4 JRTRF59R39DN63M4
5.2	2650	324	1710	1.50	
5.9	2330	290	1730	1.70	
6.5	2100	262	1750	1.90	
6.9	1950	246	1760	2.0	
7.7	1720	220	1770	2.3	
9.0	1440	188	1780	2.8	
11	1210	159	1780	3.3	
5.7	2410	301	1250	1.10	JRTR49R39DN63M4 JRTRF49R39DN63M4
6.7	2020	255	1290	1.30	
7.5	1780	228	1310	1.50	
8.7	1490	195	1340	1.75	
8.5	1590	199	1080	1.10	JRTR39R19DN63M4 JRTRF39R19DN63M4
9.9	1390	172	1220	1.25	
11	1200	150	1250	1.45	
8.4	1630	202	1050	1.10	JRTR39R19DN63M4 JRTRF39R19DN63M4
9.5	1420	179	1200	1.25	
11	1210	156	1250	1.45	
12	1080	141	840	1.05	JRTR29R19DN63M4 JRTRF29R19DN63M4
14	950	124	900	1.20	
15	860	110	910	1.35	
18	720	94	930	1.60	
13	1050	135	860	1.10	JRTR29R19DN63M4 JRTRF29R19DN63M4
14	970	118	900	1.20	
16	840	104	920	1.35	
19	725	90	930	1.60	
8.7	1810	195.24	2920	4.0	JRTR79DN63M4 JRTRF79DN63M4
10	1540	166.59	2920	4.7	
12	1350	145.67	2920	5.4	
12	1280	138.39	2920	5.7	
5.5	2870	195.24	2860	2.5	JRTR79DN71S6 JRTRF79DN71S6
6.4	2450	166.59	2890	3.0	
7.3	2140	145.67	2910	3.4	
7.7	2030	138.39	2910	3.6	
8.8	1780	121.42	2920	4.1	
8.5	1850	199.81	2300	2.9	JRTR69DN63M4 JRTRF69DN63M4
9.2	1700	184.07	2310	3.1	
11	1460	158.14	2330	3.6	
12	1270	137.67	2340	4.2	
13	1190	128.97	2340	4.4	
15	1050	113.94	2350	5.0	
16	980	105.83	2350	5.4	
5.4	2940	199.81	2190	1.80	JRTR69DN71S6 JRTRF69DN71S6
5.8	2710	184.07	2210	1.95	
6.8	2320	158.14	2260	2.3	
7.8	2020	137.67	2280	2.6	
8.3	1900	128.97	2290	2.8	
9.4	1670	113.94	2310	3.2	
10	1550	105.83	2320	3.4	
11	1410	95.91	2330	3.8	
12	1260	86.11	2340	4.2	
14	1090	74.17	2340	4.9	
15	1020	69.75	2350	5.2	
9.1	1730	186.89	1770	2.3	JRTR59DN63M4 JRTRF59DN63M4
9.9	1590	172.17	1770	2.5	
11	1370	147.92	1780	2.9	
13	1190	128.77	1790	3.3	
14	1110	120.63	1790	3.6	

Output speed n_a [r/min]	Output torque T_a lbf in	Ratio i	Permitted overhung load F_{Ra} [1] lbf	Service factor f_B	Model
0.25HP					
16	980	106.58	1790	4.0	JRTR59DN63M4 JRTRF59DN63M4
17	910	98.99	1790	4.3	
19	830	89.71	1790	4.8	
5.7	2750	186.89	1710	1.45	JRTR59DN71S6 JRTRF59DN71S6
6.2	2530	172.17	1720	1.55	
7.2	2170	147.92	1740	1.85	
8.3	1890	128.77	1760	2.1	
8.9	1770	120.63	1760	2.2	
9.6	1640	176.88	1330	1.60	JRTR49DN63M4 JRTRF49DN63M4
10	1510	162.94	1340	1.75	
12	1290	139.99	1350	2.0	
14	1130	121.87	1360	2.4	
15	1050	114.17	1360	2.5	
17	930	100.86	1370	2.8	
18	860	93.68	1370	3.1	
20	785	84.90	1370	3.4	
22	705	76.23	1380	3.8	
13	1250	134.82	1250	1.40	JRTR39DN63M4 JRTRF39DN63M4
14	1140	123.66	1270	1.55	
16	970	105.28	1290	1.80	
19	840	90.77	1310	2.1	
20	780	84.61	1320	2.3	
23	685	73.96	1330	2.6	
25	640	69.33	1340	2.8	
28	565	61.18	1330	3.1	
30	515	55.76	1300	3.4	
35	445	48.08	1240	4.0	
10	1550	105.28	1110	1.15	JRTR39DN71S6 JRTRF39DN71S6
12	1330	90.77	1230	1.30	
13	1240	84.61	1250	1.40	
14	1140	123.91	795	1.00	JRTR29DN63M4 JRTRF29DN63M4
16	970	105.49	900	1.20	
19	840	90.96	920	1.35	
20	785	84.78	920	1.45	
23	685	74.11	930	1.65	
24	640	69.47	930	1.80	
28	565	61.30	900	2.0	
30	515	55.87	880	2.2	
35	445	48.17	840	2.6	
38	415	44.90	830	2.8	
43	360	39.25	795	3.2	
46	340	36.79	780	3.4	
52	300	32.47	750	3.8	
59	265	28.78	725	4.3	
69	225	24.47	690	5.1	
60	260	28.37	720	4.4	JRTR29DN63M4 JRTRF29DN63M4
65	240	26.09	700	4.8	
76	205	22.32	670	5.6	
88	179	19.35	640	6.4	
94	168	18.08	625	6.9	
109	145	15.63	600	7.9	
128	123	13.28	570	9.3	
21	755	81.64	390	1.00	JRTR19DN63M4 JRTRF19DN63M4
24	650	70.39	535	1.15	
26	605	65.61	540	1.25	
30	530	57.35	540	1.40	
32	495	53.76	530	1.50	
36	435	47.44	515	1.70	
38	405	44.18	510	1.85	



Output speed n_a [r/min]	Output torque T_a lbf in	Ratio i	Permitted overhung load F_{Ra} [1] lbf	Service factor f_B	Model
0.25HP					
44	355	38.61	490	2.1	
47	335	36.20	485	2.2	JRTR19DN63M4
53	295	31.94	470	2.5	JRTRF19DN63M4
60	260	28.32	455	2.9	
71	220	24.07	435	3.4	
67	230	25.23	440	3.2	JRTR19DN63M4
73	210	23.15	430	3.5	JRTRF19DN63M4
86	183	19.71	410	4.1	
100	158	16.99	395	4.8	
280	56	6.07	890	6.8	
328	48	5.18	850	14	
376	42	4.53	810	17	
395	40	4.30	795	18	
451	35	3.77	765	22	JRTRX69DN63M4
531	30	3.20	725	30	JRTRXF69DN63M4
588	27	2.89	700	35	
669	24	2.54	670	44	
708	22	2.40	655	49	
832	19	2.04	625	63	
309	51	5.50	705	6.8	
336	47	5.07	685	6.8	
391	40	4.35	650	15	
449	35	3.79	620	17	
479	33	3.55	610	19	JRTRX59DN63M4
542	29	3.14	585	20	JRTRXF59DN63M4
584	27	2.91	570	22	
644	25	2.64	555	25	
717	22	2.37	535	28	
833	19	2.04	510	32	
885	18	1.92	500	34	
1030	15	1.65	475	40	
0.33HP					
0.17	97100	9743	14900	1.20	
0.20	80500	8443	15500	1.45	
0.23	69700	7307	15800	1.65	
0.26	61500	6447	16000	1.85	JRTR149R79DN71S4
0.31	53100	5568	16200	2.2	JRTRF149R79DN71S4
0.35	48400	4926	16300	2.4	
0.39	41600	4325	16400	2.8	
0.45	36900	3754	16500	3.1	
0.51	31800	3302	16600	3.6	
0.59	27600	2898	16600	4.2	
0.29	54300	5834	12800	1.30	
0.33	51000	5116	12900	1.40	JRTR139R79DN71S4
0.38	42600	4464	13200	1.65	JRTRF139R79DN71S4
0.43	37400	3928	13300	1.90	
0.36	47900	4709	13000	1.45	
0.42	40900	4018	13200	1.75	JRTR139R79DN71S4
0.48	35800	3514	13400	2.0	JRTRF139R79DN71S4
0.51	34000	3338	13400	2.1	
0.58	29800	2929	13500	2.4	
0.64	26800	2658	13600	2.6	
0.70	24300	2412	13600	2.9	
0.82	20900	2073	13600	3.4	JRTR139R79DN71S4
0.92	17700	1839	13700	4.0	JRTRF139R79DN71S4
1.2	13900	1397	13700	5.1	
1.4	11900	1226	13800	5.9	

Output speed n_a [r/min]	Output torque T_a lbf in	Ratio i	Permitted overhung load F_{Ra} [1] lbf	Service factor f_B	Model
0.33HP					
0.56	30300	3039	7520	1.25	
0.86	19700	1987	8200	1.90	
0.93	17600	1827	8260	2.2	JRTR109R79DN71S4
1.1	15000	1599	8330	2.5	JRTRF109R79DN71S4
1.2	13500	1400	8360	2.8	
1.4	11500	1226	8400	3.3	
1.8	9060	939	8440	4.2	
2.1	7740	822	8450	4.9	
0.98	18500	1733	5840	1.45	
1.1	17300	1623	5970	1.55	
0.93	19200	1823	5120	1.40	
1.1	16700	1583	5880	1.60	
1.2	14300	1396	6170	1.85	JRTR99R59DN71S4
1.4	12400	1228	6240	2.1	JRTRF99R59DN71S4
1.6	11400	1069	6270	2.3	
1.8	9900	938	6320	2.7	
2.1	8350	824	6350	3.2	
2.3	7460	737	6370	3.5	
2.7	6400	632	6390	4.2	
1.5	12000	1145	4070	1.15	
1.6	10700	1037	4240	1.25	JRTR89R59DN71S4
1.8	9580	931	4380	1.45	JRTRF89R59DN71S4
2.1	8120	802	4490	1.70	
1.5	11400	1143	3630	1.20	
1.9	9200	885	4420	1.50	
2.2	8070	776	4490	1.70	
2.5	7120	685	4490	1.90	JRTR89R59DN71S4
2.8	5900	599	4490	2.3	JRTRF89R59DN71S4
3.2	5180	525	4490	2.6	
3.7	4580	456	4490	3.0	
6.3	2640	268	4490	5.2	
3.0	5930	571	2500	1.20	JRTR79R39DN71S4 JRTRF79R39DN71S4
3.0	6080	560	2470	1.20	
3.5	5180	488	2610	1.40	
3.9	4580	436	2690	1.60	JRTR79R39DN71S4
4.6	3950	373	2770	1.85	JRTRF79R39DN71S4
5.2	3460	327	2810	2.1	
5.9	3090	289	2840	2.3	
6.5	2750	260	2870	2.6	
7.6	2280	224	2900	3.2	
4.4	4010	388	2010	1.30	
4.9	3690	344	2070	1.45	
5.8	2990	294	2180	1.75	JRTR69R39DN71S4
6.5	2740	261	2210	1.95	JRTRF69R39DN71S4
7.3	2460	234	2240	2.1	
8.5	2070	200	2280	2.5	
9.7	1790	176	2300	3.0	
11	1600	158	2320	3.3	
4.4	4220	384	1970	1.25	
4.7	3930	359	2030	1.35	
5.5	3370	310	2120	1.55	JRTR69R39DN71S4
6.5	2830	264	2200	1.85	JRTRF69R39DN71S4
7.2	2500	235	2240	2.1	
8.5	2110	201	2280	2.5	
9.4	1900	181	2290	2.8	
5.3	3360	319	1660	1.20	
6.2	2830	273	1700	1.40	
7.1	2450	241	1730	1.60	JRTR59R39DN71S4
7.9	2190	215	1740	1.80	JRTRF59R39DN71S4
9.1	1940	187	1760	2.0	
10	1670	164	1770	2.4	
12	1460	142	1780	2.7	

Output speed n_a [r/min]	Output torque T_a lbf in	Ratio i	Permitted overhung load F_{Ra} [1] lbf	Service factor f_B	Model
0.33HP					
5.2	3560	324	1640	1.10	
5.9	3150	290	1680	1.25	JRTR59R39DN71S4
6.5	2840	262	1700	1.40	JRTRF59R39DN71S4
6.9	2640	246	1710	1.50	
7.7	2340	220	1730	1.70	
7.5	2420	228	1250	1.10	
8.7	2040	195	1290	1.30	JRTR49R39DN71S4
9.3	1900	182	1300	1.40	JRTRF49R39DN71S4
11	1580	154	1330	1.70	
11	1620	150	1060	1.10	
13	1370	130	1220	1.30	JRTR39R19DN71S4
14	1300	124	1230	1.35	JRTRF39R19DN71S4
15	1150	110	1260	1.55	
18	980	94	1290	1.80	
13	1420	135	1200	1.25	
13	1390	127	1210	1.25	JRTR39R19DN71S4
16	1130	104	1270	1.55	JRTRF39R19DN71S4
19	980	90	1290	1.80	
5.6	3690	195.24	2790	1.95	JRTR79R19DN71M6
6.6	3150	166.59	2840	2.3	JRTRF79R19DN71M6
7.5	2750	145.67	2870	2.6	
8.7	2380	195.24	2890	3.0	
10	2030	166.59	2910	3.6	JRTR79R19DN71S4
12	1780	145.67	2920	4.1	JRTRF79R19DN71S4
12	1690	138.39	2920	4.3	
14	1480	121.42	2920	4.9	
5.5	3770	199.81	2060	1.40	
6.0	3480	184.07	2110	1.50	
7.0	2990	158.14	2180	1.75	JRTR69R19DN71M6
8.0	2600	137.67	2230	2.0	JRTRF69R19DN71M6
8.5	2430	128.97	2240	2.2	
9.7	2150	113.94	2270	2.5	
10	2000	105.83	2290	2.6	
8.5	2440	199.81	2240	2.2	
9.2	2250	184.07	2260	2.4	
11	1930	158.14	2290	2.7	
12	1680	137.67	2310	3.1	JRTR69R19DN71S4
13	1570	128.97	2320	3.4	JRTRF69R19DN71S4
15	1390	113.94	2330	3.8	
16	1290	105.83	2330	4.1	
18	1170	95.91	2340	4.5	
20	1050	86.11	2350	5.0	
5.9	3530	186.89	1640	1.15	
6.4	3250	172.17	1670	1.20	
7.4	2790	147.92	1700	1.40	JRTR59R19DN71M6
8.5	2430	128.77	1730	1.65	JRTRF59R19DN71M6
9.1	2280	120.63	1740	1.75	
10	2010	106.58	1750	1.95	
11	1870	98.99	1760	2.1	
9.1	2280	186.89	1740	1.75	
9.9	2100	172.17	1750	1.90	
11	1810	147.92	1760	2.2	
13	1570	128.77	1770	2.5	JRTR59R19DN71S4
14	1470	120.63	1780	2.7	JRTRF59R19DN71S4
16	1300	106.58	1780	3.0	
17	1210	98.99	1790	3.3	
19	1090	89.71	1790	3.6	
21	980	80.55	1790	4.0	
25	840	69.23	1770	4.7	

Output speed n_a [r/min]	Output torque T_a lbf in	Ratio i	Permitted overhung load F_{Ra} [1] lbf	Service factor f_B	Model
0.33HP					
9.6	2160	176.88	1280	1.25	
10	1990	162.94	1290	1.35	
12	1710	139.99	1320	1.55	
14	1490	121.87	1340	1.80	
15	1390	114.17	1340	1.90	
17	1230	100.86	1350	2.1	JRTR49DN71S4
18	1140	93.68	1360	2.3	JRTRF49DN71S4
20	1030	84.90	1360	2.5	
22	930	76.23	1370	2.8	
25	830	68.54	1370	3.2	
26	785	64.21	1370	3.4	
30	690	56.73	1330	3.8	
32	640	52.69	1300	4.1	
36	580	47.75	1260	4.5	
13	1650	134.82	1040	1.05	
14	1510	123.66	1140	1.15	
16	1280	105.28	1240	1.35	
19	1110	90.77	1270	1.60	
20	1030	84.61	1280	1.70	
23	900	73.96	1300	1.95	
25	840	69.33	1310	2.1	JRTR39DN71S4
28	745	61.18	1310	2.4	JRTRF39DN71S4
30	680	55.76	1280	2.6	
35	585	48.08	1220	3.0	
38	545	44.81	1200	3.2	
43	475	39.17	1150	3.7	
46	445	36.72	1130	3.9	
52	395	32.40	1090	4.5	
20	1030	84.78	870	1.10	
23	900	74.11	910	1.25	
24	850	69.47	910	1.35	
28	750	61.30	880	1.55	
30	680	55.87	860	1.70	JRTR29DN71S4
35	585	48.17	820	1.95	JRTRF29DN71S4
38	545	44.90	810	2.1	
43	480	39.25	780	2.4	
46	450	36.79	765	2.5	
52	395	32.47	740	2.9	
59	350	28.78	715	3.3	
69	295	24.47	680	3.8	
60	345	28.37	710	3.3	
65	315	26.09	695	3.6	
76	270	22.32	660	4.2	
88	235	19.35	635	4.9	
94	220	18.08	620	5.2	
109	191	15.63	595	6.0	
128	163	13.28	565	7.1	
143	145	11.86	545	7.9	
168	124	10.13	520	8.7	JRTR29DN71S4
181	115	9.41	505	9.4	JRTRF29DN71S4
208	100	8.16	485	10	
223	93	7.63	475	11	
258	81	6.59	450	12	
304	69	5.60	430	13	
340	61	5.00	415	14	
398	52	4.27	395	15	
425	49	4.00	385	15	
505	41	3.37	365	17	



Output speed n_a [r/min]	Output torque T_a lbf in	Ratio i	Permitted overhung load F_{Ra} [1] lbf	Service factor f_B	Model
0.33HP					
30	700	57.35	470	1.05	
32	655	53.76	500	1.15	
36	580	47.44	490	1.30	
38	540	44.18	485	1.40	JRTR19DN71S4
44	470	38.61	470	1.60	JRTRF19DN71S4
47	440	36.20	465	1.70	
53	390	31.94	450	1.90	
60	345	28.32	440	2.2	
71	290	24.07	420	2.5	
167	124	19.71	335	6.0	
194	107	16.99	320	7.0	
208	100	15.84	315	7.5	
238	87	13.84	300	8.6	
254	82	12.98	295	9.2	
288	72	11.45	285	9.9	
325	64	10.15	275	11	JRTR19DN63M2
382	54	8.63	260	12	JRTRF19DN63M2
437	48	7.55	250	10	
469	44	7.04	245	11	
537	39	6.15	235	12	
572	36	5.76	230	13	
649	32	5.09	220	14	
732	28	4.51	210	15	
861	24	3.83	200	16	
67	305	25.23	425	2.4	
73	280	23.15	420	2.6	
86	240	19.71	400	3.1	
100	205	16.99	385	3.6	JRTR19DN71S4
107	194	15.84	380	3.9	JRTRF19DN71S4
123	169	13.84	365	4.4	
131	159	12.98	360	4.7	
148	140	11.45	345	5.1	
280	74	6.07	890	5.1	
328	63	5.18	840	10	
376	55	4.53	810	13	
395	53	4.30*	795	13	
451	46	3.77	760	17	JRTRX69DN71S4
531	39	3.20*	720	23	JRTRXF69DN71S4
588	35	2.89	695	27	
669	31	2.54	670	34	
708	29	2.40*	655	37	
832	25	2.04	620	47	
309	67	5.50*	700	5.1	
336	62	5.07	680	5.1	
391	53	4.35	650	11	
449	46	3.79	620	13	
479	43	3.55*	605	14	
542	38	3.14	585	15	JRTRX59DN71S4
584	36	2.91	570	17	JRTRXF59DN71S4
644	32	2.64*	550	19	
717	29	2.37	530	21	
833	25	2.04	505	24	
885	24	1.92*	495	26	
1030	20	1.65	475	30	
0.50HP					
0.23	112500	7307	14200	1.00	
0.26	99300	6447	14800	1.15	JRTR149R79DN71M4
0.31	85700	5568	15300	1.35	JRTRF149R79DN71M4
0.35	77300	4926	15600	1.50	

Output speed n_a [r/min]	Output torque T_a lbf in	Ratio i	Permitted overhung load F_{Ra} [1] lbf	Service factor f_B	Model
0.50HP					
0.39	67000	4325	15900	1.70	
0.45	58900	3754	16100	1.95	JRTR149R79DN71M4
0.51	51100	3302	16300	2.2	JRTRF149R79DN71M4
0.59	44600	2898	16400	2.6	
0.38	68700	4464	12100	1.05	JRTR139R79DN71M4
0.43	60500	3928	12500	1.15	JRTRF139R79DN71M4
0.42	64800	4018	12300	1.10	
0.48	56600	3514	12700	1.25	
0.51	53800	3338	12800	1.30	JRTR139R79DN71M4
0.58	47200	2929	13000	1.50	JRTRF139R79DN71M4
0.68	39800	2484	13300	1.80	
0.76	35600	2242	13400	2.0	
0.64	42600	2658	13200	1.65	
0.70	38600	2412	13300	1.85	
0.82	33200	2073	13400	2.1	
0.92	28600	1839	13500	2.5	JRTR139R79DN71M4
1.2	22200	1397	13600	3.2	JRTRF139R79DN71M4
1.4	19200	1226	13700	3.7	
1.6	17300	1090	13700	4.1	
1.8	15100	951	13700	4.7	
0.82	33100	2067	7230	1.15	
1.0	26900	1693	7820	1.40	
1.1	24100	1550	8030	1.55	JRTR109R79DN71M4
1.2	21900	1407	8130	1.75	JRTRF109R79DN71M4
1.4	18800	1209	8230	2.0	
1.6	16400	1055	8300	2.3	
0.86	31500	1987	7390	1.20	
0.93	28400	1827	7690	1.35	
1.1	24500	1599	8010	1.55	JRTR109R79DN71M4
1.2	21800	1400	8140	1.75	JRTRF109R79DN71M4
1.4	18800	1226	8230	2.0	
1.8	14600	939	8340	2.6	
2.1	12600	822	8380	3.0	
1.4	19700	1207	5710	1.35	JRTR99R59DN71M4
1.6	17500	1084	5940	1.50	JRTRF99R59DN71M4
1.2	22600	1396	4100	1.15	
1.4	19700	1228	4980	1.35	
1.6	17700	1069	5920	1.50	
1.8	15400	938	6130	1.70	JRTR99R59DN71M4
2.1	13200	824	6210	2.0	JRTRF99R59DN71M4
2.3	11800	737	6260	2.2	
2.7	10100	632	6310	2.6	
3.9	6990	431	6380	3.8	
4.5	6090	379	6400	4.4	
5.0	5460	336	6410	4.9	
2.1	12800	802	3940	1.05	JRTR89R59DN71M4
2.2	12000	754	4070	1.15	JRTRF89R59DN71M4
2.6	10200	649	4300	1.35	
2.2	12600	776	3980	1.10	
2.5	11100	685	4190	1.25	
2.8	9460	599	4380	1.45	JRTR89R59DN71S4
3.2	8300	525	4490	1.65	JRTRF89R59DN71S4
3.7	7280	456	4490	1.90	
6.3	4220	268	4490	3.2	
7.2	3730	236	4490	3.7	
3.2	9030	538	4440	1.50	
3.6	7870	472	4490	1.75	JRTR89R59DN71S4
4.2	6610	400	4490	2.1	JRTRF89R59DN71S4
4.7	5930	361	4490	2.3	

Output speed n_a [r/min]	Output torque T_a lbf in	Ratio i	Permitted overhung load F_{Ra} [1] lbf	Service factor f_B	Model
0.50HP					
4.6	6160	373	2460	1.20	
5.2	5400	327	2580	1.35	
5.9	4810	289	2670	1.50	
6.5	4290	260	2730	1.70	JRTR79R39DN71S4
7.6	3610	224	2800	2.0	JRTRF79R39DN71S4
8.7	3170	197	2840	2.3	
10	2780	169	2870	2.6	
11	2420	149	2890	3.0	
5.8	4730	294	1860	1.10	
6.5	4290	261	1960	1.25	JRTR69R39DN71M4
7.3	3850	234	2040	1.40	JRTRF69R39DN71M4
8.5	3260	200	2140	1.65	
3.8	8300	289.74	6350	3.2	
4.3	7320	255.71	6370	3.6	JRTR99DN80M6
4.6	6910	241.25	6380	3.8	JRTRF99DN80M6
5.1	6190	216.28	6390	4.3	
4.5	7060	246.54	4490	1.95	
5.1	6200	216.54	4490	2.2	
5.3	5890	205.71	4490	2.3	JRTR89DN80M6
6.0	5200	181.77	4490	2.6	JRTRF89DN80M6
7.1	4450	155.34	4490	3.1	
7.7	4080	142.41	4490	3.4	
6.6	4770	166.59	2670	1.50	
7.5	4170	145.67	2740	1.75	JRTR79DN80M6
8.0	3960	138.39	2760	1.85	JRTRF79DN80M6
8.7	3620	195.24	2800	2.0	
10	3080	166.59	2840	2.4	
12	2700	145.67	2870	2.7	JRTR79DN71M4
12	2560	138.39	2880	2.8	JRTRF79DN71M4
14	2250	121.42	2900	3.2	
17	1900	102.99	2920	3.8	
18	1720	92.97	2920	4.2	
7.0	4530	158.14	1900	1.15	
8.0	3940	137.67	2030	1.35	JRTR69DN80M6
8.5	3690	128.97	2070	1.45	JRTRF69DN80M6
9.7	3260	113.94	2140	1.65	
8.5	3700	199.81	2070	1.45	
9.2	3410	184.07	2120	1.55	
11	2930	158.14	2190	1.80	
12	2550	137.67	2230	2.1	
13	2390	128.97	2250	2.2	
15	2110	113.94	2280	2.5	JRTR69DN71M4
16	1960	105.83	2290	2.7	JRTRF69DN71M4
18	1770	95.91	2300	3.0	
20	1590	86.11	2320	3.3	
23	1370	74.17	2330	3.9	
24	1290	69.75	2340	4.1	
28	1130	61.26	2340	4.7	
30	1050	56.89	2350	5.0	
8.5	3690	128.77	1630	1.10	
9.1	3450	120.63	1650	1.15	JRTR59DN80M6
10	3050	106.58	1680	1.30	JRTRF59DN80M6
11	2830	98.99	1700	1.40	
9.1	3460	186.89	1650	1.15	
9.9	3190	172.17	1670	1.25	
11	2740	147.92	1710	1.45	JRTR59DN71M4
13	2380	128.77	1730	1.65	JRTRF59DN80M4
14	2230	120.63	1740	1.80	
16	1970	106.58	1750	2.0	

Output speed n_a [r/min]	Output torque T_a lbf in	Ratio i	Permitted overhung load F_{Ra} [1] lbf	Service factor f_B	Model
0.50HP					
17	1830	98.99	1760	2.2	
19	1660	89.71	1770	2.4	
21	1490	80.55	1780	2.7	
25	1280	69.23	1730	3.1	JRTR59DN71M4
26	1200	64.85	1700	3.3	JRTRF59DN80M4
30	1060	57.29	1640	3.8	
32	980	53.22	1600	4.0	
35	890	48.23	1560	4.5	
12	2590	139.99	1160	1.00	
14	2260	121.87	1270	1.15	
15	2110	114.17	1280	125	
17	1870	100.86	1310	1.40	
18	1730	93.68	1320	1.55	
20	1570	84.90	1330	1.70	
22	1410	76.23	1340	1.90	
25	1270	68.54	1350	2.1	JRTR49DN71M4
26	1190	64.21	1340	2.2	JRTRF49DN80M4
30	1050	56.73	1290	2.5	
32	970	52.69	1270	2.7	
36	880	47.75	1230	3.0	
40	795	42.87	1190	3.3	
46	680	36.93	1140	3.9	
49	640	34.73	1120	4.1	
50	625	33.79	1110	3.4	
55	575	31.12	1090	3.4	JRTR49DN71M4
64	495	26.74	1040	5.3	JRTRF49DN80M4
73	430	23.28	990	6.2	
78	400	21.81	970	6.6	
19	1680	90.77	1010	1.05	
20	1560	84.61	1100	1.15	
23	1370	73.96	1220	1.30	
25	1280	69.33	1240	1.40	
28	1130	61.18	1260	1.55	
30	1030	55.76	1230	1.70	JRTR39DN71M4
35	890	48.08	1190	2.0	JRTRF39DN71M4
38	830	44.81	1160	2.1	
43	725	39.17	1120	2.4	
46	680	36.72	1100	2.6	
52	600	32.40	1060	2.9	
59	530	28.73	1020	3.3	
70	450	24.42	980	3.9	
60	525	28.32	1020	3.4	
65	480	26.03	1000	3.4	
76	410	22.27	950	4.3	JRTR39DN71S4
88	355	19.31	910	4.9	JRTRF39DN71S4
94	330	18.05	890	5.3	
109	285	16.60	850	6.1	
128	245	13.25	810	6.8	
144	215	11.83	785	7.4	
28	1130	61.30	800	1.00	
30	1030	55.87	810	1.10	
35	890	48.17	785	1.30	
38	830	44.90	775	1.40	JRTR29DN71S4
43	725	39.25	750	1.60	JRTRF29DN71S4
46	680	36.79	735	1.70	
52	600	32.47	715	1.90	
59	530	28.78	690	2.1	
69	450	24.47	660	2.5	



Output speed n_a [r/min]	Output torque T_a lbf in	Ratio i	Permitted overhung load F_{Ra} [1] lbf	Service factor f_B	Model
0.50HP					
60	525	28.37	690	2.2	JRTR29DN71S4 JRTRF29DN71S4
65	480	26.09	670	2.4	
76	410	22.32	645	2.8	
88	355	19.35	620	3.2	
94	335	18.08	605	3.4	
109	285	15.63	580	4.0	
128	245	13.28	555	4.7	
44	715	38.61	425	1.05	JRTR19DN71S4 JRTRF19DN71S4
47	670	36.20	425	1.10	
53	590	31.94	415	1.25	
60	525	28.32	405	1.45	
71	445	24.07	395	1.70	
208	151	15.84	305	5.0	JRTR19DN71S2 JRTRF19DN71S2
238	132	13.84	295	5.7	
254	124	12.98	290	6.1	
288	109	11.45	280	6.5	
325	97	10.15	270	7.0	
382	82	8.63	255	7.7	
437	72	7.55	245	6.9	
469	67	7.04	240	7.2	
537	59	6.15	230	8.1	
572	55	5.76	225	8.5	
649	49	5.09	215	9.3	
732	43	4.51	210	9.9	
861	37	3.83	199	11	
67	465	25.23	400	1.60	JRTR19DN71M4 JRTRF19DN71M4
73	425	23.15	390	1.75	
86	365	19.71	380	2.1	
100	315	16.99	365	2.4	
107	290	15.84	360	2.6	
123	255	13.84	350	2.9	
131	240	12.98	345	3.1	
148	210	11.45	335	3.4	
167	188	10.15	325	3.6	
197	160	8.63	310	4.0	
225	140	7.55	290	3.5	
242	131	7.04	285	3.7	
276	114	6.15	275	4.2	
295	107	5.76	270	4.4	
334	94	5.09	260	4.8	
377	84	4.51	255	5.1	
443	71	3.83	240	5.6	
280	113	6.07	880	3.4	JRTRX69DN71M4 JRTRXF69DN71M4
328	96	5.18	840	6.9	
376	84	4.53	800	8.6	
395	80	4.30	790	8.9	
451	70	3.77	755	11	
531	59	3.20	720	15	
588	54	2.89	695	18	
669	47	2.54	665	22	
708	45	2.40	655	24	
832	38	2.04	620	31	
309	102	5.50	695	3.4	JRTRX59DN71M4 JRTRXF59DN71M4
336	94	5.07	675	3.4	
391	81	4.35	645	7.5	
449	70	3.79	615	8.7	
479	66	3.55	605	9.3	
542	58	3.14	580	9.9	
584	54	2.91	565	11	
644	49	3.64	550	12	
717	44	2.37	530	14	
833	38	2.04	505	16	
885	36	1.92	495	17	
1030	31	1.65	470	20	

Output speed n_a [r/min]	Output torque T_a lbf in	Ratio i	Permitted overhung load F_{Ra} [1] lbf	Service factor f_B	Model
0.75HP					
0.28	138100	6077	27000	1.15	JRTR169R99DN80S4 JRTRF169R99DN80S4
0.31	122900	5407	27000	1.30	
0.36	104100	4650	27000	1.55	
0.41	90100	4129	27000	1.75	
0.39	104900	4325	14600	1.10	JRTR149R79DN80S4 JRTRF149R79DN80S4
0.45	91900	3754	15100	1.25	
0.51	80100	3302	15500	1.45	
0.58	70000	2898	15800	1.65	
0.66	63600	2555	16000	1.80	JRTR149R79DN80S4 JRTRF149R79DN80S4
0.76	55000	2211	16200	2.1	
0.87	48600	1951	16300	2.4	
0.99	41300	1705	16400	2.8	
1.1	36900	1536	16500	3.1	
1.3	32000	1329	16600	3.6	
1.4	27700	1166	16600	4.1	
0.68	61900	2484	12400	1.15	JRTR139R79DN80S4 JRTRF139R79DN80S4
0.64	66200	2658	12200	1.05	JRTR139R79DN80S4 JRTRF139R79DN80S4
0.70	60100	2412	12500	1.20	
0.82	51600	2073	12900	1.35	
0.92	45000	1839	13100	1.55	
1.1	38400	1598	13300	1.85	
1.2	34600	1397	13400	2.0	
1.4	30100	1226	13500	2.4	
1.6	27000	1090	13600	2.6	
1.8	23500	951	13600	3.0	
2.0	20000	831	13700	3.5	
1.2	34400	1407	7080	1.10	JRTR109R79DN80S4 JRTRF109R79DN80S4
1.4	29500	1209	7590	1.30	
1.6	25800	1055	7910	1.45	
1.8	22500	919	8110	1.70	
2.1	20100	815	8190	1.90	
2.4	17600	717	8260	2.2	
2.7	15300	626	8320	2.5	
1.2	34200	1400	7100	1.10	JRTR109R79DN80S4 JRTRF109R79DN80S4
1.4	29700	1226	7570	1.30	
1.5	26500	1104	7850	1.45	
1.8	22900	939	8100	1.65	
2.1	19900	822	8200	1.90	
2.0	20500	824	4730	1.30	JRTR99R59DN80S4 JRTRF99R59DN80S4
2.3	18300	737	5380	1.45	
2.7	15700	632	6110	1.70	
3.0	13600	560	6200	1.95	
3.5	11800	484	6260	2.2	
3.9	10800	431	6290	2.5	
4.5	9460	379	6330	2.8	
5.0	8440	336	6350	3.1	
5.7	7380	296	6370	3.6	
6.8	6120	249	6400	4.3	
3.2	12900	525	3090	1.05	JRTR89R59DN80S4 JRTRF89R59DN80S4
3.7	11300	456	4170	1.20	
4.2	9760	398	4360	1.40	
4.8	8660	352	4470	1.60	
5.5	7430	305	4490	1.85	
3.6	12100	472	4060	1.15	JRTR89R59DN80S4 JRTRF89R59DN80S4
4.2	10200	400	4310	1.35	
4.7	9180	361	4420	1.50	
6.1	7090	276	2270	1.00	JRTR79R39DN80S4 JRTRF79R39DN80S4
7.2	6030	236	2480	1.20	
7.6	5630	221	2550	1.30	
9.1	4710	186	2680	1.55	

Output speed n_a [r/min]	Output torque T_a lbf in	Ratio i	Permitted overhung load F_{Ra} [1] lbf	Service factor f_B	Model
0.75HP					
3.9	12200	289.74	6250	2.2	
4.4	10700	255.71	6290	2.5	JRTR99DN90S6
4.6	10100	241.25	6310	2.6	JRTRF99DN90S6
5.2	9130	216.28	6340	2.9	
5.8	8100	289.74	6360	3.3	
6.6	7150	255.71	6380	3.7	JRTR99DN80S4
7.0	6750	241.25	6380	3.9	JRTRF99DN80S4
7.8	6050	216.28	6400	4.4	
4.5	10400	246.54	4030	1.30	
5.2	9140	216.54	4430	1.50	JRTR89DN90S6
5.4	8680	205.71	4470	1.60	JRTRF89DN90S6
6.2	7670	181.77	4490	1.80	
7.2	6550	155.34	4490	2.1	
6.8	6890	246.54	4490	2.0	
7.8	6050	216.54	4490	2.3	
8.2	5750	205.71	4490	2.4	
9.3	5080	181.77	4490	2.7	JRTR89DN80S4
11	4340	155.34	4490	3.2	JRTRF89DN80S4
12	3980	142.41	4490	3.4	
14	3490	124.97	4490	3.9	
14	3310	118.43	4490	4.1	
16	2900	103.65	4490	4.7	
10	4660	166.59	2680	1.55	
12	4070	145.67	2750	1.80	
12	3870	138.39	2770	1.85	
14	3390	121.42	2820	2.1	JRTR79DN80S4
16	2880	102.99	2860	2.5	JRTRF79DN80S4
18	2600	92.97	2880	2.8	
21	2280	81.80	2900	3.2	
22	2160	77.24	2910	3.4	
26	1840	65.77	2920	3.9	
11	4420	158.14	1930	1.20	
12	3850	137.67	2040	1.40	
13	3600	128.97	2090	1.45	
15	3180	113.94	2150	1.65	
16	2960	105.83	2180	1.80	JRTR69DN80S4
18	2680	95.91	2220	2.0	JRTRF69DN80S4
20	2400	86.11	2250	2.2	
23	2070	74.17	2280	2.6	
24	1950	69.75	2290	2.7	
28	1710	61.26	2310	3.1	
30	1590	56.89	2320	3.3	
14	3370	120.63	1660	1.20	
16	2980	106.58	1690	1.35	
17	2760	98.99	1710	1.45	
19	2510	89.71	1720	1.60	
21	2250	80.55	1740	1.75	
24	1930	69.23	1680	2.1	
26	1810	64.85	1650	2.2	JRTR59DN80S4
30	1600	57.29	1590	2.5	JRTRF59DN80S4
32	1480	53.22	1560	2.7	
35	1340	48.23	1520	3.0	
39	1210	43.30	1470	3.3	
45	1040	37.30	1410	3.8	
48	980	35.07	1390	4.1	
64	735	26.31	1280	5.4	
68	695	24.99	1260	5.7	JRTR59DN80S4
77	610	21.93	1210	6.5	JRTRF59DN80S4
91	520	18.60	1150	7.7	
18	2620	93.68	1140	1.00	
20	2370	84.90	1250	1.10	
22	2130	76.23	1280	1.25	JRTR49DN80S4
25	1910	68.54	1300	1.40	JRTRF49DN80S4
26	1790	64.21	1290	1.50	

Output speed n_a [r/min]	Output torque T_a lbf in	Ratio i	Permitted overhung load F_{Ra} [1] lbf	Service factor f_B	Model
0.75HP					
30	1580	56.73	1250	1.65	
32	1470	52.69	1220	1.80	
35	1330	47.75	1190	2.0	JRTR49DN80S4
39	1190	42.87	1160	2.2	JRTRF49DN80S4
46	1030	36.93	1110	2.6	
49	970	34.73	1090	2.7	
57	830	29.88	1050	3.2	
63	745	26.74	1020	3.5	JRTR49DN80S4
73	650	23.28	980	4.1	JRTRF49DN80S4
78	610	21.81	960	4.3	
28	1710	61.18	990	1.05	
30	1560	55.76	1100	1.15	
35	1340	48.08	1130	1.30	
38	1250	44.81	1110	1.40	JRTR39DN80S4
43	1090	39.17	1080	1.60	JRTRF39DN80S4
46	1020	36.72	1060	1.70	
52	900	32.40	1030	1.95	
59	800	28.73	990	2.2	
69	680	24.42	950	2.6	
76	620	22.27	930	2.8	
88	540	19.31	890	3.3	
94	500	18.05	870	3.5	JRTR39DN80S4
108	435	15.60	840	4.0	JRTRF39DN80S4
128	370	13.25	800	4.5	
143	330	11.83	770	4.9	
43	1090	39.25	705	1.05	
46	1020	36.79	695	1.10	JRTR29DN80S4
52	900	32.47	675	1.25	JRTRF29DN80S4
59	800	28.78	660	1.45	
69	680	24.47	635	1.70	
76	620	22.32	620	1.85	
87	540	19.35	595	2.1	
93	505	18.08	585	2.3	
108	435	15.63	565	2.6	
127	370	13.28	540	3.1	
143	330	11.86	525	3.4	
167	280	10.13	500	3.8	JRTR29DN80S4
180	260	9.41	485	4.1	JRTRF29DN80S4
207	225	8.16	465	4.5	
222	210	7.63	455	4.6	
256	184	6.59	435	5.1	
302	157	5.60	415	5.6	
338	140	5.00	405	6.0	
396	120	4.27	385	6.4	
422	112	4.00	375	6.7	
502	94	3.37	355	7.4	
86	550	19.71	345	1.35	
99	475	16.99	340	1.60	
107	440	15.84	335	1.70	
122	385	13.84	325	1.95	
130	360	12.98	320	2.1	
148	320	11.45	315	2.2	
166	280	10.15	305	2.4	JRTR19DN80S4
196	240	8.63	295	2.6	JRTRF19DN80S4
224	210	7.55	275	2.4	
240	197	7.04	270	2.5	
275	172	6.15	265	2.8	
293	161	5.76	260	2.9	
332	142	5.09	250	3.2	
375	126	4.51	245	3.4	
441	107	3.83	235	3.7	
396	119	8.63	245	5.3	JRTR19DN71M2
453	104	7.55	235	4.8	JRTRF19DN71M2
486	97	7.04	230	5.0	



Output speed n_a [r/min]	Output torque T_a lbf in	Ratio i	Permitted overhung load F_{Ra} [1] lbf	Service factor f_B	Model
0.75HP					
556	85	6.15	220	5.6	
593	80	5.76	215	5.9	JRTR19DN71M2
672	70	5.09	210	6.4	JRTRF19DN71M2
758	62	4.51	200	6.8	
892	53	3.83	193	7.5	
326	145	5.18	830	4.6	
373	127	4.53	800	5.7	
393	120	4.30	785	5.9	
448	106	3.77	755	7.3	
528	90	3.20	715	9.9	JRTRX69DN80S4
585	81	2.89	690	12	JRTRXF69DN80S4
665	71	2.54	665	15	
704	67	2.40	650	16	
827	57	2.04	620	21	
910	52	1.86	600	21	
1050	45	1.61	570	22	
388	122	4.35	640	4.9	
446	106	3.79	610	5.8	
476	99	3.55	600	6.2	
539	88	3.14	575	6.5	
580	81	2.91	560	7.3	JRTRX59DN80S4
640	74	2.64	545	8.3	JRTRXF59DN80S4
713	66	2.37	525	9.2	
828	57	2.04	500	11	
880	54	1.92	490	11	
1025	46	1.65	470	13	
1145	41	1.48	450	15	
1295	37	1.30	435	15	
1.0HP					
0.38	138400	4650	27000	1.15	JRTR169R99DN80M4
0.42	120500	4129	27000	1.30	JRTRF169R99DN80M4
0.47	105500	3692	27000	1.50	
0.66	82200	2657	27000	1.95	
0.75	70200	2333	27000	2.3	JRTR169R99DN80M4
0.84	61600	2085	27000	2.6	JRTRF169R99DN80M4
0.93	54300	1877	27000	2.9	
1.2	44500	1438	27000	3.6	
0.53	104700	3302	14600	1.10	JRTR149R79DN80M4
0.60	91600	2898	15100	1.25	JRTRF149R79DN80M4
0.69	82800	2555	15400	1.40	
0.79	71700	2211	15800	1.60	
0.90	63200	1951	16000	1.80	JRTR149R79DN80M4
1.0	54100	1705	16200	2.1	JRTRF149R79DN80M4
1.1	48500	1536	16300	2.4	
1.3	41900	1329	16400	2.7	
1.5	36500	1166	16500	3.1	
0.94	59600	1863	12500	1.20	
1.1	50300	1586	12900	1.40	
1.3	45100	1391	13100	1.55	JRTR139R79DN80M4
1.4	40500	1256	13200	1.75	JRTRF139R79DN80M4
1.6	35400	1105	13400	2.0	
1.7	33300	1043	13400	2.1	
2.0	28200	888	13500	2.5	
0.84	67200	2073	12200	1.05	
0.95	58800	1839	12600	1.20	
1.1	50400	1598	12900	1.40	
1.2	45100	1397	13100	1.55	JRTR139R79DN80M4
1.4	39300	1226	13300	1.80	JRTRF139R79DN80M4
1.6	35200	1090	13400	2.0	
1.8	30700	951	13500	2.3	
2.1	26200	831	13600	2.7	
2.4	22800	730	13600	3.1	

Output speed n_a [r/min]	Output torque T_a lbf in	Ratio i	Permitted overhung load F_{Ra} [1] lbf	Service factor f_B	Model
1.0HP					
1.7	33700	1055	7160	1.15	
1.9	29400	919	7590	1.30	
2.1	26300	815	7870	1.45	JRTR109R79DN80M4
2.4	23000	717	8100	1.65	JRTRF109R79DN80M4
2.8	20000	626	8190	1.90	
3.3	16500	528	8290	2.3	
1.6	34800	1104	7030	1.10	
1.9	30000	939	7540	1.25	
2.1	26000	822	7890	1.45	
2.9	19000	614	8220	2.0	JRTR109R79DN80M4
3.2	16700	544	8290	2.3	JRTRF109R79DN80M4
3.6	15100	492	8330	2.5	
4.2	12800	417	8380	3.0	
4.8	11600	369	8400	3.3	
5.4	10100	323	8420	3.8	
3.7	15300	469	8320	2.5	JRTR109R79DN80M4
4.1	13900	426	8350	2.7	JRTRF109R79DN80M4
2.3	24300	755	5080	1.10	JRTR99R59DN80M4 JRTRF99R59DN80M4
2.4	23900	737	3720	1.10	
2.8	20500	632	5620	1.30	
3.1	17800	560	5910	1.50	
3.6	15500	484	6120	1.70	JRTR99R59DN80M4
4.1	14000	431	6180	1.90	JRTRF99R59DN80M4
4.6	12300	379	6250	2.2	
5.2	10900	336	6290	2.4	
5.9	9610	296	6320	2.8	
7.0	7990	249	6360	3.3	
2.8	20900	625	5570	1.25	
3.2	18200	549	5870	1.45	
3.8	15400	466	6130	1.70	
4.2	13800	520	6190	1.90	JRTR99R59DN80M4
4.7	12100	370	6250	2.2	JRTRF99R59DN80M4
5.0	11400	349	6270	2.3	
5.9	9690	297	6320	2.7	
6.5	8770	270	6340	3.0	
4.4	12700	398	3960	1.05	
5.0	11300	352	4170	1.20	
5.7	9730	305	4360	1.40	JRTR89R59DN80M4
6.5	8610	268	4480	1.60	JRTRF89R59DN80M4
7.4	7600	236	4490	1.80	
8.4	6610	209	4490	2.1	
4.4	13200	400	3880	1.05	
4.8	11900	361	4090	1.15	
5.8	9840	300	4350	1.40	JRTR89R59DN80M4
6.8	8330	256	4490	1.65	JRTRF89R59DN80M4
7.5	7540	232	4490	1.80	
9.0	6430	195	4490	2.1	
8.9	6390	197	2410	1.15	
10	5560	169	2560	1.30	JRTR79R39DN80M4 JRTRF79R39DN80M4
12	4870	149	2660	1.50	
9.4	6130	186	2460	1.20	JRTR79R39DN80M4 JRTRF79R39DN80M4
11	5130	158	1750	1.05	JRTR69R39DN80M4 JRTRF69R39DN80M4
4.6	13800	255.71	6190	1.90	
4.8	13000	241.25	6220	2.0	JRTR99DN90S6
5.4	11600	216.28	6260	2.3	JRTRF99DN90S6
6.2	10000	186.30	6310	2.6	
6.8	9190	170.02	6330	2.9	

Output speed n_a [r/min]	Output torque T_a lbf in	Ratio i	Permitted overhung load F_{Ra} [1] lbf	Service factor f_B	Model
1.0HP					
6.0	10400	289.74	6300	2.5	
6.8	9200	255.71	6330	2.9	
7.3	8680	241.25	6350	3.1	JRTR99DN80M4 JRTRF99DN80M4
8.1	7780	216.28	6370	3.4	
9.4	6700	186.30	6390	4.0	
10	6110	170.02	6400	4.3	
5.4	11700	216.54	3550	1.15	
5.7	11100	205.71	3770	1.25	
6.4	9830	181.77	4240	1.40	
7.5	8400	155.34	4490	1.65	JRTR89DN90S6 JRTRF89DN90S6
8.2	7700	142.41	4490	1.80	
9.3	6750	124.97	4490	2.0	
9.8	6400	118.43	4490	2.1	
11	5600	103.56	4490	2.5	
12	5050	93.38	4490	2.7	
7.1	8870	246.54	4450	1.55	
8.1	7790	216.54	4490	1.75	
8.5	7400	205.71	4490	1.85	
9.6	6540	181.77	4490	2.1	
11	5580	155.34	4490	2.5	JRTR89DN80M4 JRTRF89DN80M4
12	5120	142.41	4490	2.7	
14	4490	124.97	4490	3.0	
15	4260	118.43	4490	3.2	
17	3720	103.65	4490	3.7	
19	3360	93.38	4490	4.1	
9.6	6560	121.42	2380	1.10	
11	5560	102.99	2560	1.30	
13	5020	92.97	2640	1.45	
14	4420	81.80	2710	1.65	JRTR79DN90S6
15	4170	77.24	2740	1.75	JRTRF79DN90S6
18	3550	65.77	2800	2.0	
20	3110	57.68	2840	2.3	
22	2810	52.07	2870	2.6	
25	2470	45.81	2890	2.9	
11	5990	166.59	2490	1.20	
12	5240	145.67	2610	1.40	
13	4970	138.39	2640	1.45	
14	4360	121.42	2720	1.65	
17	3700	102.99	2790	1.95	
19	3340	92.97	2820	2.2	JRTR79DN80M4
21	2940	81.80	2860	2.5	JRTRF79DN80M4
23	2770	77.24	2870	2.6	
27	2360	65.77	2890	3.1	
30	2070	57.68	2910	3.5	
34	1870	52.07	2920	3.9	
38	1640	45.81	2920	4.4	
40	1550	43.26	2920	4.7	
12	5180	95.91	1730	1.00	
14	4650	86.11	1870	1.15	
16	4010	74.17	2010	1.30	
17	3770	69.75	2060	1.40	
19	3310	61.26	2130	1.60	
20	3070	56.89	2170	1.75	JRTR69DN90S6
23	2780	51.56	2200	1.90	JRTRF69DN90S6
25	2500	46.29	2240	2.1	
29	2150	39.88	2270	2.4	
31	2020	37.50	2280	2.5	
36	1740	32.27	2310	2.7	
40	1550	28.83	2320	3.0	
13	4950	137.67	1800	1.05	JRTR69DN80M4
14	4640	128.97	1880	1.15	JRTRF69DN80M4
15	4090	113.94	2000	1.30	

Output speed n_a [r/min]	Output torque T_a lbf in	Ratio i	Permitted overhung load F_{Ra} [1] lbf	Service factor f_B	Model
1.0HP					
17	3800	105.83	2050	1.40	
18	3450	95.91	2110	1.55	
20	3090	86.11	2160	1.70	
24	2660	74.17	2220	2.0	JRTR69DN80M4
25	2500	69.75	2240	2.1	JRTRF69DN80M4
29	2200	61.26	2270	2.4	
31	2040	56.89	2280	2.6	
34	1850	51.56	2300	2.9	
38	1660	46.29	2310	3.2	
17	3740	69.23	1620	1.05	
18	3500	64.85	1640	1.15	
20	3090	57.29	1680	1.30	
22	2870	53.22	1660	1.40	JRTR59DN90S6
24	2600	48.23	1620	1.55	JRTRF59DN90S6
27	2340	43.30	1580	1.70	
31	2010	37.30	1520	1.95	
33	1890	35.07	1500	2.1	
39	1630	30.18	1440	2.4	
43	1450	26.97	1400	2.7	
16	3830	106.58	1610	1.05	
18	3560	98.99	1640	1.10	
20	3220	89.71	1670	1.25	
22	2890	80.55	1660	1.35	
25	2490	69.23	1600	1.60	
27	2330	64.85	1580	1.70	
31	2060	57.29	1530	1.95	JRTR59DN80M4
33	1910	53.22	1500	2.1	JRTRF59DN80M4
36	1730	48.23	1470	2.3	
40	1550	43.30	1420	2.6	
47	1340	37.30	1370	3.0	
50	1260	35.07	1350	3.1	
58	1080	30.18	1290	3.7	
65	970	26.97	1250	4.1	
67	940	26.31	1240	4.2	
70	890	24.99	1220	4.4	JRTR59DN80M4
80	785	21.93	1180	5.0	JRTRF59DN80M4
94	665	18.60	1120	6.0	
24	2580	47.75	1170	1.05	
27	2310	42.87	1220	1.15	
32	1990	36.93	1180	1.35	JRTR49DN90S6
34	1870	34.73	1170	1.40	JRTRF49DN90S6
39	1610	29.88	1130	1.65	
44	1440	26.70	1090	1.85	
49	1270	23.59	1060	2.1	
26	2460	68.54	1240	1.10	
27	2310	64.21	1220	1.15	
31	2040	56.73	1190	1.30	
33	1890	52.69	1170	1.40	
37	1710	47.75	1140	1.55	JRTR49DN80M4
41	1540	42.87	1110	1.70	JRTRF49DN80M4
47	1320	36.93	1070	2.0	
50	1240	34.73	1050	2.1	
59	1070	29.88	1010	2.5	
66	960	26.70	980	2.8	
74	840	23.59	950	3.1	
65	960	26.74	980	2.8	
75	830	23.28	950	3.2	
80	780	21.81	930	3.4	JRTR49DN80M4
91	690	19.27	900	3.8	JRTRF49DN80M4
98	640	17.89	880	4.0	
108	580	16.22	850	4.2	
41	1550	28.73	1050	1.15	JRTR39DN90S6
48	1320	24.42	1010	1.35	JRTRF39DN90S6



Output speed n_a [r/min]	Output torque T_a lbf in	Ratio i	Permitted overhung load F_{Ra} [1] lbf	Service factor f_B	Model
1.0HP					
36	1720	48.08	980	1.00	
39	1610	44.81	1060	1.10	
45	1400	39.17	1030	1.25	JRTR39DN80M4
48	1320	36.72	1010	1.35	JRTRF39DN80M4
54	1160	32.40	980	1.50	
61	1030	28.73	950	1.70	
72	870	24.42	920	2.0	
79	800	22.27	890	2.2	
91	690	19.31	860	2.5	
97	645	18.05	850	2.7	
112	560	15.60	810	3.1	JRTR39DN80M4
132	475	13.25	775	3.5	JRTRF39DN80M4
148	425	11.83	750	3.8	
173	360	10.11	715	4.1	
185	340	9.47	705	4.3	
61	1030	28.78	620	1.10	JRTR29DN80M4
72	880	24.47	600	1.30	JRTRF29DN80M4
78	800	22.32	590	1.45	
91	695	19.35	570	1.65	
97	650	18.08	560	1.75	
112	560	15.63	540	2.0	
132	475	13.28	520	2.4	
148	425	11.86	505	2.7	JRTR29DN80M4
173	360	10.13	485	3.0	JRTRF29DN80M4
186	335	9.41	465	3.2	
215	290	8.16	450	3.5	
230	270	7.63	440	3.6	
266	235	6.59	425	4.0	
313	200	5.60	405	4.3	
350	180	5.00	390	4.7	
89	705	19.71	310	1.05	
103	610	16.99	310	1.25	
111	565	15.84	305	1.30	
126	495	13.84	300	1.50	
135	465	12.98	300	1.60	
153	410	11.45	295	1.75	
172	365	10.15	285	1.85	JRTR19DN80M4
203	310	8.63	280	2.0	JRTRF19DN80M4
232	270	7.55	260	1.80	
249	250	7.04	255	1.90	
285	220	6.15	250	2.2	
304	205	5.76	245	2.3	
344	183	5.09	240	2.5	
388	162	4.51	235	2.6	
457	138	3.83	225	2.9	
176	355	19.71	285	2.1	
205	305	16.99	280	2.4	
219	285	15.84	275	2.6	
251	250	13.84	265	3.0	
268	235	12.98	260	3.2	
304	205	11.45	255	3.5	
342	184	10.15	250	3.7	JRTR19DN80S2
403	156	8.63	240	4.1	JRTRF19DN80S2
461	137	7.55	225	3.6	
494	127	7.04	220	3.8	
565	111	6.15	215	4.3	
603	104	5.76	210	4.5	
683	92	5.09	205	4.9	
771	82	4.51	196	5.2	
907	69	3.83	188	5.7	

Output speed n_a [r/min]	Output torque T_a lbf in	Ratio i	Permitted overhung load F_{Ra} [1] lbf	Service factor f_B	Model
1.0HP					
338	186	5.18	820	3.6	
387	163	4.53	780	4.5	
407	155	4.30	770	4.6	
464	136	3.77	740	5.7	
547	115	3.20	700	7.7	JRTRX69DN80M4
606	104	2.89	680	9.0	JRTRXF69DN80M4
689	91	2.54	650	11	
730	86	2.40	640	13	
857	74	2.04	605	16	
943	67	1.86	590	17	
1090	58	1.61	560	17	
402	157	4.35	625	3.8	
462	136	3.79	595	4.5	
493	128	3.55	585	4.8	
558	113	3.14	565	5.1	
601	105	2.91	550	5.7	
663	95	2.64	535	6.4	JRTRX59DN80M4
739	85	2.37	515	7.2	JRTRXF59DN80M4
858	73	2.04	490	8.3	
912	69	1.92	480	8.8	
1060	59	1.65	460	10	
1185	53	1.48	445	11	
1340	47	1.30	425	12	
1.5HP					
0.66	126400	2657	27000	1.25	
0.76	109000	2333	27000	1.45	
0.85	96200	2085	27000	1.65	
0.94	85400	1877	27000	1.85	JRTR169R99DN90S4
1.1	76000	1670	27000	2.1	JRTRF169R99N90S4
1.2	68400	1438	27000	2.3	
1.4	60800	1279	27000	2.6	
1.6	52400	1123	27000	3.0	
0.80	108400	2211	14400	1.05	
0.90	95700	1951	15000	1.20	
1.0	82400	1705	15400	1.40	
1.1	74000	1536	15700	1.55	
1.3	64000	1329	16000	1.80	JRTR149R79DN90S4
1.5	55900	1166	16200	2.1	JRTRF149R79N90S4
1.7	49000	1029	16300	2.3	
2.0	42600	889	16400	2.7	
2.2	37300	784	16500	3.1	
2.5	32900	695	16600	3.5	
1.3	68200	1391	12100	1.05	
1.4	61400	1256	12500	1.15	
1.6	53800	1105	12800	1.30	JRTR139R79DN90S4
1.7	50700	1043	12900	1.40	JRTRF139R79N90S4
2.0	42900	888	13200	1.65	
2.5	33500	699	13400	2.1	
2.9	29000	609	13500	2.4	
1.3	68300	1397	12100	1.05	
1.4	59700	1226	12500	1.20	
1.6	53300	1090	12800	1.35	
1.9	46500	951	13000	1.50	JRTR139R79DN90S4
2.1	40000	831	13200	1.75	JRTRF139R79N90S4
2.4	34900	730	13400	2.0	
2.8	29800	629	13500	2.4	
3.1	27100	560	13500	2.6	
3.6	23200	490	13600	3.0	
3.1	27900	564	13500	2.5	JRTR139R79DN90S4
3.4	25500	517	13600	2.8	JRTRF139R79N90S4

Output speed n_a [r/min]	Output torque T_a lbf in	Ratio i	Permitted overhung load F_{Ra} [1] lbf	Service factor f_B	Model
1.5HP					
2.5	34900	717	7020	1.10	JRTR109R79DN90S4 JRTRF109R79N90S4
2.8	30400	626	7500	1.25	
3.3	25300	528	7950	1.50	
2.9	29200	614	7610	1.30	JRTR109R79DN90S4 JRTRF109R79N90S4
3.2	25800	544	7910	1.45	
3.6	23300	492	8080	1.65	
4.2	19700	417	8200	1.90	
4.8	17700	369	8260	2.1	
5.5	15500	323	8320	2.5	
6.2	13600	285	8360	2.8	
7.0	11900	253	8390	3.2	
3.8	23200	469	8090	1.65	JRTR109R79DN90S4 JRTRF109R79N90S4
4.1	21100	426	8160	1.80	
4.7	18600	377	8240	2.0	
5.4	15900	325	8310	2.4	
6.2	13900	284	8350	2.7	
3.6	23500	484	3820	1.15	JRTR99R59DN90S4 JRTRF99R59N90S4
4.1	21200	431	5530	1.25	
4.7	18600	379	5830	1.45	
5.2	16500	336	6040	1.60	
6.0	14500	296	6170	1.85	
7.1	12100	249	6250	2.2	
7.5	11200	234	6280	2.4	
8.4	10000	209	6310	2.6	
3.8	23200	466	5250	1.15	JRTR99R59DN90S4 JRTRF99R59N90S4
4.2	20900	420	5560	1.25	
4.8	18300	370	5860	1.45	
5.0	17300	349	5970	1.55	
5.9	14600	297	6160	1.80	
6.5	13300	270	6210	2.0	
7.8	11300	227	6280	2.4	
6.6	13000	268	3910	1.05	JRTR89R59DN90S4 JRTRF89R59N90S4
7.5	11500	236	4140	1.20	
8.4	10000	209	4320	1.35	
6.9	12600	256	3980	1.10	JRTR89R59DN90S4 JRTRF89R59N90S4
7.6	11400	232	4160	1.20	
9.0	9710	195	4370	1.40	
6.3	14800	186.30	6150	1.80	JRTR99DN90L6 JRTRF99N90L6
6.1	15500	289.74	6120	1.70	JRTR99DN90S4 JRTRF99N90S4
6.9	13700	255.71	6200	1.95	
7.3	12900	241.25	6220	2.0	
8.2	11600	216.28	6270	2.3	
9.5	9990	186.30	6310	2.7	
10	9110	170.02	6340	2.9	
12	8080	150.78	6360	3.3	
14	6790	126.75	6380	3.9	
15	6240	116.48	6390	4.2	
7.2	13200	246.54	3000	1.05	JRTR89DN90S4 JRTRF89DN90S4
8.1	11600	216.54	3590	1.20	
8.6	11000	205.71	3800	1.25	
9.7	9740	181.77	4270	1.40	
11	8330	155.34	4490	1.65	
12	7630	142.41	4490	1.80	
14	6700	124.97	4490	2.0	
15	6350	118.43	4490	2.2	
17	5550	103.65	4490	2.5	
19	5000	93.38	4490	2.7	
22	4390	81.92	4490	3.1	
24	3890	72.57	4490	3.5	
28	3410	63.68	4490	4.0	
29	3230	60.35	4490	4.2	
33	2830	52.82	4490	4.8	

Output speed n_a [r/min]	Output torque T_a lbf in	Ratio i	Permitted overhung load F_{Ra} [1] lbf	Service factor f_B	Model
1.5HP					
15	6510	121.42	2390	1.10	JRTR79DN90S4 JRTRF79DN90S4
17	5520	102.99	2560	1.30	
19	4980	92.97	2640	1.45	
22	4380	81.80	2720	1.65	
23	4140	77.24	2750	1.75	
27	3520	65.77	2810	2.1	
31	3090	57.68	2840	2.4	
34	2790	52.07	2870	2.6	
38	2450	45.81	2890	3.0	
41	2320	43.26	2900	3.1	
48	1970	36.83	2880	3.7	
53	1790	33.47	2800	4.0	
18	5140	95.91	1750	1.05	JRTR69DN90S4 JRTRF69DN90S4
20	4610	86.11	1880	1.15	
24	3970	74.17	2020	1.35	
25	3740	69.75	2060	1.40	
29	3280	61.26	2140	1.60	
31	3050	56.89	2170	1.75	
34	2760	51.56	2210	1.90	
38	2480	46.29	2240	2.1	
44	2130	39.88	2270	2.4	
47	2010	37.50	2290	2.5	
55	1730	32.27	2240	2.8	
61	1540	28.83	2170	3.0	
63	1500	28.13	2150	3.2	JRTR69DN90S4 JRTRF69DN90S4
66	1430	26.72	2120	3.3	
75	1250	23.44	2040	3.9	
89	1060	19.89	1940	5.0	
25	3710	69.23	1490	1.05	JRTR59DN90S4 JRTRF59DN90S4
27	3470	64.85	1470	1.15	
31	3070	57.29	1440	1.30	
33	2850	53.22	1410	1.40	
37	2580	48.23	1380	1.55	
41	2320	43.30	1350	1.70	
47	2000	37.30	1300	2.0	
50	1880	35.07	1290	2.1	
58	1610	30.18	1240	2.5	
65	1440	26.97	1200	2.8	
67	1410	26.31	1200	2.8	JRTR59DN90S4 JRTRF59N90S4
70	1340	24.99	1180	3.0	
80	1170	21.93	1140	3.4	
95	990	18.60	1090	4.0	
105	900	16.79	1060	4.4	
37	2560	47.75	1060	1.05	JRTR49DN90S4 JRTRF49N90S4
41	2290	42.87	1040	1.15	
48	1980	36.93	1010	1.35	
51	1860	34.73	1000	1.45	
59	1600	29.88	960	1.65	
66	1430	26.70	940	1.85	
75	1260	23.59	910	2.1	
66	1430	26.74	940	1.85	JRTR49DN90S4 JRTRF49N90S4
76	1240	23.28	910	2.1	
81	1160	21.81	890	2.3	
91	1030	19.27	860	2.5	
98	950	17.89	850	2.7	
109	860	16.22	830	2.8	
121	780	14.56	800	3.0	
140	670	12.54	770	3.3	
149	630	11.79	755	3.4	
174	540	10.15	725	3.7	
194	485	9.07	700	4.0	



Output speed n_a [r/min]	Output torque T_a lbf in	Ratio i	Permitted overhung load F_{Ra} [1] lbf	Service factor f_B	Model
1.5HP					
54	1730	32.40	785	1.00	JRTR39DN90S4 JRTRF39N90S4
61	1540	28.73	850	1.15	
72	1300	24.42	860	1.35	
79	1190	22.27	840	1.50	JRTR39DN90S4 JRTRF39N90S4
91	1030	19.31	820	1.70	
98	960	18.05	810	1.85	
113	830	15.60	775	2.1	
133	710	13.25	745	2.4	
149	630	11.83	725	2.5	
174	540	10.11	695	2.8	
186	505	9.47	680	2.9	
221	425	7.97	650	3.2	
264	355	6.67	615	3.6	
311	300	5.67	585	4.1	
348	270	5.06	570	4.4	
91	1030	19.35	525	1.10	JRTR29DN90S4 JRTRF29N90S4
97	960	18.08	520	1.20	
113	830	15.63	505	1.35	
133	710	13.28	490	1.60	
149	635	11.86	475	1.80	
174	540	10.13	460	2.0	
187	500	9.41	440	2.1	
216	435	8.16	430	2.4	
231	405	7.63	420	2.4	
267	350	6.59	405	2.6	
315	300	5.60	390	2.9	
352	265	5.00	380	3.1	
413	225	4.27	365	3.4	
440	210	4.00	355	3.5	
523	181	3.37	340	3.9	
156	605	22.32	470	1.90	JRTR29DN80M2 JRTRF29N80M2
180	520	19.35	455	2.2	
193	490	18.08	450	2.4	
223	420	15.63	435	2.7	
262	360	13.28	415	3.2	
294	320	11.86	405	3.5	
344	270	10.13	385	3.9	
370	255	9.41	375	4.2	
427	220	8.16	360	4.6	
457	205	7.63	355	4.8	
529	179	6.59	340	5.2	
622	152	5.60	325	5.8	
697	136	5.00	315	6.2	
816	116	4.27	300	6.7	
871	108	4.00	295	6.9	JRTR19DN80M2 JRTRF19N80M2
1035	91	3.37	280	7.7	
177	530	19.71	255	1.40	JRTR19DN80M2 JRTRF19N80M2
205	460	16.99	250	1.65	
220	425	15.84	245	1.75	
252	375	13.84	245	2.0	
269	350	12.98	240	2.1	
304	310	11.45	235	2.3	
343	275	10.15	230	2.5	
404	230	8.63	225	2.7	
462	200	7.55	210	2.4	
495	191	7.04	205	2.5	
567	167	6.15	200	2.9	
605	156	5.76	198	3.0	
685	138	5.09	192	3.3	
773	122	4.51	187	3.5	
909	104	3.83	180	3.8	

Output speed n_a [r/min]	Output torque T_a lbf in	Ratio i	Permitted overhung load F_{Ra} [1] lbf	Service factor f_B	Model
1.5HP					
204	460	8.65	1720	2.6	JRTRX89DN90S4 JRTRXF89N90S4
275	340	6.41	1240	2.6	JRTRX79DN90S4 JRTRXF79N90S4
313	300	5.63	1190	3.2	
329	285	5.35	1170	3.2	
373	250	4.73	1120	4.3	
340	275	5.18	800	2.4	JRTRX69DN90S4 JRTRXF69N90S4
389	240	4.53	765	3.0	
410	230	4.30	755	3.1	
467	200	3.77	725	3.8	
551	172	3.20	690	5.2	
610	155	2.89	670	6.0	
693	136	2.54	645	7.7	
734	129	2.40	630	8.4	
862	110	2.04	600	11	
949	100	1.86	580	11	
1095	86	1.61	555	12	
1260	75	1.40	530	12	
405	230	4.35	610	2.6	JRTRX59DN90S4 JRTRXF59DN90S4
465	200	3.79	585	3.0	
496	190	3.55	575	3.2	
562	168	3.14	550	3.4	
605	156	2.91	540	3.8	
667	142	2.64	525	4.3	
743	127	2.37	505	4.8	
863	110	2.04	485	5.6	
918	103	1.92	475	5.9	
1065	89	1.65	455	6.9	
1195	79	1.48	435	7.6	
1350	70	1.30	420	8.0	
2.0HP					
0.76	147800	2333	27000	1.10	JRTR169R99DN90L4 JRTRF169R99DN90L4
0.85	130900	2085	27000	1.20	
0.94	116700	1877	27000	1.35	
1.1	103800	1670	27000	1.55	
1.2	92300	1438	27000	1.70	
1.4	82100	1279	27000	1.95	
1.6	71100	1123	27000	2.2	
1.8	63300	999	27000	2.5	
2.0	54500	861	27000	2.9	
4.1	27000	426	16600	4.2	JRTR149R89DN90L4 JRTRF149R89DN90L4
4.8	23300	368	16700	4.9	
1.0	110800	1705	14300	1.05	JRTR149R79DN90L4 JRTRF149R79DN90L4
1.1	99600	1536	14800	1.15	
1.3	86200	1329	15300	1.35	
1.5	75300	1166	15700	1.55	
1.7	66100	1029	15900	1.75	
2.0	57300	889	16100	2.0	
2.2	50400	784	16300	2.3	
2.5	44500	695	16400	2.6	
2.9	40200	619	16500	2.9	
3.2	36100	558	16500	3.2	
1.7	68000	1043	12100	1.05	JRTR139R79DN90L4 JRTRF139R79DN90L4
2.0	57700	888	12600	1.25	
2.5	45100	699	13100	1.55	
2.9	39100	609	13300	1.80	
1.6	71400	1090	12000	1.00	JRTR139R79DN90L4 JRTRF139R79DN90L4
1.9	62300	951	12400	1.15	
2.1	53900	831	12800	1.30	

Output speed n_a [r/min]	Output torque T_a lbf in	Ratio i	Permitted overhung load F_{Ra} [1] lbf	Service factor f_B	Model
2.0HP					
2.4	47100	730	13000	1.50	
2.8	40200	629	13200	1.75	
3.1	36400	560	13300	1.95	JRTR139R79DN90L4
3.6	31400	490	13500	2.2	JRTRF139R79DN90L4
4.1	27400	428	13500	2.6	
4.6	24800	381	13600	2.9	
5.5	21000	323	13600	3.4	
3.1	37400	564	13300	1.90	
3.4	34300	517	13400	2.1	JRTR139R79DN90L4
3.9	30000	453	13500	2.4	JRTRF139R79DN90L4
4.7	24700	376	13600	2.9	
3.4	34100	528	7120	1.10	JRTR109R79DN90L4 JRTRF109R79DN90L4
3.2	34800	544	7030	1.10	
3.6	31500	492	7400	1.20	
4.2	26700	417	7840	1.40	
4.8	23900	369	8050	1.60	JRTR109R79DN90L4
5.5	20800	323	8170	1.80	JRTRF109R79DN90L4
6.2	18300	285	8240	2.1	
7.0	16200	253	8300	2.4	
8.2	13700	214	8360	2.8	
3.8	31100	469	7430	1.20	
4.2	28300	426	7700	1.35	
4.7	24900	377	7980	1.50	
5.5	21400	325	8150	1.80	JRTR109R79DN90L4
6.2	18600	284	8240	2.0	JRTRF109R79DN90L4
6.9	16700	256	8290	2.3	
8.0	14400	220	8340	2.6	
9.1	12500	193	8380	3.0	
4.7	24900	379	4990	1.05	
5.2	22100	336	5400	1.20	
6.0	19400	296	5740	1.35	JRTR99R59DN90L4
7.1	16200	249	6060	1.65	JRTRF99R59DN90L4
7.6	15100	234	6140	1.75	
8.5	13500	209	6200	1.95	
4.8	24600	370	5040	1.10	
5.1	23200	349	5260	1.15	JRTR99R59DN90L4
5.9	19700	297	5710	1.35	JRTRF99R59DN90L4
6.5	17800	270	5910	1.50	
7.8	15100	227	6140	1.75	
9.1	12900	195	3930	1.05	JRTR89R59DN90L4 JRTRF89R59DN90L4
4.7	26700	251.15	7830	1.40	
5.1	24500	229.95	8010	1.55	
5.8	21600	203.16	8140	1.75	JRTR109DN100L4
6.8	18300	172.34	8240	2.1	JRTRF109R59DN100L4
7.4	16900	158.68	8280	2.2	
8.3	15100	141.83	8330	2.5	
6.9	18200	255.71	5430	1.45	
7.3	17200	241.25	5740	1.55	
8.2	15400	216.28	6130	1.70	
9.5	13200	186.30	6210	2.0	
10	12100	170.02	6250	2.2	JRTR99DN90L4
12	10700	150.78	6290	2.5	JRTRF99R59DN90L4
14	9030	126.75	6340	2.9	
15	8300	116.48	6350	3.2	
17	7370	103.44	6370	3.6	
19	6590	92.48	6390	4.0	

Output speed n_a [r/min]	Output torque T_a lbf in	Ratio i	Permitted overhung load F_{Ra} [1] lbf	Service factor f_B	Model
2.0HP					
9.7	12900	181.77	3090	1.05	
11	11000	155.34	3780	1.25	
12	10100	142.41	4120	1.35	
14	8910	124.97	4450	1.55	
15	8440	118.43	4490	1.60	
17	7390	103.65	4490	1.85	
19	6650	93.38	4490	2.1	JRTR89DN90L4
22	5840	81.92	4490	2.4	JRTRF89DN90L4
24	5170	72.57	4490	2.6	
28	4540	63.68	4490	3.0	
29	4300	60.35	4490	3.2	
33	3760	52.82	4490	3.6	
37	3390	47.58	4450	4.0	
42	2970	41.74	4270	4.6	
48	2620	36.84	4110	5.2	
19	6630	92.97	2370	1.10	
22	5830	81.80	2510	1.25	
23	5500	77.24	2570	1.30	
27	4680	65.77	2680	1.55	
31	4110	57.68	2750	1.75	
34	3710	52.07	2790	1.95	JRTR79DN90L4
39	3260	45.81	2830	2.2	JRTRF79DN90L4
41	3080	43.26	2840	2.4	
48	2620	36.83	2830	2.8	
53	2380	33.47	2750	3.0	
61	2060	29.00	2640	3.5	
70	1790	25.23	2530	3.8	
76	1660	23.37	2470	4.3	JRTR79DN90L4
82	1520	21.43	2410	4.8	JRTRF79DN90L4
94	1340	18.80	2320	5.2	
25	4970	69.75	1790	1.05	
29	4360	61.26	1940	1.20	
31	4050	56.89	2010	1.30	
34	3670	51.56	2070	1.45	JRTR69DN90L4
38	3300	46.29	2140	1.60	JRTRF69DN90L4
44	2840	39.88	2200	1.80	
47	2670	37.50	2220	1.90	
55	2300	32.27	2190	2.1	
61	2050	28.83	2120	2.2	
63	2000	28.13	2110	2.4	
66	1900	26.72	2080	2.5	JRTR69DN90L4
75	1670	23.44	2000	3.0	JRTRF69DN90L4
89	1410	19.89	1910	3.7	
98	1280	17.95	1850	4.1	
33	3790	53.22	1330	1.05	
37	3430	48.23	1310	1.15	
41	3080	43.30	1280	1.30	JRTR59DN90L4
47	2650	37.30	1240	1.50	JRTRF59DN90L4
50	2500	35.07	1230	1.60	
59	2150	30.18	1190	1.85	
66	1920	26.97	1160	2.1	
67	1870	26.31	1150	2.1	
71	1780	24.99	1140	2.2	
81	1560	21.93	1100	2.5	
95	1320	18.60	1060	3.0	JRTR59DN90L4
105	1190	16.79	1030	3.3	JRTRF59DN90L4
120	1050	14.77	1000	3.6	
127	990	13.95	980	3.8	
149	840	11.88	940	4.2	



Output speed n_a [r/min]	Output torque T_a lbf in	Ratio i	Permitted overhung load F_{Ra} [1] lbf	Service factor f_B	Model
2.0HP					
48	2630	36.93	950	1.00	
51	2470	34.73	940	1.05	JRTR49DN90L4
59	2130	29.88	910	1.25	JRTRF49DN90L4
66	1900	26.70	890	1.40	
75	1680	23.59	870	1.60	
76	1660	23.28	870	1.60	
81	1550	21.81	860	1.70	
92	1370	19.27	830	1.90	
99	1270	17.89	820	2.0	
109	1150	16.22	800	2.1	
121	1030	14.56	775	2.3	
141	890	12.54	750	2.5	
150	840	11.79	735	2.6	JRTR49DN90L4
174	720	10.15	705	2.8	JRTRF49DN90L4
195	645	9.07	685	3.0	
221	570	8.01	665	3.2	
228	550	7.76	650	2.6	
254	495	6.96	630	2.8	
295	425	6.00	605	3.2	
313	400	5.64	595	3.4	
364	345	4.85	570	3.8	
407	305	4.34	550	4.2	
461	270	3.83	530	4.7	
72	1740	24.42	600	1.00	JRTR39DN90L4
					JRTRF39DN90L4
92	1370	19.31	720	1.30	
98	1280	18.05	750	1.40	
113	1110	15.60	745	1.60	
133	940	13.25	715	1.80	
149	840	11.83	700	1.90	
175	720	10.11	670	2.1	
187	675	9.47	660	2.2	JRTR39DN90L4
222	565	7.97	635	2.4	JRTRF39DN90L4
265	475	6.67	600	2.7	
312	400	5.67	575	3.1	
349	360	5.06	555	3.3	
409	305	4.32	530	3.6	
437	285	4.05	520	3.7	
518	240	3.41	495	4.1	
526	235	6.67	495	5.3	
619	200	5.67	470	6.2	
693	182	5.06	455	6.6	JRTR39DN90S2
811	155	4.32	435	7.2	JRTRF39DN90S2
866	145	4.05	425	7.4	
1030	123	3.41	405	8.1	
113	1110	15.63	470	1.05	
133	940	13.28	460	1.20	
149	840	11.86	450	1.35	
174	720	10.13	435	1.50	
217	580	8.16	405	1.75	JRTR29DN90L4
232	540	7.63	400	1.80	JRTRF29DN90L4
268	470	6.59	390	2.0	
316	395	5.60	375	2.2	
353	355	5.00	365	2.4	
414	300	4.27	350	2.5	
442	285	4.00	345	2.6	
524	240	3.37	330	2.9	
532	235	6.59	330	4.0	
626	200	5.60	315	4.3	
701	180	5.00	305	4.7	JRTR29DN90S2
821	154	4.27	295	5.0	JRTRF29DN90S2
876	144	4.00	285	5.2	
1040	121	3.37	275	5.8	

Output speed n_a [r/min]	Output torque T_a lbf in	Ratio i	Permitted overhung load F_{Ra} [1] lbf	Service factor f_B	Model
2.0HP					
232	540	7.63	1640	2.4	JRTRX89DN90L4
245	510	7.20	1610	2.4	JRTRXF89DN90L4
314	400	5.63	1170	2.4	
330	380	5.35	1150	2.4	
374	335	4.73	1110	3.2	
437	285	4.04	1060	4.4	
477	260	3.70	1030	5.1	JRTRX79DN90L4
544	230	3.25	990	7.0	JRTRXF79DN90L4
574	215	3.08	970	7.8	
656	192	2.70	930	9.9	
728	173	2.43	900	11	
390	320	4.53	755	2.2	
411	305	4.30	745	2.3	
468	265	3.77	715	2.9	
552	225	3.20	680	3.9	
612	205	2.89	660	4.5	JRTRX69DN90L4
695	181	2.54	635	5.8	JRTRXF69DN90L4
736	171	2.40	625	6.4	
865	146	2.04	595	8.1	
951	132	1.86	575	8.4	
1100	115	1.61	550	8.8	
1260	100	1.40	525	9.2	
466	270	3.79	570	2.3	
498	250	3.55	560	2.4	
563	220	3.14	540	2.6	
607	205	2.91	530	2.9	
669	188	2.64	515	3.2	JRTRX59DN90L4
745	169	2.37	500	3.6	JRTRXF59DN90L4
865	146	2.04	475	4.2	
920	137	1.92	470	4.5	
1070	118	1.65	445	5.2	
1195	105	1.48	430	5.7	
1355	93	1.30	415	6.0	
3.0HP					
1.1	157700	1674	27000	1.00	
1.2	138000	1485	27000	1.15	
1.3	123400	1342	27000	1.30	
1.4	114400	1229	27000	1.40	JRTR169R109DN100S4
1.6	102200	1111	27000	1.55	JRTRF169R109DN100S4
1.9	90200	950	27000	1.75	
2.0	81000	860	27000	1.95	
2.3	70900	763	27000	2.2	
2.6	63400	690	27000	2.5	
1.1	160300	1670	27000	1.00	
1.2	141000	1438	27000	1.15	
1.4	125400	1279	27000	1.25	
1.6	109200	1123	27000	1.45	JRTR169R109DN100S4
1.8	97100	999	27000	1.65	JRTRF169R109DN100S4
2.0	83700	861	27000	1.90	
2.3	74100	760	27000	2.1	
2.7	61400	656	27000	2.6	
3.3	51100	533	16300	2.2	
3.8	43900	462	16400	2.6	JRTR149R89DN100S4
4.1	41500	426	16400	2.8	JRTRF149R89DN100S4
4.8	35800	368	16500	3.2	
5.4	31700	326	16600	3.6	
1.5	114700	1166	14100	1.00	
1.7	101000	1029	14700	1.15	
2.0	87400	889	15300	1.30	
2.2	76900	784	15600	1.50	JRTR149R79DN100S4
2.5	68000	695	15900	1.70	JRTRF149R79DN100S4
2.8	61200	619	16000	1.90	
3.2	55000	558	16200	2.1	
3.6	48100	489	16300	2.4	
4.2	40800	415	16400	2.8	

Output speed n_a [r/min]	Output torque T_a lbf in	Ratio i	Permitted overhung load F_{Ra} [1] lbf	Service factor f_B	Model
3.0HP					
2.5	68800	699	12100	1.05	JRTR139R79DN100S4
2.9	59700	609	12500	1.20	JRTRF139R79DN100S4
2.4	71700	730	11900	1.00	
2.8	61500	629	12500	1.15	
3.1	55300	560	12700	1.30	
3.6	48000	490	13000	1.45	JRTR139R79DN100S4
4.1	41900	428	13200	1.70	JRTRF139R79DN100S4
4.6	37700	381	13300	1.90	
5.5	31900	323	13400	2.2	
6.0	28700	291	13500	2.5	
6.9	25100	255	13600	2.8	
7.9	22000	223	13600	3.2	
3.1	56800	564	12700	1.25	
3.4	52000	517	12900	1.35	
3.9	45500	453	13100	1.55	JRTR139R79DN100S4
4.7	37600	376	13300	1.90	JRTRF139R79DN100S4
5.2	33800	339	13400	2.1	
5.9	29600	297	13500	2.4	
4.8	36300	369	6840	1.05	
5.5	31800	323	7360	1.20	
6.2	28000	285	7730	1.35	JRTR109R79DN100S4
7.0	24700	253	7990	1.55	JRTRF109R79DN100S4
8.2	20900	214	8160	1.80	
9.4	18300	187	8250	2.1	
4.7	37800	377	6640	1.00	
5.4	32500	325	7290	1.15	
6.2	28400	284	7690	1.35	JRTR109R79DN100S4
6.9	25500	256	7930	1.50	JRTRF109R79DN100S4
8.0	21900	220	8130	1.75	
9.1	19100	193	8220	2.0	
10	17200	172	8270	2.2	
7.1	24700	249	5020	1.05	JRTR99R59DN100S4
7.5	23000	234	5280	1.15	JRTRF99R59DN100S4
8.4	20600	209	5600	1.30	
7.8	22800	227	5300	1.15	JRTR99R59DN100S4 JRTRF99R59DN100S4
5.8	32500	203.16	7290	1.15	
6.8	27600	172.34	7760	1.40	JRTR109DN112M6
7.4	25400	158.68	7940	1.50	JRTRF109DN112M6
8.3	22700	141.83	8110	1.65	
7.0	26900	251.15	7820	1.40	
7.7	24600	229.95	8000	1.55	
8.7	21700	203.16	8140	1.75	
10	18400	172.34	8240	2.1	
11	17000	158.68	8280	2.2	JRTR109DN100S4
12	15200	141.83	8330	2.5	JRTRF109DN100S4
14	13600	127.68	8360	2.8	
15	12400	115.63	8380	3.1	
17	10900	102.53	8310	3.5	
19	9940	92.70	8070	3.8	
8.2	23200	216.28	3940	1.15	
9.5	19900	186.30	4900	1.35	
10	18200	170.02	5430	1.45	
12	16100	150.78	6050	1.65	
14	13500	126.75	6200	1.95	JRTR99DN100S4
15	12400	116.48	6240	2.1	JRTRF99DN100S4
17	11000	103.44	6280	2.4	
19	9920	92.48	6320	2.7	
21	8910	83.15	6250	3.0	
24	7740	72.17	6000	3.4	

Output speed n_a [r/min]	Output torque T_a lbf in	Ratio i	Permitted overhung load F_{Ra} [1] lbf	Service factor f_B	Model
3.0HP					
27	6990	65.21	5830	3.8	
29	6420	59.92	5680	4.1	JRTR99DN100S4
33	5700	53.21	5490	4.7	JRTRF99DN100S4
37	5100	47.58	5310	5.2	
14	13400	124.97	2930	1.00	
15	12700	118.43	3190	1.10	
17	11100	103.65	3770	1.25	
19	10000	93.38	4170	1.35	
22	8780	81.92	4460	1.55	
24	7780	72.57	4490	1.75	JRTR89DN100S4
28	6830	63.68	4490	2.0	JRTRF89DN100S4
29	6470	60.35	4490	2.1	
33	5660	52.82	4480	2.4	
37	5100	47.58	4350	2.7	
42	4470	41.74	4190	3.1	
48	3950	36.84	4040	3.5	
54	3500	32.66	3900	3.9	
51	3690	34.40	3960	3.6	
56	3360	31.40	3850	4.1	JRTR89DN100S4
63	2980	27.84	3720	4.6	JRTRF89DN100S4
75	2510	23.40	3520	5.5	
82	2300	21.51	3440	5.8	
27	7050	65.77	2280	1.05	
31	6180	57.68	2450	1.15	
34	5580	52.07	2550	1.30	
38	4910	45.81	2650	1.50	JRTR79DN100S4
41	4640	43.26	2690	1.55	JRTRF79DN100S4
48	3950	36.83	2730	1.85	
53	3590	33.47	2660	2.0	
61	3110	29.00	2560	2.3	
70	2700	25.23	2470	2.5	
75	2500	23.37	2410	2.9	
82	2290	21.43	2360	3.2	
94	2010	18.80	2270	3.4	JRTR79DN100S4
99	1910	17.82	2230	3.6	JRTRF79DN100S4
113	1670	15.60	2150	3.9	
125	1500	14.05	2080	4.2	
38	4960	46.29	1800	1.05	
44	4270	39.88	1960	1.20	JRTR69DN100S4
47	4020	37.50	2010	1.25	JRTRF69DN100S4
55	3460	32.27	2100	1.40	
61	3090	28.83	2040	1.50	
75	2510	23.44	1940	1.95	
89	2130	19.89	1850	2.5	
98	1920	17.95	1800	2.7	
112	1690	15.79	1740	2.9	
118	1590	14.91	1710	3.0	JRTR69DN100S4
139	1360	12.70	1640	3.4	JRTRF69DN100S4
153	1230	11.54	1590	3.6	
176	1070	10.00	1530	3.9	
203	930	8.70	1460	4.2	
226	830	7.79	1420	4.0	
47	4000	37.30	1120	1.00	
50	3760	35.07	1110	1.05	JRTR59DN100S4
58	3230	30.18	1090	1.25	JRTRF59DN100S4
65	2890	26.97	1070	1.40	
80	2350	21.93	1030	1.70	
95	1990	18.60	1000	2.0	
105	1800	16.79	980	2.2	
119	1580	14.77	950	2.4	
126	1490	13.95	940	2.5	JRTR59DN100S4
148	1270	11.88	900	2.8	JRTRF59DN100S4
163	1150	10.79	880	3.0	
188	1000	9.35	850	3.3	
194	970	9.06	840	3.4	
221	850	7.97	810	3.7	



Output speed n_a [r/min]	Output torque T_a lbf in	Ratio i	Permitted overhung load F_{Ra} [1] lbf	Service factor f_B	Model
3.0HP					
75	2530	23.59	790	1.05	JRTR49DN100S4 JRTRF49DN100S4
91	2060	19.27	770	1.25	
109	1730	16.22	745	1.40	
121	1560	14.56	730	1.50	
140	1340	12.54	705	1.65	
149	1260	11.79	700	1.70	
174	1080	10.15	675	1.85	
194	970	9.07	655	2.0	
220	850	8.01	635	2.1	JRTR49DN100S4
227	830	7.76	620	1.75	JRTRF49DN100S4
253	745	6.96	605	1.90	
294	640	6.00	580	2.1	
312	605	5.64	575	2.3	
363	520	4.85	550	2.5	
406	465	4.34	535	2.8	
460	410	3.83	515	3.1	
113	1670	15.60	395	1.05	
133	1420	13.25	490	1.20	
149	1260	11.83	545	1.30	
174	1080	10.11	600	1.40	
186	1010	9.47	620	1.45	
221	850	7.97	600	1.60	JRTR39DN100S4
264	715	6.67	570	1.80	JRTRF39DN100S4
311	605	5.67	545	2.1	
348	540	5.06	530	2.2	
408	460	4.32	510	2.4	
435	430	4.05	505	2.5	
517	365	3.41	480	2.7	
529	355	6.67	480	3.6	
622	300	5.67	455	4.1	
697	270	5.06	445	4.4	JRTR39DN90L2
816	230	4.32	425	4.8	JRTRF39DN90L2
871	215	4.05	415	5.0	
1035	183	3.41	395	5.4	
174	1080	10.13	335	1.00	
267	705	6.59	320	1.35	
315	600	5.60	345	1.45	JRTR29DN100S4
352	535	5.00	340	1.55	JRTRF29DN100S4
413	455	4.27	330	1.70	
440	425	4.00	325	1.75	
523	360	3.37	315	1.95	
462	405	7.63	320	2.4	
535	350	6.59	310	2.6	
629	300	5.60	300	2.9	JRTR29DN90L2
705	265	5.00	290	3.1	JRTRF29DN90L2
825	225	4.27	280	3.4	
881	210	4.00	275	3.5	
1045	181	3.37	265	3.9	
373	505	4.73	1090	2.1	
436	430	4.04	1040	2.9	
476	395	3.70	1010	3.4	
542	345	3.25	970	4.6	
572	330	3.08	960	5.2	JRTRX79DN100S4
654	285	2.70	920	6.6	JRTRXF79DN100S4
726	260	2.43	890	7.3	
827	225	2.13	860	7.7	
937	200	1.88	820	8.2	
1055	179	1.67	790	8.6	
1240	153	1.42	755	9.0	
467	400	3.77	695	1.90	
551	340	3.20	660	2.6	
610	305	2.89	645	3.0	
693	270	2.54	620	3.8	JRTRX69DN100S4
734	255	2.40	610	4.2	JRTRXF69DN100S4
862	215	2.04	580	5.4	
949	199	1.86	565	5.6	
1095	173	1.61	540	5.8	
1260	150	1.40	520	6.1	

Output speed n_a [r/min]	Output torque T_a lbf in	Ratio i	Permitted overhung load F_{Ra} [1] lbf	Service factor f_B	Model
3.0HP					
562	335	3.14	520	1.70	
667	280	2.64	495	2.2	
743	250	2.37	480	2.4	
863	215	2.04	460	2.8	JRTRX59DN100S4
918	205	1.92	455	3.0	JRTRXF59DN100S4
1065	177	1.65	435	3.4	
1195	158	1.48	420	3.8	
1350	140	1.30	405	4.0	
4.0HP					
1.6	146900	1123	27000	1.10	
1.8	130700	999	27000	1.20	
2.0	112600	861	27000	1.40	JRTR169R99DN100L4
2.3	99600	760	27000	1.60	JRTRF169R99DN100L4
2.7	83500	656	27000	1.90	
3.5	64000	503	27000	2.5	
3.3	69000	533	15800	1.65	
3.8	59400	462	16100	1.95	
4.1	55800	426	16200	2.1	JRTR149R89DN100L4
4.8	48200	368	16300	2.4	JRTRF149R89DN100L4
5.4	42600	326	16400	2.7	
6.3	36000	280	16500	3.2	
2.0	117300	889	14000	1.00	
2.2	103300	784	14600	1.10	JRTR139R79DN100L4
2.5	91400	695	15100	1.25	JRTRF139R79DN100L4
2.9	82000	619	15500	1.40	
3.2	73800	558	15700	1.55	
3.6	64400	490	12300	1.10	
4.1	56200	428	12700	1.25	
4.6	50500	381	12900	1.40	
5.5	42800	323	13200	1.65	JRTR139R79DN100L4
6.0	38500	291	13300	1.85	JRTRF139R79DN100L4
6.9	33700	255	13400	2.1	
7.9	29500	223	13500	2.4	
3.4	69500	517	12100	1.00	
3.9	60900	453	12500	1.15	
7.0	33200	253	7210	1.15	JRTR109R79DN100L4
8.2	28200	214	7710	1.35	JRTRF109R79DN100L4
9.4	24600	187	8000	1.55	
6.9	34200	256	7100	1.10	JRTR109R79DN100L4 JRTRF109R79DN100L4
7.4	33900	158.68	7140	1.10	JRTR109DN132S6
8.3	30300	141.83	7510	1.25	JRTRF109DN132S6
9.2	27300	127.68	7790	1.40	
7.7	32800	229.95	7260	1.15	
8.7	29000	203.16	7640	1.30	
10	24600	172.34	8000	1.55	
11	22600	158.68	8110	1.70	
12	20200	141.83	8190	1.90	JRTR109DN100L4
14	18200	127.68	8250	2.1	JRTRF109DN100L4
15	16500	115.63	8290	2.3	
17	14600	102.53	8160	2.6	
19	13200	92.70	7930	2.9	
22	11200	78.57	7560	3.4	
24	10400	72.88	7390	3.6	
12	21500	150.78	4430	1.25	
14	18100	126.75	5460	1.45	
15	16600	116.48	5900	1.60	
17	14700	103.44	6160	1.80	
19	13200	92.48	6210	2.0	
21	11800	83.15	6100	2.2	JRTR99DN100L4
24	10300	72.17	5870	2.6	JRTRF99DN100L4
27	9320	65.21	5700	2.9	
29	8560	59.92	5570	3.1	
33	7600	53.21	5390	3.5	
37	6800	47.58	5220	3.9	
41	6110	42.78	5060	4.3	
47	5300	37.13	4850	5.0	
53	4750	33.25	4700	5.4	

Output speed n_a [r/min]	Output torque T_a lbf in	Ratio i	Permitted overhung load F_{Ra} [1] lbf	Service factor f_B	Model
4.0HP					
19	13300	93.38	2950	1.05	
22	11700	81.92	3550	1.15	
24	10300	72.57	4040	1.30	
28	9100	63.68	4430	1.50	
29	8620	60.35	4480	1.60	JRTR89DN100L4
33	7550	52.82	4360	1.80	JRTRF89DN100L4
37	6800	47.58	4240	2.0	
42	5960	41.74	4090	2.3	
48	5260	36.84	3960	2.6	
54	4660	32.66	3820	2.9	
63	3980	27.88	3650	3.3	
51	4910	34.40	3880	2.7	
56	4480	31.40	3780	3.1	
63	3980	27.84	3650	3.5	
75	3340	23.40	3470	4.1	JRTR89DN100L4
82	3070	21.51	3390	4.3	JRTRF89DN100L4
92	2730	19.10	3270	4.7	
103	2440	17.08	3160	5.0	
115	2190	15.35	3060	5.4	
38	6540	45.81	2380	1.10	
41	6180	43.26	2450	1.15	
48	5260	36.83	2600	1.40	JRTR79DN100L4
53	4780	33.47	2570	1.50	JRTRF79DN100L4
61	4140	29.00	2480	1.75	
70	3600	25.23	2400	1.90	
75	3340	23.37	2350	2.2	
82	3060	21.43	2300	2.4	
94	2680	18.80	2220	2.6	
99	2540	17.82	2190	2.7	
113	2220	15.60	2110	2.9	
125	2000	14.05	2040	3.2	JRTR79DN100L4
143	1760	12.33	1970	3.5	JRTRF79DN100L4
162	1550	10.88	1900	3.8	
183	1370	9.64	1830	4.0	
205	1220	8.59	1780	4.5	
228	1100	7.74	1730	4.9	
260	970	6.79	1660	5.3	
75	3350	23.44	1870	1.50	
89	2840	19.89	1790	1.85	
98	2560	17.95	1750	2.0	
112	2250	15.79	1690	2.2	JRTR69DN100L4
118	2130	14.91	1670	2.3	JRTRF69DN100L4
139	1810	12.70	1600	2.5	
153	1640	11.54	1560	2.7	
176	1420	10.00	1500	2.9	
65	3850	26.97	980	1.05	JRTR59DN100L4 JRTRF59DN100L4
80	3130	21.93	960	1.25	
95	2650	18.60	940	1.50	
105	2400	16.79	920	1.65	
119	2110	14.77	900	1.80	
126	1990	13.95	890	1.90	
148	1690	11.88	860	2.1	
163	1540	10.79	840	2.2	
189	1330	9.35	820	2.5	JRTR59DN100L4
195	1290	9.06	810	2.6	JRTRF59DN100L4
221	1130	7.97	790	2.8	
234	1070	7.53	775	2.9	
275	910	6.41	745	3.2	
303	830	5.82	725	3.4	
349	720	5.05	700	3.7	
402	625	4.39	675	4.0	

Output speed n_a [r/min]	Output torque T_a lbf in	Ratio i	Permitted overhung load F_{Ra} [1] lbf	Service factor f_B	Model
4.0HP					
109	2310	16.22	670	1.05	
121	2080	14.56	680	1.15	
141	1790	12.54	665	1.25	
149	1680	11.79	660	1.30	
174	1450	10.15	640	1.40	
194	1290	9.07	625	1.50	
220	1140	8.01	610	1.60	JRTR49DN100L4
227	1100	7.76	590	1.30	JRTRF49DN100L4
253	990	6.96	575	1.40	
294	850	6.00	560	1.60	
313	800	5.64	550	1.70	
363	690	4.85	530	1.90	
407	615	4.34	515	2.1	
460	545	3.83	500	2.3	
174	1440	10.11	340	1.05	
186	1350	9.47	380	1.10	
221	1130	7.97	455	1.20	
264	950	6.67	400	1.35	
311	800	5.67	455	1.55	JRTR39DN100L4
348	720	5.06	485	1.65	JRTRF39DN100L4
408	615	4.32	490	1.80	
436	575	4.05	485	1.85	
517	485	3.41	465	2.0	
527	475	6.67	465	2.7	
621	405	5.67	445	3.1	
695	360	5.06	430	3.3	JRTR39DN100L2
814	305	4.32	415	3.6	JRTRF39DN100L2
869	290	4.05	405	3.7	
1030	240	3.41	390	4.1	
315	800	5.60	193	1.10	
353	710	5.00	235	1.20	JRTR29DN100L4
413	610	4.27	280	1.25	JRTRF29DN100L4
441	570	4.00	295	1.30	
523	480	3.37	295	1.45	
534	470	6.59	295	2.0	
628	400	5.60	285	2.2	
703	355	5.00	280	2.4	JRTR29DN100L2
823	305	4.27	270	2.5	JRTRF29DN100L2
879	285	4.00	265	2.6	
1045	240	3.37	255	2.9	
373	675	4.73	1070	1.60	
436	575	4.04	1020	2.2	JRTRX79DN100L4
476	525	3.70	1000	2.6	JRTRXF79DN100L4
542	460	3.25	960	3.5	
572	440	3.08	940	3.9	
467	535	3.77	670	1.45	
551	455	3.20	645	1.95	
610	410	2.89	625	2.3	
694	360	2.54	605	2.9	
735	340	2.40	595	3.2	JRTRX69DN100L4
863	290	2.04	570	4.1	JRTRXF69DN100L4
949	265	1.86	550	4.2	
1095	225	1.61	530	4.4	
1260	200	1.40	510	4.6	
562	445	3.14	500	1.30	
668	375	2.64	480	1.60	
744	335	2.37	465	1.80	
864	290	2.04	450	2.1	JRTRX59DN100L4
918	270	1.92	440	2.2	JRTRXF59DN100L4
1065	235	1.65	425	2.6	
1195	210	1.48	410	2.9	
1350	186	1.30	395	3.0	



Output speed n_a [r/min]	Output torque T_a lbf in	Ratio i	Permitted overhung load F_{Ra} [1] lbf	Service factor f_B	Model
5.0HP					
1.9	154500	950	27000	1.05	JRTR169R109DN100L4 JRTRF169R109DN100L4
2.0	139200	860	27000	1.15	
2.3	122500	763	27000	1.30	
2.5	110100	690	27000	1.45	
3.0	92200	585	27000	1.75	
4.0	74000	446	27000	2.1	JRTR169R109DN100L4 JRTRF169R109DN100L4
4.4	66000	399	27000	2.4	
4.9	59300	361	27000	2.7	
5.4	53600	328	27000	3.0	
2.0	142000	861	27000	1.10	JRTR169R99DN100L4 JRTRF169R99DN100L4
2.3	125600	760	27000	1.25	
2.7	105900	656	27000	1.50	
3.5	81200	503	27000	1.95	
4.7	60800	376	27000	2.6	
5.2	54000	335	27000	2.9	
3.3	87200	533	15300	1.30	JRTR149R89DN100L4 JRTRF149R89DN100L4
3.8	75100	462	15700	1.55	
4.1	70400	426	15800	1.65	
4.8	60800	368	16100	1.90	
5.4	53700	326	16200	2.1	
6.3	45600	280	16400	2.5	
7.1	40200	247	16500	2.9	
2.5	115100	695	14100	1.00	JRTR149R79DN100L4 JRTRF149R79DN100L4
2.8	103100	619	14600	1.10	
3.1	92800	558	15100	1.25	
3.6	81300	489	15500	1.40	
4.2	68900	415	15800	1.65	
4.1	70800	428	12000	1.00	JRTR139R79DN100L4 JRTRF139R79DN100L4
4.6	63500	381	12400	1.10	
5.4	53800	323	12800	1.30	
6.0	48500	291	13000	1.45	
6.9	42300	255	13200	1.65	
7.9	37100	223	13300	1.90	
8.9	32700	197	13400	2.2	
10	28900	175	13500	2.4	
4.7	63400	376	12400	1.10	JRTR139R79DN100L4 JRTRF139R79DN100L4
5.2	57000	339	12700	1.25	
5.9	50000	297	12900	1.40	
8.2	35500	214	6950	1.05	JRTR109R79DN100L4 JRTRF109R79DN100L4
9.4	31000	187	7450	1.25	
8.0	37000	220	6760	1.05	JRTR109R79DN100L4 JRTRF109R79DN100L4
9.1	32400	193	7300	1.15	
10	29000	172	7630	1.30	
8.7	36400	203.16	6840	1.05	JRTR109DN100L4 JRTRF109DN100L4
10	30800	172.34	7460	1.25	
11	28400	158.68	7690	1.35	
12	25400	141.83	7940	1.50	
14	22800	127.68	8100	1.65	
15	20700	115.63	8170	1.85	
17	18300	102.53	8010	2.1	
19	16600	92.70	7790	2.3	
22	14000	78.57	7450	2.7	
24	13000	72.88	7290	2.9	
12	27000	150.78	2790	1.00	JRTR99DN100L4 JRTRF99DN100L4
14	22700	126.75	4080	1.15	
15	20800	116.48	4640	1.25	
17	18500	103.44	5340	1.45	
19	16500	92.48	5930	1.60	
21	14800	83.15	5950	1.80	
24	12900	72.17	5740	2.0	
27	11600	65.12	5590	2.3	
29	10700	59.92	5470	2.5	
33	9530	53.21	5290	2.8	

Output speed n_a [r/min]	Output torque T_a lbf in	Ratio i	Permitted overhung load F_{Ra} [1] lbf	Service factor f_B	Model
5.0HP					
37	8520	47.58	5130	3.1	JRTR99DN100L4 JRTRF99DN100L4
41	7660	42.78	4980	3.5	
47	6650	37.13	4790	4.0	
53	5950	33.25	4640	4.3	
24	13000	72.57	3080	1.05	JRTR89DN100L4 JRTRF89DN100L4
28	11400	63.68	3660	1.20	
29	10800	60.35	3860	1.25	
33	9460	52.82	4010	1.45	
37	8520	47.58	4100	1.60	
42	7480	41.74	4010	1.85	
48	6600	36.84	3880	2.1	
54	5850	32.66	3760	2.3	
63	4990	27.88	3600	2.7	
51	6160	34.40	3810	2.1	JRTR89DN100L4 JRTRF89DN100L4
56	5620	31.40	3720	2.4	
63	4980	27.84	3600	2.8	
75	4190	23.40	3420	3.3	
82	3850	21.51	3340	3.4	
92	3420	19.10	3230	3.7	
103	3060	17.08	3130	4.0	
114	2750	15.35	3030	4.3	
48	6600	36.83	2370	1.10	JRTR79DN100L4 JRTRF79DN100L4
53	5990	33.47	2480	1.20	
61	5190	29.00	2410	1.40	
70	4520	25.23	2330	1.55	
75	4180	23.37	2290	1.75	JRTR79DN100L4 JRTRF79DN100L4
82	3830	21.43	2240	1.90	
93	3360	18.80	2170	2.0	
99	3190	17.82	2140	2.2	
113	2790	15.60	2070	2.3	
125	2510	14.05	2010	2.5	
143	2200	12.33	1940	2.8	
162	1940	10.88	1870	3.0	
182	1720	9.64	1810	3.2	
205	1530	8.59	1760	3.6	
227	1380	7.74	1710	3.9	
259	1210	6.79	1640	4.2	
75	4200	23.44	1800	1.20	JRTR69DN100L4 JRTRF69DN100L4
88	3560	19.89	1740	1.50	
98	3210	17.95	1700	1.60	
111	2830	15.79	1650	1.75	
118	2670	14.91	1620	1.80	
138	2270	12.70	1560	2.0	
152	2060	11.54	1520	2.1	
176	1790	10.00	1470	2.3	
202	1550	8.70	1410	2.5	
226	1390	7.79	1370	2.4	
239	1310	7.36	1350	2.5	
281	1120	6.27	1290	2.6	
309	1020	5.70	1260	2.7	
356	880	4.93	1210	2.9	
80	3920	21.93	890	1.00	JRTR59DN100L4 JRTRF59DN100L4
95	3330	18.60	880	1.20	
105	3000	16.79	870	1.30	
119	2640	14.77	850	1.45	
126	2490	13.95	840	1.50	
148	2120	11.88	820	1.70	
163	1930	10.79	810	1.80	
188	1670	9.35	785	1.95	
194	1620	9.06	785	2.0	
221	1420	7.97	765	2.2	
234	1340	7.53	755	2.3	
274	1140	6.41	725	2.6	
302	1040	5.82	710	2.7	
348	900	5.05	685	3.0	
400	785	4.39	660	3.1	

Output speed n_a [r/min]	Output torque T_a lbf · in	Ratio i	Permitted overhung load F_{Ra} [1] lbf	Service factor f_B	Model
5.0HP					
140	2240	12.54	545	1.00	
149	2110	11.79	590	1.05	
173	1810	10.15	605	1.10	
194	1620	9.07	595	1.20	
219	1430	8.01	585	1.25	JRTR49DN100L4
227	1380	7.76	560	1.05	JRTRF49DN100L4
252	1240	6.96	550	1.15	
293	1070	6.00	535	1.30	
312	1010	5.64	530	1.35	
362	860	4.85	515	1.55	
405	775	4.34	500	1.65	
459	685	3.83	485	1.85	
438	715	8.01	505	2.5	JRTR49DN100L2
452	695	7.76	490	2.1	JRTRF49DN100L2
504	625	6.96	475	2.2	
264	1190	6.67	197	1.05	
310	1010	5.67	285	1.25	
348	900	5.06	335	1.30	JRTR39DN100L4
407	770	4.32	390	1.45	JRTRF39DN100L4
434	725	4.05	410	1.50	
516	610	3.41	445	1.60	
371	850	9.47	465	1.75	
440	715	7.97	470	1.95	
526	595	6.67	445	2.1	
619	505	5.67	430	2.5	JRTR39DN100L2
693	450	5.06	420	2.6	JRTRF39DN100L2
812	385	4.32	405	2.9	
867	360	4.05	400	3.0	
1030	305	3.41	380	3.2	
412	765	4.27	148	1.00	
440	715	4.00	172	1.05	JRTR29DN100L4
522	600	3.37	225	1.15	JRTRF29DN100L4
532	590	6.59	230	1.60	
626	500	5.60	265	1.75	
702	445	5.00	265	1.85	JRTR29DN100L2
821	380	4.27	260	2.0	JRTRF29DN100L2
877	355	4.00	255	2.1	
1040	300	3.37	245	2.3	
372	840	4.73	1040	1.30	
435	720	4.04	1000	1.75	JRTRX79DN100L4
475	660	3.70	980	2.0	JRTRXF79DN100L4
541	580	3.25	940	2.8	
571	550	3.08	930	3.1	
466	675	3.77	650	1.15	
549	570	3.20	625	1.55	
609	515	2.89	610	1.80	JRTRX69DN100L4
692	455	2.54	590	2.3	JRTRXF69DN100L4
732	430	2.40	580	2.5	
860	365	2.04	555	3.2	
947	330	1.86	540	3.4	
1095	285	1.61	520	3.5	
1255	250	1.40	500	3.7	

Output speed n_a [r/min]	Output torque T_a lbf · in	Ratio i	Permitted overhung load F_{Ra} [1] lbf	Service factor f_B	Model
5.0HP					
561	560	3.14	480	1.00	
666	470	2.64	460	1.30	
742	420	2.37	450	1.45	JRTRX59DN100L4
861	365	2.04	435	1.65	JRTRXF59DN100L4
916	340	1.92	425	1.75	
1065	295	1.65	410	2.1	
1190	260	1.48	400	2.3	
1350	230	1.30	385	2.4	
5.4HP					
2.1	149800	860	27000	1.05	
2.3	131900	763	27000	1.20	JRTR169R109DN112M4
2.6	118600	690	27000	1.35	JRTRF169R109DN112M4
3.0	99400	585	27000	1.60	
4.0	79600	446	27000	2.0	
4.4	71000	399	27000	2.2	JRTR169R109DN112M4
4.9	63800	361	27000	2.5	JRTRF169R109DN112M4
5.4	57700	328	27000	2.8	
2.0	152700	861	27000	1.05	
2.3	135000	760	27000	1.20	
2.7	114000	656	27000	1.40	JRTR169R99DN112M4
3.5	87400	503	27000	1.80	JRTRF169R99DN112M4
4.7	65400	376	27000	2.4	
5.3	58200	335	27000	2.7	
3.3	93800	533	15000	1.25	
3.8	80800	462	15500	1.40	
4.2	75600	426	15700	1.50	
4.8	65300	368	15900	1.75	
5.4	57800	326	16100	2.0	JRTR149R89DN112M4
6.3	49000	280	16300	2.3	JRTRF149R89DN112M4
7.2	43200	247	16400	2.7	
8.3	37300	214	16500	3.1	
9.4	33000	189	16600	3.5	
11	27700	159	16600	4.1	
2.9	110800	619	14300	1.05	
3.2	99700	558	14800	1.15	JRTR149R79DN112M4
3.6	87300	489	15300	1.30	JRTRF149R79DN112M4
4.3	74000	415	15700	1.55	
4.6	68200	381	12100	1.05	
5.5	57800	323	12600	1.20	
6.1	52100	291	12900	1.35	JRTR139R79DN112M4
6.9	45500	255	13100	1.55	JRTRF139R79DN112M4
7.9	39800	223	13300	1.75	
9.0	35100	197	13400	2.0	
10	31100	175	13500	2.3	
4.7	68100	376	12100	1.05	JRTR139R79DN112M4
5.2	61300	339	12500	1.15	JRTRF139R79DN112M4
6.0	53700	297	12800	1.30	
8.2	38100	214	6600	1.00	JRTR109R79DN112M4
9.4	33300	187	7200	1.15	JRTRF109R79DN112M4
9.1	38400	193	7030	1.10	JRTR109R79DN112M4
10	31200	172	7430	1.20	JRTRF109R79DN112M4



Output speed n_a [r/min]	Output torque T_a lbf · in	Ratio i	Permitted overhung load F_{Ra} [1] lbf	Service factor f_B	Model
5.4HP					
5.3	64100	222.60	12300	1.10	
6.3	54200	188.45	12800	1.30	
6.8	50200	174.40	12900	1.40	
7.6	45000	156.31	13100	1.55	JRTR139DN132S6
8.4	40600	141.12	13200	1.75	JRTRF139DN132S6
9.2	36900	128.18	13300	1.90	
10	32700	113.72	13400	2.2	
11	29700	103.20	13500	2.4	
13	25500	88.70	13600	2.8	
10	33100	172.34	7230	1.15	
11	30500	158.68	7500	1.25	
12	27200	141.83	7790	1.40	
14	24500	127.68	8010	1.55	
15	22200	115.63	8120	1.70	
17	19700	102.53	7940	1.95	JRTR109DN112M4
19	17800	92.70	7730	2.1	JRTRF109DN112M4
23	15100	78.57	7390	2.5	
24	14000	72.88	7230	2.7	
27	12600	65.60	7020	3.0	
30	11400	59.41	6830	3.3	
34	10100	52.68	6590	3.8	
14	24300	126.75	3580	1.10	
15	22400	116.48	4180	1.20	
17	19800	103.44	4930	1.35	
19	17700	92.48	5560	1.50	
21	15900	83.15	5880	1.65	
25	13800	72.17	5680	1.90	JRTR99DN112M4
27	12500	65.21	5530	2.1	JRTRF99DN112M4
30	11500	59.92	5410	2.3	
33	10200	53.21	5250	2.6	
37	9150	47.58	5090	2.9	
41	8220	42.78	4940	3.2	
48	7140	37.13	4750	3.7	
53	6390	33.25	4610	4.0	
55	6160	32.05	4560	3.7	
65	5220	27.19	4350	4.3	
71	4810	25.03	4240	5.2	JRTR97DN112M4
79	4300	22.37	4100	5.6	JRTRF97DN112M4
88	3870	20.14	3980	6.0	
28	12200	63.68	3360	1.10	
29	11600	60.35	3550	1.20	
33	10100	52.82	3740	1.35	
37	9150	47.58	3860	1.50	JRTR89DN112M4
42	8020	41.74	3960	1.70	JRTRF89DN112M4
48	7080	36.84	3840	1.95	
54	6280	32.66	3720	2.2	
63	5360	27.88	3570	2.5	
51	6610	34.40	3770	2.0	
56	6030	31.40	3680	2.3	
64	5350	27.84	3560	2.6	
76	4500	23.40	3400	3.0	JRTR89DN112M4
82	4130	21.51	3320	3.2	JRTRF89DN112M4
93	3670	19.10	3210	3.5	
104	3280	17.08	3110	3.7	

Output speed n_a [r/min]	Output torque T_a lbf · in	Ratio i	Permitted overhung load F_{Ra} [1] lbf	Service factor f_B	Model
5.4HP					
115	2950	15.35	3010	4.0	JRTR89DN112M4
133	2560	13.33	2890	4.4	JRTRF89DN112M4
148	2290	11.93	2790	4.7	
48	7080	36.83	2270	1.00	
53	6430	33.47	2400	1.15	JRTR79DN112M4
61	5570	29.00	2370	1.30	JRTRF79DN112M4
70	4850	25.23	2300	1.40	
76	4490	23.37	2260	1.60	
83	4120	21.43	2210	1.75	
94	3610	18.80	2140	1.90	
99	3420	17.82	2120	2.0	
113	2990	15.60	2050	2.2	
126	2700	14.05	1990	2.4	
144	2370	12.33	1920	2.6	JRTR79DN112M4
163	2090	10.88	1860	2.8	JRTRF79DN112M4
183	1850	9.64	1800	3.0	
206	1650	8.59	1750	3.4	
229	1480	7.74	1700	3.6	
260	1300	6.79	1640	3.9	
295	1150	5.99	1580	4.2	
333	1020	5.31	1520	4.4	
89	3820	19.89	1710	1.40	
99	3450	17.95	1670	1.50	
112	3030	15.79	1630	1.65	
119	2860	14.91	1600	1.70	
139	2440	12.70	1540	1.90	
153	2210	11.54	1510	2.0	
177	1920	10.00	1450	2.2	JRTR69DN112M4
203	1670	8.70	1400	2.3	JRTRF69DN112M4
227	1490	7.79	1360	2.2	
240	1410	7.36	1340	2.3	
282	1200	6.27	1280	2.4	
311	1090	5.70	1250	2.5	
359	940	4.93	1200	2.7	
412	820	4.29	1150	2.9	
95	3570	18.60	850	1.10	
105	3220	16.79	840	1.25	
120	2840	14.77	830	1.35	
127	2680	13.95	830	1.40	
149	2280	11.88	810	1.55	
164	2070	10.79	795	1.65	
189	1790	9.35	775	1.80	JRTR59DN112M4
195	1740	9.06	770	1.90	JRTRF59DN112M4
222	1530	7.97	750	2.0	
235	1440	7.53	745	2.1	
276	1230	6.41	715	2.4	
304	1120	5.82	700	2.5	
351	970	5.05	675	2.8	
403	840	4.39	655	2.9	
446	760	7.97	635	4.1	
472	720	7.53	625	4.3	
554	610	6.41	600	4.8	JRTR59DN112M2
610	555	5.82	585	5.1	JRTRF59DN112M2
704	480	5.05	560	5.6	
809	420	4.39	540	5.9	

Output speed n_a [r/min]	Output torque T_a lbf · in	Ratio i	Permitted overhung load F_{Ra} [1] lbf	Service factor f_B	Model
5.4HP					
174	1950	10.15	590	1.05	JRTR49DN112M4 JRTRF49DN112M4
195	1740	9.07	585	1.10	
221	1540	8.01	575	1.20	
254	1330	6.96	540	1.05	
295	1150	6.00	525	1.20	
314	1080	5.64	520	1.25	
364	930	4.85	505	1.40	
408	830	4.34	495	1.55	
462	735	3.83	480	1.75	
458	740	7.76	480	1.95	JRTR49DN112M2 JRTRF49DN112M2
510	665	6.96	470	2.1	
592	570	6.00	455	2.4	
630	540	5.64	445	2.5	
732	460	4.85	430	2.9	
819	415	4.34	420	3.1	
927	365	3.83	405	3.5	
438	775	4.04	990	1.65	JRTR79DN112M4 JRTRF79DN112M4
478	710	3.70	970	1.90	
544	625	3.25	930	2.6	
574	590	3.08	920	2.9	
656	515	2.70	890	3.7	
728	465	2.43	860	4.1	
830	405	2.13	830	4.3	
941	360	1.88	795	4.6	
1060	320	1.67	770	4.8	
1245	270	1.42	735	5.0	
553	615	3.20	615	1.45	JRTRX69DN112M4 JRTRXF69DN112M4
612	555	2.89	600	1.70	
696	485	2.54	580	2.1	
737	460	2.40	575	2.4	
866	390	2.04	550	3.0	
953	355	1.86	535	3.1	
1100	305	1.61	515	3.3	
1265	265	1.40	495	3.4	
670	505	2.64	455	1.20	JRTRX59DN112M4 JRTRXF59DN112M4
746	455	2.37	440	1.35	
866	390	2.04	425	1.55	
921	365	1.92	420	1.65	
1070	315	1.65	405	1.90	
1200	280	1.48	395	2.1	
1355	250	1.30	380	2.2	
7.5HP					
3.0	140600	585	27000	1.15	JRTR169R109DN132S4
3.5	121800	511	27000	1.30	JRTRF169R109DN132S4
5.1	81400	349	27000	1.95	JRTR169R109DN132S4 JRTRF169R109DN132S4
6.5	64500	270	27000	2.5	
7.7	54100	229	27000	2.9	
4.0	111400	446	27000	1.45	JRTR169R109DN132S4 JRTRF169R109DN132S4
4.4	99500	399	27000	1.60	
4.9	89600	361	27000	1.80	
5.4	81100	328	27000	1.95	
6.1	71600	291	27000	2.2	
6.7	64700	264	27000	2.5	
7.8	55200	227	27000	2.9	

Output speed n_a [r/min]	Output torque T_a lbf · in	Ratio i	Permitted overhung load F_{Ra} [1] lbf	Service factor f_B	Model
7.5HP					
2.7	160300	656	27000	1.00	JRTR169R99DN132S4 JRTRF169R99DN132S4
3.0	139800	579	27000	1.15	
3.5	122900	503	27000	1.30	
4.1	104300	432	27000	1.55	
4.7	92000	376	27000	1.75	
5.3	81800	335	27000	1.95	
5.8	73000	303	27000	2.2	
6.3	67300	279	27000	2.4	
3.8	113400	462	14200	1.00	JRTR149R89DN132S4 JRTRF149R89DN132S4
4.2	105700	426	14500	1.10	
4.8	91300	368	15100	1.25	
5.4	80700	326	15500	1.40	
6.3	68800	280	15900	1.65	
7.2	60700	247	16100	1.90	
8.3	52400	214	16200	2.2	
9.4	46400	189	16400	2.5	
11	38900	159	16500	3.0	
4.3	103300	415	14600	1.10	JRTR149R79DN132S4 JRTRF149R79DN132S4
6.9	63500	255	12400	1.10	JRTR139R79DN132S4 JRTRF139R79DN132S4
7.9	55600	223	12700	1.25	
9.0	49000	197	13000	1.45	
10	43400	175	13100	1.65	
7.3	65100	163.31	15900	1.75	JRTR149DN132L6 JRTRF149DN132L6
8.1	58500	146.91	16100	1.95	
9.9	47700	119.86	16300	2.4	
11	43500	109.31	16400	2.6	
13	37700	94.60	16500	3.0	
14	33200	83.47	16600	3.5	
6.8	69500	174.40	12100	1.00	JRTR139DN132L6 JRTRF139DN132L6
7.6	62300	156.31	12400	1.15	
8.4	56200	141.12	12700	1.25	
9.2	51100	128.18	12900	1.40	
10	45300	113.72	13100	1.55	
11	41100	103.20	13200	1.70	
7.9	59400	222.60	12600	1.20	JRTR139DN132S4 JRTRF139DN132S4
9.4	50300	188.45	12900	1.40	
10	46600	174.40	13000	1.50	
11	41700	156.31	13200	1.70	
13	37700	141.12	13300	1.90	
14	34200	128.18	13400	2.1	
16	30300	113.72	13500	2.3	
17	27500	103.20	13500	2.6	
20	23700	88.70	13600	3.0	
22	21600	80.91	13600	3.3	
24	19600	73.49	13700	3.6	
27	17400	65.20	13700	4.1	
30	15800	59.17	13700	4.5	
35	13500	50.86	13700	5.2	



Output speed n_a [r/min]	Output torque T_a lbf · in	Ratio i	Permitted overhung load F_{Ra} [1] lbf	Service factor f_B	Model
7.5HP					
12	37900	141.83	6640	1.00	
14	34100	127.68	7110	1.10	
15	30900	115.63	7460	1.25	
17	27400	102.53	7610	1.40	
19	24700	92.70	7430	1.55	
22	21000	78.57	7140	1.80	JRTR109DN132S4
24	19400	72.88	7000	1.95	JRTRF109DN132S4
27	17500	65.60	6820	2.2	
30	15800	59.41	6640	2.4	
34	14000	52.68	6430	2.7	
37	12700	47.63	6250	3.0	
44	10700	40.37	5970	3.5	
19	24700	92.48	3480	1.05	
21	22200	83.15	4230	1.20	
24	19200	72.17	5110	1.40	
27	17400	65.21	5280	1.50	
30	16000	59.92	5190	1.65	JRTR99DN132S4
33	14200	53.21	5040	1.85	JRTRF99DN132S4
37	12700	47.58	4910	2.1	
41	11400	42.78	4780	2.3	
48	9920	37.13	4610	2.7	
53	8880	33.25	4480	2.9	
64	7370	27.58	4260	3.2	
55	8560	32.05	4440	2.6	
65	7260	27.19	4240	3.1	
71	6690	25.03	4150	3.7	
79	5980	22.37	4020	4.0	JRTR99DN132S4
88	5380	20.14	3900	4.3	JRTRF99DN132S4
97	4870	18.24	3790	4.5	
109	4320	16.17	3660	4.9	
37	12700	47.58	3880	1.10	
42	11100	41.74	3770	1.25	
48	9840	36.84	3670	1.40	JRTR89DN132S4
54	8720	32.66	3570	1.55	JRTRF89DN132S4
63	7450	27.88	3440	1.80	
64	7440	27.84	3440	1.85	
76	6250	23.40	3290	2.2	
82	5740	21.51	3220	2.3	
93	5100	19.10	3120	2.5	
104	4560	17.08	3030	2.7	
115	4100	15.35	2940	2.9	JRTR89DN132S4
133	3560	13.33	2830	3.2	JRTRF89DN132S4
148	3180	11.93	2740	3.4	
179	2640	9.90	2600	4.0	
193	2440	9.14	2560	4.4	
215	2190	8.22	2480	4.7	
248	1900	7.13	2380	5.0	
70	6740	25.23	1950	1.00	JRTR79DN132S4 JRTRF79DN132S4
94	5020	18.80	2040	1.35	
99	4760	17.82	2020	1.45	
113	4160	15.60	1960	1.55	JRTR79DN132S4
126	3750	14.05	1910	1.70	JRTRF79DN132S4
143	3290	12.33	1850	1.85	

Output speed n_a [r/min]	Output torque T_a lbf · in	Ratio i	Permitted overhung load F_{Ra} [1] lbf	Service factor f_B	Model
7.5HP					
163	2900	10.88	1800	2.0	
183	2570	9.64	1740	2.2	
206	2290	8.59	1710	2.4	
228	2060	7.74	1660	2.6	JRTR79DN132S4
260	1810	6.79	1600	2.8	JRTRF79DN132S4
295	1600	5.99	1550	3.0	
333	1410	5.31	1490	3.2	
112	4220	15.79	1530	1.15	
119	3980	14.91	1510	1.20	
139	3390	12.70	1460	1.35	
153	3080	11.54	1440	1.45	
177	2670	10.00	1390	1.55	JRTR69DN132S4
203	2320	8.70	1350	1.65	JRTRF69DN132S4
227	2080	7.79	1320	1.60	
240	1960	7.36	1300	1.65	
282	1670	6.27	1250	1.75	
310	1520	5.70	1210	1.80	
358	1310	4.93	1170	1.95	
412	1140	4.29	1120	2.1	
127	3720	13.95	675	1.00	
149	3170	11.88	725	1.15	
164	2880	10.79	720	1.20	
189	2490	9.35	710	1.30	
222	2130	7.97	700	1.45	JRTR59DN132S4
235	2010	7.53	695	1.55	JRTRF59DN132S4
276	1710	6.41	675	1.75	
304	1550	5.82	660	1.80	
350	1340	5.05	645	2.0	
403	1170	4.39	625	2.1	
240	1960	14.77	685	1.95	
254	1860	13.95	680	2.0	
298	1580	11.88	660	2.3	
328	1430	10.79	650	2.4	
379	1240	9.35	630	2.6	JRTR59DN132S2
445	1060	7.97	610	3.0	JRTRF59DN132S2
471	1000	7.53	600	3.1	
553	850	6.41	580	3.5	
608	775	5.82	565	3.6	
702	670	5.05	545	4.0	
807	585	4.39	525	4.2	
364	1290	4.85	465	1.00	
408	1150	4.34	460	1.10	JRTR49DN132S4
461	1020	3.83	450	1.25	JRTRF49DN132S4
283	1670	12.54	495	1.30	
300	1570	11.79	500	1.40	
349	1350	10.15	490	1.50	
391	1200	9.07	480	1.60	
442	1060	8.01	470	1.70	JRTR49DN132S2
591	795	6.00	430	1.75	JRTRF49DN132S2
628	750	5.64	425	1.80	
730	645	4.85	410	2.0	
817	575	4.34	400	2.2	
925	510	3.83	390	2.5	

Output speed n_a [r/min]	Output torque T_a lbf · in	Ratio i	Permitted overhung load F_{Ra} [1] lbf	Service factor f_B	Model
7.5HP					
267	1770	6.63	2210	2.3	
315	1490	5.61	2110	2.7	JRTRX109DN132S4
341	1380	5.19	2060	4.4	JRTRXF109DN132S4
380	1240	4.65	2000	5.0	
305	1540	5.79	1770	2.4	
360	1310	4.91	1690	2.7	
391	1200	4.52	1650	4.3	
437	1080	4.04	1600	4.9	
486	970	3.64	1550	5.4	
536	880	3.30	1510	6.0	JRTRX99DN132S4
605	780	2.92	1450	6.7	JRTRXF99DN132S4
669	705	2.64	1410	7.5	
789	595	2.24	1340	8.8	
904	520	1.96	1290	9.6	
1080	435	1.64	1220	10	
1250	375	1.42	1160	11	
393	1200	4.50	1280	2.1	
467	1010	3.78	1220	2.7	
509	920	3.48	1200	3.9	JRTRX89DN132S4
573	820	3.09	1160	4.3	JRTRXF89DN132S4
641	735	2.76	1120	4.9	
712	660	2.48	1090	5.4	
821	575	2.15	1040	5.9	
544	860	3.25	900	1.85	
574	820	3.08	890	2.1	
656	720	2.70	860	2.6	
728	645	2.43	830	2.9	JRTRX79DN132S4
830	565	2.13	800	3.1	JRTRXF79DN132S4
940	500	1.88	775	3.3	
1060	445	1.67	750	3.4	
1240	380	1.42	715	3.6	
696	675	2.54	550	1.55	
737	640	2.40	545	1.70	
865	545	2.04	520	2.2	JRTRX69DN132S4
952	495	1.86	510	2.2	JRTRXF69DN132S4
1100	425	1.61	490	2.4	
1265	370	1.40	475	2.5	
866	545	2.04	250	1.10	
921	510	1.92	265	1.20	JRTRX59DN132S4
1070	440	1.65	295	1.40	JRTRXF59DN132S4
1200	390	1.48	305	1.50	
1355	345	1.30	325	1.60	
10.0HP					
5.1	110200	349	27000	1.45	
6.6	86800	270	27000	1.85	JRTR169R109DN132M4
7.7	73100	229	27000	2.2	JRTRF169R109DN132M4
8.8	63400	200	27000	2.5	
4.0	148700	446	27000	1.05	
4.4	133000	399	27000	1.20	
4.9	119800	361	27000	1.35	JRTR169R109DN132M4
5.4	108500	328	27000	1.45	JRTRF169R109DN132M4
6.1	95900	291	27000	1.65	
6.7	86700	264	27000	1.85	
7.8	74100	227	27000	2.1	

Output speed n_a [r/min]	Output torque T_a lbf · in	Ratio i	Permitted overhung load F_{Ra} [1] lbf	Service factor f_B	Model
10.0HP					
9.0	64300	198	27000	2.5	JRTR169R109DN132M4
11	54100	168	27000	2.9	JRTRF169R109DN132M4
4.1	140100	432	27000	1.15	
4.7	123100	376	27000	1.30	JRTR169R99DN132M4
5.3	109600	335	27000	1.45	JRTRF169R99DN132M4
5.9	98100	303	27000	1.60	
6.4	90400	279	27000	1.75	
5.4	107700	326	14400	1.05	
6.3	92000	280	15100	1.25	
7.2	81200	247	15500	1.40	JRTR149R89DN132M4
8.3	70100	214	15800	1.65	JRTRF149R89DN132M4
9.4	62000	189	16000	1.85	
11	52100	159	16200	2.2	
9.0	65300	197	12300	1.10	JRTR139R79DN132M4
10	57900	175	12600	1.20	JRTRF139R79DN132M4
5.2	122400	229.71	27000	1.30	
6.3	99600	186.93	27000	1.60	
7.7	81500	153.07	27000	1.95	
8.4	74600	139.98	27000	2.1	
9.7	64900	121.81	27000	2.5	JRTR169DN160M6
11	57200	107.49	27000	2.8	JRTRF169DN160M6
13	49600	93.19	27000	3.2	
14	44100	82.19	27000	3.6	
16	39200	73.70	27000	4.0	
18	35900	67.40	27000	4.4	
7.2	87000	163.31	15300	1.30	
8.1	78300	146.91	15600	1.45	
9.9	63800	119.86	16000	1.80	JRTR149DN160M6
11	58200	109.31	16100	1.95	JRTRF149DN160M6
12	50400	94.60	16300	2.3	
14	44400	83.47	16400	2.6	
9.4	66900	188.45	12200	1.05	
10	61900	174.40	12400	1.15	
11	55500	156.31	12700	1.30	
13	50100	141.12	12900	1.40	
14	45500	128.18	13100	1.55	
16	40300	113.72	13200	1.75	JRTR139DN132M4
17	36600	103.20	13300	1.95	JRTRF139DN132M4
20	31500	88.70	13500	2.2	
22	28700	80.91	13500	2.5	
24	26100	73.49	13600	2.7	
27	23100	65.20	13600	3.1	
30	21000	59.17	13600	3.4	
35	18000	50.86	13700	3.9	
17	36400	102.53	6840	1.05	
19	32900	92.70	7080	1.15	
23	27900	78.57	6840	1.35	
24	25800	72.88	6720	1.45	
27	23200	65.60	6560	1.65	JRTR109DN132M4
30	21000	59.41	6410	1.80	JRTRF109DN132M4
34	18700	52.68	6230	2.0	
37	16900	47.63	6070	2.2	
44	14300	40.37	5810	2.6	
50	12500	35.26	5610	3.0	
60	10400	29.49	5340	3.6	



Output speed n_a [r/min]	Output torque T_a lbf · in	Ratio i	Permitted overhung load F_{Ra} [1] lbf	Service factor f_B	Model
10.0HP					
58	10900	30.77	5400	3.5	JRTR109DN132M4 JRTRF109DN132M4
64	9790	27.58	5240	3.9	
71	8840	24.90	5090	4.3	
78	8030	22.62	4950	4.7	
25	25600	72.17	3210	1.05	JRTR99DN132M4 JRTRF99DN132M4
27	23100	65.21	4980	1.15	
30	21200	59.92	4910	1.25	
33	18800	53.21	4800	1.40	
37	16800	47.58	4690	1.55	
41	15100	42.78	4580	1.75	
48	13100	37.13	4440	2.0	
53	11800	33.25	4320	2.2	
64	9790	27.58	4130	2.4	
55	11300	32.05	4290	2.0	JRTR99DN132M4 JRTRF99DN132M4
65	9650	27.19	4110	2.4	
71	8890	25.03	4030	2.8	
79	7940	22.37	3910	3.0	
88	7150	20.14	3800	3.2	
97	6470	18.24	3700	3.4	
48	13000	36.84	3470	1.05	JRTR89DN132M4 JRTRF89DN132M4
54	11500	32.66	3390	1.20	
64	9900	27.88	3280	1.35	
64	9880	27.84	3280	1.40	JRTR89DN132M4 JRTRF89DN132M4
76	8310	23.40	3160	1.65	
82	7630	21.51	3100	1.75	
93	6780	19.10	3010	1.90	
104	6060	17.08	2930	2.0	
116	5450	15.35	2860	2.2	
133	4730	13.33	2750	2.4	
149	4230	11.93	2670	2.6	
179	3510	9.90	2540	3.0	
194	3240	9.14	2520	3.3	
216	2910	8.22	2440	3.5	
249	2530	7.13	2340	3.7	
278	2260	6.39	2270	4.0	
335	1880	5.30	2140	4.3	
94	6670	18.80	1540	1.05	JRTR79DN132M4 JRTRF79DN132M4
100	6320	17.82	1600	1.10	
114	5530	15.60	1740	1.20	
126	4990	14.05	1820	1.30	
144	4370	12.33	1770	1.40	
163	3860	10.88	1720	1.50	
184	3420	9.64	1680	1.65	
206	3050	8.59	1660	1.85	
229	2740	7.74	1620	1.95	
261	2410	6.79	1560	2.1	
296	2120	5.99	1510	2.2	
334	1880	5.31	1460	2.4	
140	4510	12.70	1250	1.00	JRTR69DN132M4 JRTRF69DN132M4
154	4090	11.54	1350	1.10	
177	3550	10.00	1320	1.15	
204	3080	8.70	1280	1.25	
228	2760	7.79	1260	1.20	
241	2610	7.36	1240	1.25	

Output speed n_a [r/min]	Output torque T_a lbf · in	Ratio i	Permitted overhung load F_{Ra} [1] lbf	Service factor f_B	Model
10.0HP					
283	2220	6.27	1200	1.30	JRTR69DN132M4 JRTRF69DN132M4
311	2020	5.70	1170	1.35	
360	1750	4.93	1130	1.45	
413	1520	4.29	1090	1.55	
223	2830	7.97	460	1.10	JRTR59DN132M4 JRTRF59DN132M4
236	2670	7.53	510	1.15	
277	2270	6.41	625	1.30	
305	2060	5.82	615	1.35	
352	1790	5.05	605	1.50	
404	1550	4.39	590	1.60	
240	2620	14.77	625	1.45	JRTR59DN132M2 JRTRF59DN132M2
254	2470	13.95	625	1.55	
298	2110	11.88	610	1.70	
328	1910	10.79	605	1.80	
379	1660	9.35	590	1.95	
445	1410	7.97	580	2.2	
471	1330	7.53	575	2.3	
553	1130	6.41	555	2.6	
609	1030	5.82	545	2.7	
703	890	5.05	525	3.0	
807	780	4.39	510	3.2	
268	2350	6.63	2150	1.75	JRTRX109DN132M4 JRTRXF109DN132M4
316	1990	5.61	2060	2.0	
342	1840	5.19	2010	3.3	
381	1650	4.65	1950	3.7	
422	1490	4.20	1900	4.9	
306	2050	5.79	1720	1.80	JRTRX99DN132M4 JRTRXF99DN132M4
361	1740	4.91	1650	2.0	
392	1600	4.52	1610	3.3	
439	1430	4.04	1560	3.7	
487	1290	3.64	1520	4.1	
538	1170	3.30	1480	4.5	
607	1030	2.92	1430	5.1	
394	1590	4.50	1230	1.60	JRTRX89DN132M4 JRTRXF89DN132M4
469	1340	3.78	1180	2.0	
510	1230	3.48	1160	2.9	
575	1090	3.09	1120	3.3	
643	980	2.76	1090	3.7	
715	880	2.48	1060	4.1	
824	760	2.15	1020	4.5	
920	680	1.93	980	4.6	
1110	565	1.60	930	4.9	
1275	490	1.39	900	5.2	
546	1150	3.25	860	1.40	JRTRX79DN132M4 JRTRXF79DN132M4
576	1090	3.08	850	1.55	
658	950	2.70	820	2.0	
730	860	2.43	800	2.2	
833	755	2.13	775	2.3	
944	665	1.88	750	2.5	
1065	590	1.67	725	2.6	
1245	505	1.42	695	2.7	
698	900	2.54	490	1.15	JRTRX69DN132M4 JRTRXF69DN132M4
739	850	2.40	505	1.30	
868	725	2.04	490	1.65	

Output speed n_a [r/min]	Output torque T_a lbf · in	Ratio i	Permitted overhung load F_{Ra} [1] lbf	Service factor f_B	Model
10.0HP					
955	655	1.86	480	1.70	JRTRX69DN132M4
1105	570	1.61	465	1.75	JRTRXF69DN132M4
1265	495	1.40	450	1.85	
1075	585	1.65	52	1.05	JRTRX59DN132M4
1200	520	1.48	78	1.15	JRTRXF59DN132M4
1360	460	1.30	120	1.20	
12.3HP					
5.1	136900	349	27000	1.15	
6.0	114600	295	27000	1.40	
6.6	107600	270	27000	1.50	JRTR169R109DN132L4
7.7	90600	229	27000	1.75	JRTRF169R109DN132L4
8.9	78700	200	27000	2.0	
10	65900	169	27000	2.4	
4.9	147700	361	27000	1.10	
5.4	133900	328	27000	1.20	
6.1	118400	291	27000	1.35	
6.7	107200	264	27000	1.50	JRTR169R109DN132L4
7.8	91700	227	27000	1.75	JRTRF169R109DN132L4
9.0	79600	198	27000	2.0	
11	67100	168	27000	2.4	
4.7	152000	376	27000	1.05	
5.3	135200	335	27000	1.20	JRTR169R99DN132L4
5.9	121300	303	27000	1.30	JRTRF169R99DN132L4
6.4	111700	279	27000	1.40	
6.3	113500	280	14200	1.00	
7.2	100100	247	14800	1.15	
8.3	86500	214	15300	1.35	JRTR149R89DN132L4
9.4	76500	189	15600	1.50	JRTRF149R89DN132L4
11	64300	159	16000	1.80	
7.7	100200	229.71	27000	1.60	
9.5	81600	186.93	27000	1.95	
12	66800	153.07	27000	2.4	JRTR169DN132L4
13	61100	139.98	27000	2.6	JRTRF169DN132L4
15	53100	121.81	27000	3.0	
11	71300	163.31	15800	1.60	
12	64100	146.91	16000	1.80	
15	52300	119.86	16200	2.2	
16	47700	109.31	16300	2.4	JRTR149DN132L4
19	41300	94.60	16400	2.8	JRTRF149DN132L4
21	36400	83.47	16500	3.2	
25	31400	72.09	16600	3.6	
26	29200	66.99	16600	3.9	
11	68200	156.31	12100	1.05	
13	61600	141.12	12500	1.15	
14	55900	128.18	12700	1.25	
16	49600	113.72	12900	1.45	
17	45000	103.20	13100	1.55	
20	38700	88.70	13300	1.85	JRTR139DN132L4
22	35300	80.91	13400	2.0	JRTRF139DN132L4
24	32000	73.49	13400	2.2	
27	28400	65.20	13500	2.5	
30	25800	59.17	13600	2.7	
35	22200	50.86	13600	3.2	
40	19300	44.39	13700	3.6	

Output speed n_a [r/min]	Output torque T_a lbf · in	Ratio i	Permitted overhung load F_{Ra} [1] lbf	Service factor f_B	Model
12.3HP					
23	34300	78.57	6570	1.10	
24	31800	72.88	6470	1.20	
27	28600	65.60	6340	1.35	
30	25900	59.41	6210	1.45	JRTR109DN132L4
34	23000	52.68	6040	1.65	JRTRF109DN132L4
37	20700	47.63	5900	1.85	
44	17600	40.37	5680	2.2	
50	15300	35.26	5490	2.5	
60	12800	29.49	5240	3.0	
58	13400	30.77	5300	2.8	
64	12000	27.58	5140	3.2	JRTR109DN132L4
71	10800	24.90	5000	3.5	JRTRF109DN132L4
78	9870	22.62	4870	3.9	
88	8760	20.07	4710	4.3	
30	26100	59.92	4660	1.00	
33	23200	53.21	4580	1.15	
37	20700	47.58	4490	1.30	JRTR99DN132L4
41	18600	42.78	4400	1.40	JRTRF99DN132L4
48	16200	37.13	4280	1.65	
53	14500	33.25	4180	1.75	
64	12000	27.58	4010	1.95	
71	10900	25.03	3920	2.3	
79	9760	22.37	3820	2.5	
88	8790	20.14	3720	2.6	JRTR99DN132L4
97	7960	18.24	3630	2.8	JRTRF99DN132L4
110	7060	16.17	3510	3.0	
121	6380	14.62	3420	3.2	
143	5410	12.39	3270	3.6	
64	12100	27.88	3140	1.10	
83	9390	21.51	2990	1.40	
93	8330	19.10	2920	1.55	
104	7450	17.08	2850	1.65	
116	6700	15.35	2780	1.75	JRTR89DN132L4
133	5810	13.33	2690	1.95	JRTRF89DN132L4
149	5200	11.93	2610	2.1	
179	4320	9.90	2490	2.4	
194	3990	9.14	2480	2.7	
216	3580	8.22	2410	2.9	
249	3110	7.13	2310	3.0	
278	2780	6.39	2240	3.2	
126	6130	14.05	1370	1.05	
144	5380	12.33	1500	1.15	
163	4740	10.88	1600	1.25	
184	4210	9.64	1620	1.30	JRTR79DN132L4
229	3370	7.74	1560	1.60	JRTRF79DN132L4
261	2960	6.79	1520	1.75	
296	2610	5.99	1480	1.85	
334	2310	5.31	1430	1.95	
342	2260	5.19	1970	2.7	
382	2030	4.65	1920	3.0	JRTRX109DN132L4
423	1830	4.20	1860	4.0	JRTRXF109DN132L4
465	1660	3.81	1810	4.4	
524	1470	3.38	1750	5.0	



Output speed n_a [r/min]	Output torque T_a lbf · in	Ratio i	Permitted overhung load F_{Ra} [1] lbf	Service factor f_B	Model
12.3HP					
392	1970	4.52	1570	2.7	
439	1760	4.04	1530	3.0	
488	1580	3.64	1490	3.3	
538	1430	3.30	1450	3.7	
607	1270	2.92	1400	4.1	JRTRX99DN132L4
672	1150	2.64	1360	4.6	JRTRXF99DN132L4
792	970	2.24	1300	5.4	
907	850	1.96	1250	5.9	
1085	710	1.64	1180	6.2	
1255	615	1.42	1130	6.5	
511	1510	3.48	1120	2.4	
575	1340	3.09	1090	2.7	
643	1200	2.76	1060	3.0	
715	1080	2.48	1030	3.3	JRTRX89DN132L4
824	940	2.15	990	3.6	JRTRXF89DN132L4
920	840	1.93	960	3.7	
1110	695	1.60	910	4.0	
1275	605	1.39	880	4.2	
731	1060	2.43	770	1.80	
833	930	2.13	750	1.90	
944	820	1.88	725	2.0	JRTRX79DN132L4
1065	725	1.67	705	2.1	JRTRXF79DN132L4
1245	620	1.42	675	2.2	
15.0HP					
6.0	141100	295	27000	1.15	
6.6	131900	270	27000	1.20	JRTR169R109DN160M4
7.8	111300	229	27000	1.45	JRTRF169R109DN160M4
8.9	96700	200	27000	1.65	
10	81100	169	27000	1.95	
6.1	144900	291	27000	1.10	
6.7	131200	264	27000	1.20	
7.8	112300	227	27000	1.40	JRTR169R109DN160M4
9.0	97600	198	27000	1.65	JRTRF169R109DN160M4
11	82400	168	27000	1.95	
5.9	148500	303	27000	1.05	JRTR169R99DN160M4
6.4	136800	279	27000	1.15	JRTRF169R99DN160M4
8.3	105700	214	14500	1.10	
9.4	93400	189	15000	1.25	JRTR149R89DN160M4
11	78500	159	15600	1.45	JRTRF149R89DN160M4
7.7	122200	229.71	27000	1.30	
9.5	99400	186.93	27000	1.60	
12	81400	153.07	27000	1.95	
13	74400	139.98	27000	2.1	JRTR169DN160M4
15	64800	121.81	27000	2.5	JRTRF169DN160M4
17	57200	107.49	27000	2.8	
19	49500	93.19	27000	3.2	
21	44100	82.91	27000	3.6	

Output speed n_a [r/min]	Output torque T_a lbf · in	Ratio i	Permitted overhung load F_{Ra} [1] lbf	Service factor f_B	Model
15.0HP					
39	24400	46.00	27000	2.5	JRTR169DN160M4 JRTRF169DN160M4
11	86900	163.31	15300	1.30	
12	78100	146.91	15600	1.45	JRTR149DN160M4 JRTRF149DN160M4
15	63700	119.86	16000	1.80	
16	58100	109.31	16100	2.0	
19	50300	94.60	16300	2.3	
21	44400	83.47	16400	2.6	
25	38300	72.09	16500	3.0	JRTR149DN160M4 JRTRF149DN160M4
27	35600	66.99	16500	3.2	
29	32500	61.09	16600	3.5	
34	28100	52.87	16600	4.1	
14	68200	128.18	12100	1.05	
16	60500	113.72	12500	1.15	
17	54900	103.20	12700	1.30	
20	47200	88.70	13000	1.50	
22	43000	80.91	13200	1.65	
24	39100	73.49	13300	1.80	JRTR139DN160M4 JRTRF139DN160M4
27	34600	65.20	13400	2.0	
30	31400	59.17	13500	2.2	
35	27000	50.86	13500	2.6	
40	23600	44.39	13600	3.0	
47	20000	37.65	13700	3.5	
54	17500	32.91	13700	4.0	
24	38700	72.88	6180	1.00	
27	34900	65.60	6070	1.10	
30	31600	59.41	5970	1.20	
34	28000	52.68	5830	1.35	JRTR109DN160M4
37	25300	47.63	5710	1.50	JRTRF109DN160M4
44	21400	40.37	5510	1.75	
50	18700	35.26	5340	2.0	
60	15600	29.49	5120	2.4	
58	16300	30.77	5170	2.3	
64	14600	27.58	5030	2.6	
71	13200	24.90	4900	2.9	JRTR109DN160M4
79	12000	22.62	4780	3.2	JRTRF109DN160M4
89	10600	20.07	4630	3.6	
98	9680	18.21	4510	3.9	
37	25300	47.58	4260	1.05	
42	22700	42.78	4190	1.15	
48	19700	37.13	4100	1.35	JRTR99DN160M4 JRTRF99DN160M4
53	17600	33.25	4020	1.45	
64	14600	27.58	3880	1.60	

Output speed n_a [r/min]	Output torque T_a lbf · in	Ratio i	Permitted overhung load F_{Ra} [1] lbf	Service factor f_B	Model
15.0HP					
71	13300	25.03	3800	1.90	
79	11900	22.37	3710	2.0	
88	10700	20.14	3620	2.1	
97	9700	18.24	3540	2.3	
110	8600	16.17	3430	2.5	JRTR99DN160M4
121	7780	14.62	3350	2.6	JRTRF99DN160M4
143	6590	12.39	3210	2.9	
164	5760	10.83	3090	3.2	
191	4940	9.29	3010	3.6	
212	4460	8.39	2930	4.0	
250	3780	7.12	2790	4.7	
286	3300	6.21	2680	5.1	
83	11400	21.51	2870	1.15	
93	10100	19.10	2810	1.25	
104	9080	17.08	2750	1.35	
116	8170	15.35	2690	1.45	
133	7090	13.33	2610	1.60	
149	6350	11.93	2540	1.70	JRTR89DN160M4
179	5260	9.90	2430	2.0	JRTRF89DN160M4
194	4860	9.14	2440	2.2	
216	4370	8.22	2370	2.4	
249	3790	7.13	2280	2.5	
278	3390	6.39	2210	2.6	
335	2820	5.30	2100	2.9	
163	5780	10.88	1190	1.00	
184	5130	9.64	1310	1.10	
229	4110	7.74	1220	1.30	JRTR79DN160M4
262	3610	6.79	1320	1.40	JRTRF79DN160M4
296	3180	5.99	1390	1.50	
334	2820	5.31	1400	1.60	
342	2760	5.19	1920	2.2	
382	2470	4.65	1870	2.5	
423	2230	4.20	1820	3.3	JRTR109DN160M4
466	2020	3.81	1780	3.6	JRTRF109DN160M4
525	1800	3.38	1720	4.1	
578	1630	3.07	1680	4.5	
673	1400	2.64	1610	5.2	
393	2400	4.52	1530	2.2	
439	2150	4.04	1490	2.5	
488	1930	3.64	1450	2.7	
539	1750	3.30	1410	3.0	
608	1550	2.92	1370	3.4	JRTRX99DN160M4
672	1400	2.64	1330	3.7	JRTRXF99DN160M4
793	1190	2.24	1270	4.4	
908	1040	1.96	1230	4.8	
1085	870	1.64	1170	5.1	
1255	750	1.42	1120	5.3	
511	1840	3.48	1080	1.95	
575	1640	3.09	1050	2.2	
643	1460	2.76	1030	2.4	
716	1320	2.48	1000	2.7	JRTRX89DN160M4
825	1140	2.15	970	3.0	JRTRXF89DN160M4
921	1020	1.93	940	3.1	
1110	850	1.60	890	3.3	
1275	740	1.39	860	3.5	

Output speed n_a [r/min]	Output torque T_a lbf · in	Ratio i	Permitted overhung load F_{Ra} [1] lbf	Service factor f_B	Model
15.0HP					
731	1290	2.43	560	1.45	
834	1130	2.13	600	1.55	JRTRX79DN160M4
945	1000	1.88	625	1.65	JRTRXF79DN160M4
1065	880	1.67	645	1.75	
1250	755	1.42	655	1.80	
20HP					
7.8	149500	229	27000	1.05	JRTR169R109DN160L4
8.9	130100	200	27000	1.20	JRTRF169R109DN160L4
10	109300	169	27000	1.45	
7.8	150500	227	27000	1.05	JRTR169R109DN160L4
9.0	131000	198	27000	1.20	JRTRF169R109DN160L4
11	110700	168	27000	1.45	
11	105000	159	14600	1.10	JRTR149R89DN160L4 JRTRF149R89DN160L4
7.7	162800	229.71	27000	1.00	
9.5	132500	186.93	27000	1.20	
12	108500	153.07	27000	1.45	
13	99200	139.98	27000	1.60	
15	86300	121.81	27000	1.85	JRTR169DN160L4
17	76200	107.49	27000	2.1	JRTRF169DN160L4
19	66000	93.19	27000	2.4	
21	58700	82.91	27000	2.7	
24	52200	73.70	27000	3.0	
26	47700	67.40	27000	3.3	
39	32600	46.00	27000	1.90	JRTR169DN160L4
47	26700	37.74	27000	3.0	JRTRF169DN160L4
11	115800	163.31	14000	1.00	
12	104100	146.91	14600	1.10	
15	84900	119.86	15400	1.35	
16	77500	109.31	15600	1.50	
19	67000	94.60	15900	1.70	JRTR149DN160L4
21	59100	83.47	16100	1.95	JRTRF149DN160L4
25	51100	72.09	16300	2.2	
27	47500	66.99	16300	2.4	
29	43300	61.09	16400	2.7	
34	37400	52.87	16500	3.1	
38	33000	46.65	16600	3.5	
20	62900	88.70	12400	1.15	
22	57300	80.91	12600	1.25	
24	52100	73.49	12900	1.35	
27	46200	65.20	13100	1.55	
30	41900	59.17	13200	1.70	JRTR139DN160L4
35	36000	50.86	13400	1.95	JRTRF139DN160L4
40	31400	44.39	13500	2.2	
47	26700	37.65	13600	2.6	
54	23300	32.91	13600	3.0	
64	19700	27.83	13700	3.4	
34	37300	52.68	5440	1.00	
37	33700	47.63	5360	1.15	
44	28600	40.37	5210	1.35	JRTR109DN160L4
50	25000	35.26	5080	1.50	JRTRF109DN160L4
60	20900	29.49	4900	1.80	



Output speed n_a [r/min]	Output torque T_a lbf · in	Ratio i	Permitted overhung load F_{Ra} [1] lbf	Service factor f_B	Model
20HP					
58	21800	30.77	4940	1.75	
64	19500	27.58	4830	1.95	
71	17600	24.90	4720	2.1	
79	16000	22.62	4610	2.4	JRTR109DN160L4
89	14200	20.07	4480	2.7	JRTR109DN160L4
98	12900	18.21	4380	3.0	
114	11000	15.65	4210	3.4	
130	9680	13.66	4060	3.9	
48	26300	37.13	3760	1.00	
53	23500	33.25	3720	1.10	JRTR99DN160L4
64	19500	27.58	3630	1.20	JRTR99DN160L4
71	17700	25.03	3570	1.40	
79	15800	22.37	3500	1.50	
88	14200	20.14	3440	1.60	
97	12900	18.24	3370	1.70	
110	11400	16.17	3290	1.85	
122	10300	14.62	3220	1.95	JRTR99DN160L4
143	8780	12.39	3100	2.2	JRTR99DN160L4
164	7670	10.83	3000	2.4	
191	6580	9.29	2940	2.7	
212	5950	8.39	2860	3.0	
250	5040	7.12	2730	3.5	
286	4400	6.21	2630	3.8	
104	12100	17.08	2560	1.00	
116	10800	15.35	2520	1.10	
133	9450	13.33	2460	1.20	
149	8460	11.93	2410	1.30	
179	7020	9.90	2320	1.50	JRTR89DN160L4
194	6480	9.14	2360	1.65	JRTR89DN160L4
216	5820	8.22	2300	1.75	
249	5050	7.13	2220	1.85	
278	4530	6.39	2150	2.0	
335	3750	5.30	2050	2.1	
342	3680	5.19	1830	1.65	
382	3290	4.65	1790	1.85	
423	2970	4.20	1750	2.5	
466	2700	3.81	1710	2.7	
525	2400	3.38	1660	3.1	JRTRX109DN160L4
579	2170	3.07	1620	3.4	JRTRXF109DN160L4
673	1870	2.64	1560	3.9	
771	1630	2.30	1500	4.5	
909	1380	1.95	1430	4.9	
1040	1210	1.71	1380	5.2	
1230	1020	1.44	1320	5.6	
393	3200	4.52	1450	1.65	
439	2860	4.04	1420	1.85	
488	2580	3.64	1380	2.0	
539	2330	3.30	1350	2.2	
608	2070	2.92	1320	2.5	JRTRX99DN160L4
672	1870	2.64	1280	2.8	JRTRXF99DN160L4
793	1580	2.24	1230	3.3	
908	1380	1.96	1190	3.6	
1085	1160	1.64	1130	3.9	
1255	1000	1.42	1090	4.0	

Output speed n_a [r/min]	Output torque T_a lbf · in	Ratio i	Permitted overhung load F_{Ra} [1] lbf	Service factor f_B	Model
20HP					
511	2460	3.48	1010	1.45	
576	2180	3.09	990	1.65	
644	1950	2.76	970	1.85	
716	1750	2.48	950	2.0	JRTRX89DN160L4
825	1520	2.15	920	2.2	JRTRXF89DN160L4
921	1360	1.93	900	2.3	
1110	1130	1.60	860	2.5	
1275	980	1.39	830	2.6	
25HP					
11	137300	169	27000	1.15	JRTR169R109DN180M4 JRTRF169R109DN180M4
11	138700	168	27000	1.15	JRTR169R109DN180M4 JRTRF169R109DN180M4
12	135300	153.07	27000	1.20	
13	123800	139.98	27000	1.30	
15	107700	121.81	27000	1.50	
17	95000	107.49	27000	1.70	
19	82400	93.19	27000	1.95	JRTR169DN180M4
21	73300	82.91	27000	2.2	JRTRF169DN180M4
24	65100	73.70	27000	2.4	
26	59600	67.40	27000	2.7	
30	51800	58.65	27000	3.1	
47	33300	37.74	27000	2.4	JRTR169DN180M4 JRTRF169DN180M4
15	106000	119.86	14500	1.10	
16	96600	109.31	14900	1.20	
19	83600	94.60	15400	1.35	
21	73800	83.47	15700	1.55	
25	63700	72.09	16000	1.80	JRTR149DN180M4
27	59200	66.99	16100	1.95	JRTRF149DN180M4
29	54000	61.09	16200	2.1	
34	46700	52.87	16300	2.5	
38	41200	46.65	16400	2.8	
44	35600	40.29	16500	3.2	
22	71500	80.91	12000	1.00	
24	64900	73.49	12300	1.10	
27	57600	65.20	12600	1.25	
30	52300	59.17	12800	1.35	JRTR139DN180M4
35	44900	50.86	13100	1.55	JRTRF139DN180M4
40	39200	44.39	13300	1.80	
47	33300	37.65	13400	2.1	
54	29100	32.91	13500	2.4	
64	24600	27.83	13600	2.8	
60	26100	29.57	13600	2.6	
74	21300	24.12	13600	3.3	JRTR139DN180M4
81	19400	22.00	13700	3.6	JRTRF139DN180M4
94	16800	19.04	13700	4.2	
106	14800	16.80	13700	4.8	
44	35700	40.37	4910	1.05	JRTR109DN180M4
51	31100	35.26	4810	1.20	JRTRF109DN180M4
60	26000	29.49	4670	1.45	

Output speed n_a [r/min]	Output torque T_a lbf · in	Ratio i	Permitted overhung load F_{Ra} [1] lbf	Service factor f_B	Model
25HP					
72	22000	24.90	4530	1.75	
79	20000	22.62	4440	1.90	
89	17700	20.07	4330	2.1	
98	16100	18.21	4240	2.4	
114	13800	15.65	4090	2.8	JRTR109DN180M4
130	12000	13.66	3960	3.1	JRTRF109DN180M4
154	10200	11.59	3800	3.7	
176	8950	10.13	3670	4.2	
227	6940	7.86	3470	3.8	
267	5890	6.66	3310	4.5	
88	17800	20.14	3250	1.30	
98	16100	18.24	3200	1.35	
110	14300	16.17	3140	1.50	
122	12900	14.62	3080	1.55	
144	10900	12.39	2980	1.75	
165	9570	10.83	2900	1.95	JRTR99DN180M4
192	8210	9.29	2870	2.2	JRTRF99DN180M4
212	7420	8.39	2800	2.4	
250	6290	7.12	2680	2.8	
287	5490	6.21	2580	3.0	
343	4590	5.20	2460	3.4	
396	3970	4.50	2360	3.6	
149	10500	11.93	2280	1.05	
180	8750	9.90	2210	1.20	
195	8080	9.14	2270	1.30	JRTR89DN180M4
217	7260	8.22	2220	1.40	JRTRF89DN180M4
250	6300	7.13	2150	1.50	
279	5640	6.39	2090	1.60	
336	4680	5.30	2000	1.70	
424	3710	4.20	1670	2.0	
467	3370	3.81	1640	2.2	
526	2990	3.38	1600	2.5	
580	2710	3.07	1560	2.7	JRTRX109DN180M4
675	2330	2.64	1510	3.1	JRTRXF109DN180M4
773	2030	2.30	1460	3.6	
911	1720	1.95	1400	3.9	
1045	1510	1.71	1350	4.1	
1235	1270	1.44	1290	4.5	
489	3210	3.64	1320	1.65	
540	2910	3.30	1290	1.80	
609	2580	2.92	1260	2.0	JRTRX99DN180M4
674	2330	2.64	1240	2.2	JRTRXF99DN180M4
795	1980	2.24	1190	2.7	
910	1730	1.96	1150	2.9	
1090	1440	1.64	1100	3.1	
1255	1250	1.42	1060	3.2	
645	2440	2.76	870	1.45	
718	2190	2.48	890	1.65	JRTRX89DN180M4
827	1900	2.15	870	1.80	JRTRXF89DN180M4
923	1700	1.93	850	1.85	
1115	1410	1.60	820	1.95	
1280	1230	1.39	795	2.1	

Output speed n_a [r/min]	Output torque T_a lbf · in	Ratio i	Permitted overhung load F_{Ra} [1] lbf	Service factor f_B	Model
30HP					
12	162400	153.07	27000	1.00	
13	148500	139.98	27000	1.05	
15	129200	121.81	27000	1.25	
17	114000	107.49	27000	1.40	
19	98900	93.19	27000	1.60	JRTR169DN180L4
21	87900	82.91	27000	1.80	JRTRF169DN180L4
24	78200	73.70	27000	2.0	
26	71500	67.40	27000	2.2	
30	62200	58.65	27000	2.6	
34	54900	51.76	27000	2.9	
40	47600	44.87	27000	3.3	
47	40000	37.74	27000	2.0	JRTR169DN180L4
58	32500	30.71	27000	2.7	JRTRF169DN180L4
16	116000	109.31	14000	1.00	
19	100300	94.60	14800	1.15	
21	88500	83.47	15200	1.30	
25	76500	72.09	15600	1.50	
27	71000	66.99	15800	1.60	JRTR149DN180L4
29	64800	61.09	16000	1.75	JRTRF149DN180L4
34	56100	52.87	16200	2.0	
38	49500	46.65	16300	2.3	
44	42700	40.29	16400	2.7	
50	37800	35.64	16500	3.0	
59	31700	29.95	16600	3.6	
27	69100	65.20	12100	1.00	
30	62700	59.17	12400	1.15	
35	53900	50.86	12800	1.30	JRTR139DN180L4
40	47100	44.39	13000	1.50	JRTRF139DN180L4
47	39900	37.65	13300	1.75	
54	34900	32.91	13400	2.0	
64	29500	27.83	13500	2.3	
60	31300	29.57	13500	2.2	
74	25600	24.12	13600	2.8	
81	23300	22.00	13600	3.0	JRTR139DN180L4
94	20200	19.04	13700	3.5	JRTRF139DN180L4
106	17800	16.80	13700	4.0	
123	15300	14.51	13600	4.6	
139	13600	12.83	13200	5.2	
51	37400	35.26	4550	1.00	JRTR109DN180L4
60	31200	29.49	4450	1.20	JRTRF109DN180L4
72	26400	24.90	4340	1.45	
79	24000	22.62	4270	1.60	
89	21200	20.07	4180	1.80	
98	19300	18.21	4100	1.95	
114	16600	15.65	3970	2.3	
130	14400	13.66	3860	2.6	JRTR109DN180L4
154	12200	11.59	3710	3.1	JRTRF109DN180L4
176	10700	10.13	3590	3.5	
208	9080	8.56	3440	4.2	
227	8330	7.86	3420	3.1	
267	7070	6.66	3270	3.7	
306	6180	5.82	3140	4.2	



Output speed n_a [r/min]	Output torque T_a lbf · in	Ratio i	Permitted overhung load F_{Ra} [1] lbf	Service factor f_B	Model
30HP					
88	21300	20.14	3070	1.10	JRTR99DN180L4 JRTRF99DN180L4
98	19300	18.24	3040	1.15	
110	17100	16.17	2990	1.25	
122	15500	14.62	2950	1.30	
144	13100	12.39	2870	1.45	
165	11400	10.83	2800	1.60	
192	9850	9.29	2800	1.80	
212	8900	8.39	2740	2.0	
250	7550	7.12	2630	2.3	
287	6590	6.21	2540	2.5	
343	5510	5.20	2420	2.9	
396	4770	4.50	2330	3.0	
180	10500	9.90	2110	1.00	JRTR89DN180L4 JRTRF89DN180L4
195	9700	9.14	2190	1.10	
217	8720	8.22	2150	1.20	
250	7570	7.13	2090	1.25	
279	6770	6.39	2040	1.35	
336	5620	5.30	1950	1.45	
424	4450	4.20	1600	1.65	JRTRX109DN180L4 JRTRXF109DN180L4
467	4040	3.81	1570	1.80	
526	3590	3.38	1540	2.0	
580	3250	3.07	1510	2.2	
675	2800	2.64	1460	2.6	
773	2440	2.30	1410	3.0	
911	2070	1.95	1360	3.3	
1045	1810	1.71	1310	3.4	
1235	1530	1.44	1260	3.7	
489	3860	3.64	1250	1.35	JRTRX99DN180L4 JRTRXF99DN180L4
540	3490	3.30	1230	1.50	
609	3100	2.92	1210	1.70	
674	2800	2.64	1190	1.90	
795	2370	2.24	1150	2.2	
910	2070	1.96	1110	2.4	
1090	1730	1.64	1070	2.6	
1255	1500	1.42	1030	2.7	
645	2920	2.76	520	1.20	JRTRX89DN180L4 JRTRXF89DN180L4
718	2630	2.48	590	1.35	
827	2280	2.15	665	1.50	
923	2040	1.93	710	1.55	
1115	1690	1.60	750	1.65	
1280	1470	1.39	760	1.75	
40HP					
17	151900	107.49	27000	1.05	JRTR169DN200L4 JRTRF169DN200L4
19	131700	93.19	27000	1.20	
22	117100	82.91	27000	1.35	
24	104100	73.70	27000	1.55	
26	95200	67.40	27000	1.65	
30	82800	58.65	27000	1.90	
34	73100	51.76	27000	2.2	
40	63400	44.87	27000	2.5	
45	56400	39.92	27000	2.8	
52	48600	34.41	27000	3.3	
64	39500	27.96	27000	4.0	
75	33500	23.71	27000	4.8	

Output speed n_a [r/min]	Output torque T_a lbf · in	Ratio i	Permitted overhung load F_{Ra} [1] lbf	Service factor f_B	Model
40HP					
58	43400	30.71	27000	2.0	JRTR169DN200L4 JRTRF169DN200L4
25	101800	72.09	14700	1.15	JRTR149DN200L4 JRTRF149DN200L4
27	94600	66.99	15000	1.20	
29	86300	61.09	15300	1.35	
34	74700	52.87	15700	1.55	
38	65900	46.65	15900	1.75	
44	56900	40.29	16100	2.0	
50	50300	35.64	16300	2.3	
60	42300	29.95	16400	2.7	
74	34100	24.19	16500	3.1	
87	28800	20.44	16600	3.7	JRTR149DN200L4 JRTRF149DN200L4
99	25400	18.04	16600	3.6	
114	22100	15.64	16700	5.2	
35	71800	50.86	11900	1.00	JRTR139DN200L4 JRTRF139DN200L4
40	62700	44.39	12400	1.15	
47	53200	37.65	12800	1.35	
54	46500	32.91	13100	1.50	
64	39300	27.83	13300	1.75	
74	34000	24.12	13400	2.1	JRTR139DN200L4 JRTRF139DN200L4
81	31000	22.00	13500	2.3	
94	26900	19.04	13500	2.6	
106	23700	16.80	13300	3.0	
123	20500	14.51	13000	3.5	
139	18100	12.83	12700	3.9	
165	15200	10.79	12300	4.6	
235	10700	7.59	11500	4.2	
279	9010	6.38	11000	5.0	
89	28300	20.07	3880	1.35	JRTR109DN200L4 JRTRF109DN200L4
98	25700	18.21	3830	1.50	
114	22100	15.65	3740	1.70	
131	19300	13.66	3650	1.95	
154	16300	11.59	3540	2.3	
176	14300	10.13	3440	2.7	
208	12100	8.56	3310	3.1	
227	11100	7.86	3320	2.4	
268	9410	6.66	3180	2.8	
306	8230	5.82	3070	3.2	
362	6960	4.92	2930	3.7	
122	20600	14.62	2680	1.00	JRTR99DN200L4 JRTRF99DN200L4
144	17500	12.39	2640	1.10	
165	15300	10.83	2600	1.20	
192	13100	9.29	2670	1.35	
212	11800	8.39	2610	1.50	
251	10000	7.12	2520	1.75	
287	8780	6.21	2450	1.90	
343	7340	5.20	2340	2.1	
396	6360	4.50	2260	2.3	
527	4780	3.38	1410	1.55	JRTRX109DN200L4 JRTRXF109DN200L4
581	4340	3.07	1390	1.70	
675	3730	2.64	1360	1.95	
774	3250	2.30	1330	2.2	
912	2760	1.95	1280	2.5	
1045	2410	1.71	1240	2.6	
1235	2040	1.44	1200	2.8	

Output speed n_a [r/min]	Output torque T_a lbf · in	Ratio i	Permitted overhung load F_{Ra} [1] lbf	Service factor f_B	Model
40HP					
610	4130	2.92	990	1.25	
675	3730	2.64	1060	1.40	
796	3160	2.24	1060	1.65	JRTRX99DN200L4
911	2760	1.96	1040	1.80	JRTRXF99DN200L4
1090	2310	1.64	1000	1.95	
1260	2000	1.42	970	2.0	
50HP					
22	146300	82.91	27000	1.10	
24	130000	73.70	27000	1.20	
26	118900	67.40	27000	1.35	
30	103500	58.65	27000	1.55	
34	91300	51.76	27000	1.75	JRTR169DN225S4
40	79100	44.87	27000	2.0	JRTRF169DN225S4
45	70400	39.92	27000	2.3	
52	60700	34.41	27000	2.6	
64	49300	27.96	27000	3.2	
58	54100	30.71	27000	1.65	
73	43300	24.57	27000	2.9	
82	38500	21.85	27000	3.0	JRTR169DN225S4
94	33500	19.03	27000	4.2	JRTRF169DN225S4
105	29900	16.98	27000	4.4	
29	107800	61.09	14400	1.05	
34	93300	52.87	15000	1.25	
38	82300	46.65	15400	1.40	
44	71100	40.29	15800	1.60	JRTR149DN225S4
50	62800	35.64	16000	1.85	JRTRF149DN225S4
60	52800	29.95	16200	2.2	
74	42600	24.19	16400	2.5	
87	36000	20.44	16500	2.9	
99	31800	18.04	16600	2.9	JRTR149DN225S4
114	27500	15.64	16600	4.2	JRTRF149DN225S4
128	24500	13.91	16600	4.5	
47	66400	37.65	12200	1.05	JRTR139DN225S4
54	58000	32.91	12600	1.20	JRTRF139DN225S4
64	49100	27.83	13000	1.40	
74	42500	24.12	13000	1.65	
81	38800	22.00	12900	1.80	
94	33600	19.04	12800	2.1	
106	29600	16.80	12600	2.4	
123	25600	14.51	12400	2.8	
139	22600	12.83	12200	3.1	JRTR139DN225S4
166	19000	10.79	11800	3.7	JRTRF139DN225S4
205	15300	8.71	11400	4.5	
235	13300	7.59	11200	3.4	
280	11200	6.38	10800	4.0	
346	9090	5.15	10300	4.5	

Output speed n_a [r/min]	Output torque T_a lbf · in	Ratio i	Permitted overhung load F_{Ra} [1] lbf	Service factor f_B	Model
50HP					
89	35400	20.07	3580	1.05	
98	32100	18.21	3560	1.20	
114	27600	15.65	3510	1.40	
131	24100	13.66	3450	1.60	
154	20400	11.59	3360	1.85	
176	17800	10.13	3290	2.1	JRTR109DN225S4
208	15100	8.56	3180	2.5	JRTRF109DN225S4
227	13800	7.86	3220	1.90	
268	11700	6.66	3100	2.2	
306	10200	5.82	2990	2.6	
362	8690	4.92	2870	3.0	
192	16300	9.29	2530	1.10	
213	14800	8.39	2490	1.20	
251	12500	7.12	2420	1.40	JRTR99DN225S4
287	10900	6.21	2350	1.50	JRTRF99DN225S4
343	9170	5.20	2270	1.70	
397	7940	4.50	2190	1.80	
527	5970	3.38	1290	1.25	
581	5420	3.07	1280	1.35	
676	4650	2.64	1260	1.60	JRTRX109DN225S4
775	4060	2.30	1240	1.80	JRTRXF109DN225S4
913	3440	1.95	1210	1.95	
1045	3010	1.71	1180	2.1	
1235	2540	1.44	1140	2.2	
611	5150	2.92	410	1.00	
675	4660	2.64	520	1.15	
797	3950	2.24	650	1.35	JRTRX99DN225S4
912	3450	1.96	755	1.45	JRTRXF99DN225S4
1090	2880	1.64	830	1.55	
1260	2500	1.42	870	1.60	
60HP					
24	156000	73.70	27000	1.00	
26	142700	67.40	27000	1.10	
30	124200	58.65	27000	1.30	
34	109600	51.76	27000	1.45	JRTR169DN225M4
40	95000	44.87	27000	1.70	JRTRF169DN225M4
45	84500	39.92	27000	1.90	
52	72800	34.41	27000	2.2	
64	59200	27.96	27000	2.7	
75	50200	23.71	27000	3.2	
58	65000	30.71	27000	1.35	
73	52000	24.57	27000	2.4	JRTR169DN225M4
82	46200	21.85	27000	2.5	JRTRF169DN225M4
94	40300	19.03	27000	3.5	
105	35900	16.98	27000	3.7	
34	111900	52.87	14200	1.05	
38	98800	46.65	14800	1.15	
44	85300	40.29	15300	1.35	JRTR149DN225M4
50	75400	35.64	15700	1.50	JRTRF149DN225M4
60	63400	29.95	16000	1.80	
74	51200	24.19	16300	2.1	



Output speed n_a [r/min]	Output torque T_a lbf · in	Ratio i	Permitted overhung load F_{Ra} [1)] lbf	Service factor f_B	Model
60HP					
87	43200	20.44	16400	2.5	
99	38100	18.04	16500	2.4	
114	33100	15.64	16600	3.5	JRTR149DN225M4
128	29400	13.91	16600	3.8	JRTRF149DN225M4
149	25300	11.99	16600	4.5	
246	15300	7.25	16600	5.0	
54	69600	32.91	11600	1.00	JRTR139DN225M4
64	58900	27.83	11900	1.15	JRTRF139DN225M4
74	51000	24.12	12000	1.40	
81	46500	22.00	12000	1.50	
94	40300	19.04	12000	1.75	
106	35500	16.80	11900	2.0	
123	30700	14.51	11800	2.3	JRTR139DN225M4
139	27100	12.83	11700	2.6	JRTRF139DN225M4
166	22800	10.79	11400	3.1	
205	18400	8.71	11000	3.8	
235	16000	7.59	10900	2.8	
280	13500	6.38	10500	3.4	
346	10900	5.15	10100	3.7	
114	33100	15.65	3270	1.15	
131	28900	13.66	3240	1.30	
154	24500	11.59	3190	1.55	
176	21400	10.13	3140	1.75	
208	18100	8.56	3060	2.1	JRTR109DN225M4
227	16600	7.86	3120	1.60	JRTRF109DN225M4
268	14100	6.66	3010	1.85	
306	12300	5.82	2920	2.1	
362	10400	4.92	2810	2.5	
527	7160	3.38	755	1.00	
581	6500	3.07	870	1.15	
676	5590	2.64	1010	1.30	
775	4880	2.30	1110	1.50	JRTRX109DN225M4
913	4130	1.95	1130	1.65	JRTRXF109DN225M4
1045	3610	1.71	1110	1.70	
1235	3050	1.44	1080	1.85	
75HP					
30	155200	58.65	27000	1.05	
34	137000	51.76	27000	1.15	
40	118700	44.87	27000	1.35	JRTR169DN225M4
45	105600	39.92	27000	1.50	JRTRF169DN225M4
52	91000	34.41	27000	1.75	
64	74000	27.96	27000	2.1	
75	62700	23.71	27000	2.5	
73	65000	24.57	27000	1.90	
82	57800	21.85	27000	2.0	
94	50300	19.03	27000	2.8	JRTR169DN250M4
105	44900	16.98	27000	3.0	JRTRF169DN250M4
123	38300	14.48	27000	4.2	
149	31700	11.99	25900	4.7	
44	106600	40.29	14500	1.10	
50	94300	35.64	15000	1.20	JRTR149DN250M4
60	79200	29.95	15500	1.45	JRTRF149DN250M4
74	64000	24.19	16000	1.65	

Output speed n_a [r/min]	Output torque T_a lbf · in	Ratio i	Permitted overhung load F_{Ra} [1)] lbf	Service factor f_B	Model
75HP					
87	54100	20.44	16200	1.95	
99	47700	18.04	16300	1.95	
114	41300	15.64	16400	2.8	
128	36800	13.91	16500	3.0	JRTR149DN250M4
149	31700	11.99	16600	3.6	JRTRF149DN250M4
183	25700	9.74	16600	4.5	
246	19100	7.25	16300	4.0	
303	15500	5.89	15500	4.9	
94	50400	19.04	10900	1.40	
106	44400	16.80	10900	1.60	
123	38400	14.51	10900	1.85	
139	33900	12.83	10900	2.1	
166	28500	10.79	10800	2.5	JRTR139DN250M4
205	23000	8.71	10500	3.0	JRTRF139DN250M4
235	20000	7.59	10500	2.2	
280	16800	6.38	10200	2.7	
346	13600	5.15	9780	3.0	
100HP					
40	158300	44.87	27000	1.00	
45	140900	39.92	27000	1.15	JRTR169DN280S4
52	121400	34.41	27000	1.30	JRTRF169DN280S4
64	98600	27.96	27000	1.60	
75	83600	23.71	27000	1.90	
73	86700	24.57	27000	1.45	
82	77100	21.85	27000	1.50	
94	67100	19.03	27000	2.1	JRTR169DN280S4
105	59900	16.98	27000	2.2	JRTRF169DN280S4
123	51000	14.48	26200	3.1	
149	42300	11.99	25200	3.5	
174	36100	10.24	24300	4.2	
60	105700	29.95	14500	1.10	
74	85300	24.19	15300	1.25	
87	72100	20.44	15800	1.45	
99	63600	18.04	16000	1.45	
114	55100	15.64	16200	2.1	
128	49100	13.91	16300	2.3	JRTR149DN280S4
149	42300	11.99	16400	2.7	JRTRF149DN280S4
183	34300	9.74	16500	3.3	
216	29100	8.26	16400	3.9	
246	25500	7.25	15800	3.0	
303	20700	5.89	15100	3.7	
357	17600	5.00	14600	4.3	
94	67200	19.04	8930	1.05	
106	59200	16.80	9230	1.20	
123	51200	14.51	9460	1.40	
139	45200	12.83	9590	1.55	
166	38000	10.79	9660	1.85	JRTR139DN280S4
205	30700	8.71	9630	2.3	JRTRF139DN280S4
235	26700	7.59	9770	1.70	
280	22500	6.38	9580	2.0	
346	18100	5.15	9300	2.2	

Output speed n_a [r/min]	Output torque T_a lbf · in	Ratio i	Permitted overhung load F_{Ra} [1] lbf	Service factor f_B	Model
125HP					
52	151900	34.41	27000	1.05	JRTR169DN280M4
64	123400	27.96	27000	1.30	JRTRF169DN280M4
75	104600	23.71	27000	1.50	
73	108400	24.57	27000	1.15	JRTR169DN280M4 JRTRF169DN280M4
82	96400	21.85	27000	1.20	
94	84000	19.03	26500	1.70	
105	74900	16.98	26100	1.75	JRTR169DN280M4
123	63900	14.48	25400	2.5	JRTRF169DN280M4
149	52900	11.99	24500	2.8	
174	45100	10.24	23700	3.3	
74	106700	24.19	14500	1.00	JRTR149DN280M4 JRTRF149DN280M4
87	90200	20.44	15200	1.20	JRTR149DN280M4 JRTRF149DN280M4
99	79600	18.04	15500	1.15	
114	69000	15.64	15800	1.65	
128	61400	13.91	16000	1.80	
149	52900	11.99	16200	2.2	JRTR149DN280M4
183	43000	9.74	16200	2.7	JRTRF149DN280M4
216	36400	8.26	15800	3.1	
246	32000	7.25	15300	2.4	
303	26000	5.89	14700	3.0	
357	22000	5.00	14200	3.5	
123	64000	14.51	8000	1.10	
139	56600	12.83	8290	1.25	
165	47600	10.79	8570	1.50	JRTR139DN280M4
205	38400	8.71	8750	1.80	JRTRF139DN280M4
235	33500	7.59	9060	1.35	
280	28100	6.38	8980	1.60	
346	22700	5.15	8810	1.80	
150HP					
64	147600	27.96	26100	1.10	JRTR169DN315S4
75	125100	23.71	25900	1.25	JRTRF169DN315S4
94	100400	19.03	25400	1.40	JRTR169DN315S4 JRTRF169DN315S4
105	89600	16.98	25000	1.50	
124	76400	14.48	24500	2.1	JRTR169DN315S4
149	63300	11.99	23700	2.4	JRTRF169DN315S4
175	54000	10.24	23100	2.8	
175HP					
76	145900	23.71	24500	1.10	JRTR169DN315M4 JRTRF169DN315M4
94	117100	19.03	24200	1.20	JRTR169DN315M4
105	104500	16.98	24000	1.25	JRTRF169DN315M4
124	89100	14.48	23600	1.80	JRTR169DN315M4
149	73800	11.99	23000	2.0	JRTRF169DN315M4
175	63000	10.24	22500	2.4	
200HP					
124	102000	14.48	22700	1.55	JRTR169DN315L4
149	84500	11.99	22300	1.80	JRTRF169DN315L4
175	72100	10.24	21800	2.1	

Output speed n_a [r/min]	Output torque T_a lbf · in	Ratio i	Permitted overhung load F_{Ra} [1] lbf	Service factor f_B	Model
225HP					
124	114700	14.48	21900	1.40	JRTR169DN315L4
149	95000	11.99	21600	1.60	JRTRF169DN315L4
175	81100	10.24	21200	1.85	
250HP					
124	127200	14.48	21000	1.25	JRTR169DN315H4
149	105400	11.99	20900	1.45	JRTRF169DN315H4
175	89900	10.24	20600	1.65	
300HP					
124	152800	14.48	19300	1.05	JRTR169DN315H4
149	126600	11.99	19400	1.20	JRTRF169DN315H4
175	108000	10.24	19400	1.40	

6. Features size table

JRTR19..~JRTR169..

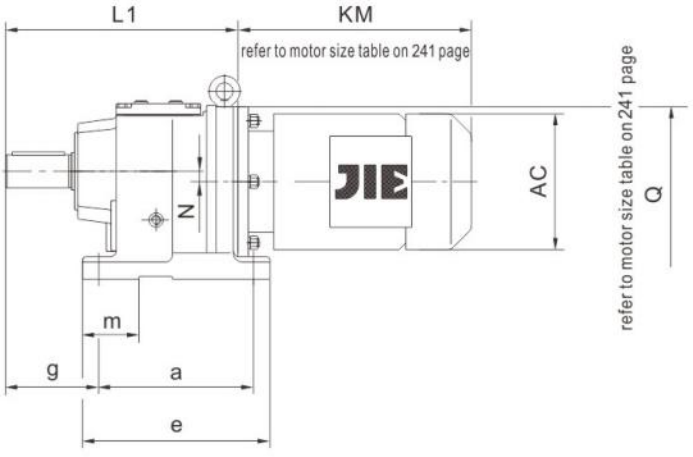

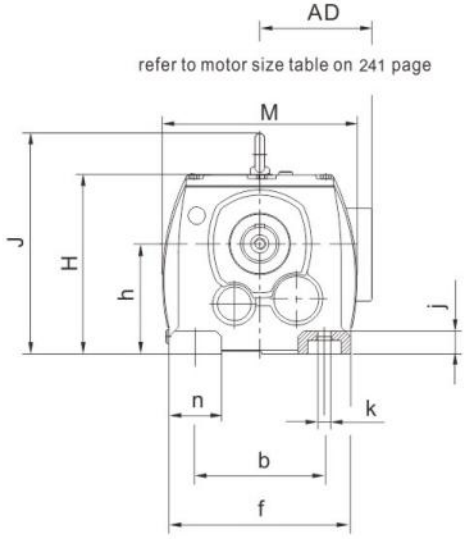

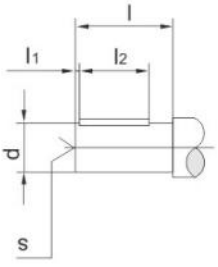

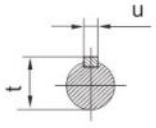

JRTR19F..~JRTR89F..

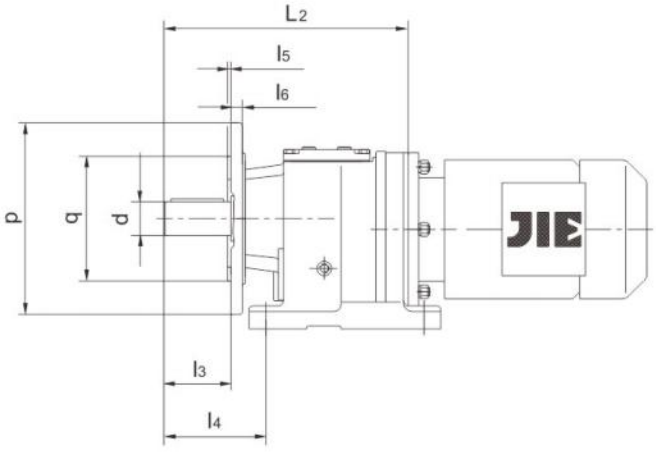

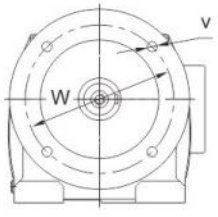



size	a b	e f	g	h	j	k	m n	Shaft dimension				
								d	l	l_1 l_2	s	t u
JRTR19.. JRTR19F..	110 110	131 135	58	$75_{-0.5}$	12	9	28 25	$0.750in_{-0.0005}$	40	0.26in 1.06in	1/4-20×0.63in	0.83in 0.1875in
JRTR29.. JRTR29F..	130 110	152 145	75	$90_{-0.5}$	18	9	27 32	$1.000in_{-0.0005}$	50	0.33in 1.31in	3/8-16×0.86in	1.11in 0.250in
JRTR39.. JRTR39F..	130 110	160 145	75	$90_{-0.5}$	18	9	40 35.5	$1.000in_{-0.0005}$	50	0.33in 1.31in	3/8-16×0.86in	1.11in 0.250in
JRTR49.. JRTR49F..	165 135	195 170	90	$115_{-0.5}$	24	13.5	50 43	$1.250in_{-0.0005}$	60	0.28in 1.69in	1/2-13×1.12in	1.36in 0.250in
JRTR59.. JRTR59F..	165 135	200 184	100	$115_{-0.5}$	24	13.5	60 52	$1.375in_{-0.0005}$	70	0.47in 1.81in	1/2-13×1.12in	1.51in 0.3125in
JRTR69.. JRTR69F..	195 150	235 204	100	$130_{-0.5}$	30	14	60 59	$1.375in_{-0.0005}$	70	0.47in 1.81in	1/2-13×1.12in	1.51in 0.3125in
JRTR79.. JRTR79F..	205 170	245 228	115	$140_{-0.5}$	30	17.5	60 66	$1.625in_{-0.001}$	80	0.45in 2.25in	5/8-11×1.37in	1.79in 0.375in
JRTR89.. JRTR89F..	260 215	310 290	140	$180_{-0.5}$	45	17.5	90 83	$2.125in_{-0.001}$	100	0.66in 2.63in	3/4-10×1.61in	2.35in 0.500in

size	flange dimension					H	J	L_1	L_2	M	N	Q
	p q	l_3	l_4	l_5 l_6	v w							
JRTR19.. JRTR19F..	120 80j6	40	66	3 8	6.5 100	134	/	207	215	140	0	/
JRTR29.. JRTR29F..	120 80j6	50	81	3 8	6.5 100	147	/	193	199	151	3.4	120
JRTR39.. JRTR39F..	120 80j6	50	81	3 8	6.6 100	149.5	/	201	207	156	10.1	120
JRTR49.. JRTR49F..	140 95j6	60	90	3 10	9 115	185	/	235	235	174	14	160
JRTR59.. JRTR59F..	160 110j6	70	100	3.5 10	9 130	186	/	257	257	200	11.2	160
JRTR69.. JRTR69F..	200 130j6	70	100	3.5 12	11 165	209.5	243	280	280	210	20.7	160
JRTR79.. JRTR79F..	250 180j6	80	115	4 15	13.5 215	228	269	300	300	236	15.9	200
JRTR89.. JRTR89F..	300 230j6	100	140	4 16	13.5 265	292.5	345	372	372	296	12.6	250

size	a b	e f	g	h	j	k	m n	Shaft dimension					H	J	L_1 M	N	Q
								d	l	l_1 l_2	s	t u					
JRTR99..	310 250	365 334	160	$225_{-0.5}$	55	22	100 95	$2.375in_{-0.001}$	120	0.55in 3.63in	3/4-10×1.61in	2.65in 0.625in	365	418	440 348	10.2	300
JRTR109..	370 290	440 400	185	$250_{-0.5}$	65	26	125 110	$2.875in_{-0.001}$	140	0.69in 4.13in	3/4-10×1.61in	3.20in 0.750in	408	475	495 409	20.4	350
JRTR139..	410 340	490 450	220	315_{-1}	70	33	130 110	$3.625in_{-0.001}$	170	0.66in 5.38in	1-8×2.12in	4.01in 0.875in	495	562	589 458	25.1	400
JRTR149..	500 380	590 530	260	355_{-1}	80	39	150 150	$4.375in_{-0.001}$	210	1.13in 6.00in	1-8×2.12in	4.82in 1.000in	565	637	695 540	33.4	450
JRTR169..	580 500	670 660	270	425_{-1}	100	39	160 160	$4.750in_{-0.001}$	210	0.85in 6.56in	1-8×2.12in	5.29in 1.250in	675	749	790 670	59.9	550

JRTRF19..~JRTRF169..

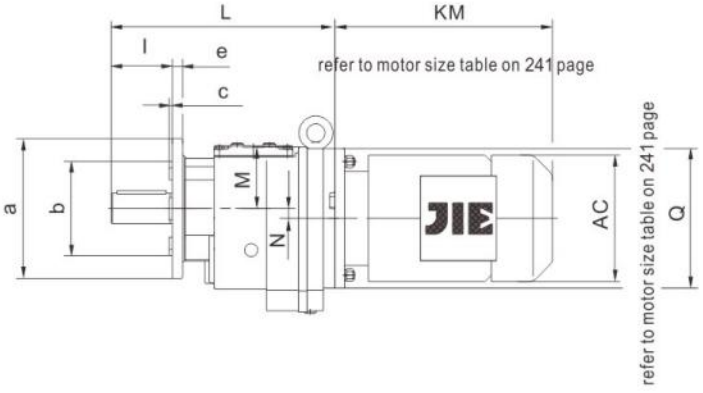

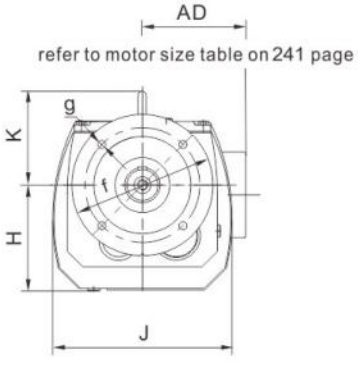

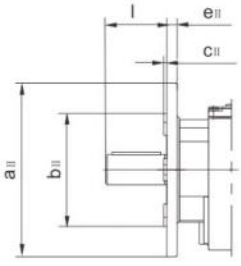

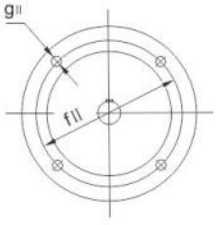

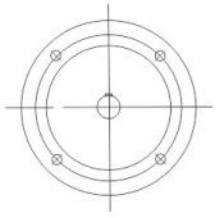

Flg.1

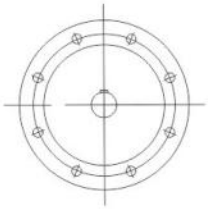

Flg.2

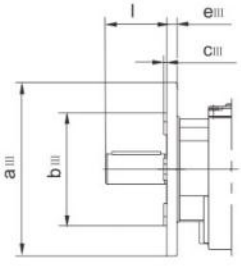

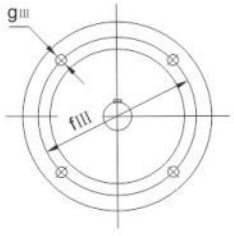

flange form

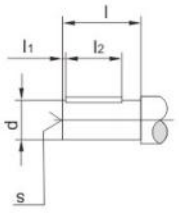

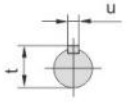

size	flange	a a II a III	b b II b III	c c II c III	e e II e III	f f II f III	g g II g III	H J K	L M N	Q	Shaft dimension				
											d	l	l_1 l_2	s	t u
JRTRF19..	Flg.1	120 140 /	80j6 95j6 /	3 3 /	8 9 /	100 115 /	6.5 8.5 /	74 136 /	215 59 0	/	0.750in$^{-0.0005}$	40	0.26in 1.06in	1/4-20×0.63in	0.83in 0.1875in
JRTRF29..	Flg.1	120 140 160	80j6 95j6 110j6	3 3 3.5	8 9 10	100 115 130	6.5 8.5 8.5	91 144 /	199 57 3.4	120	1.000in$^{-0.0005}$	50	0.33in 1.31in	3/8-16×0.86in	1.11in 0.250in
JRTRF39..	Flg.1	120 160 200	80j6 110j6 130j6	3 3.5 3.5	8 10 12	100 130 165	6.6 9 11	96 156 /	207 58.5 10.1	120	1.000in$^{-0.0005}$	50	0.33in 1.31in	3/8-16×0.86in	1.11in 0.250in
JRTRF49..	Flg.1	140 160 200	95j6 110j6 130j6	3 3.5 3.5	10 10 12	115 130 165	9 9 11	117 174 /	235 67.5 14	160	1.250in$^{-0.0005}$	60	0.28in 1.69in	1/2-13×1.12in	1.36in 0.250in
JRTRF59..	Flg.1	160 200 250	110j6 130j6 180j6	3.5 3.5 4	10 12 15	130 165 215	9 11 13.5	117 200 /	257 71 11.2	160	1.375in$^{-0.0005}$	70	0.47in 1.81in	1/2-13×1.12in	1.51in 0.3125in
JRTRF69..	Flg.1	200 250 /	130j6 180j6 /	3.5 4 /	12 15 /	165 215 /	11 13.5 /	134 217 113	280 81.5 20.7	160	1.375in$^{-0.0005}$	70	0.47in 1.81in	1/2-13×1.12in	1.51in 0.3125in
JRTRF79..	Flg.1	250 300 /	180j6 230j6 /	4 4 /	15 18.5 /	215 265 /	13.5 13.5 /	143 236 127.5	300 87 15.9	200	1.625in$^{-0.001}$	80	0.45in 2.25in	5/8-11×1.37in	1.79in 0.375in
JRTRF89..	Flg.1	300 350 /	230j6 250h6 /	4 5 /	16 18 /	265 300 /	13.5 17.5 /	183 292 162.5	372 112.5 12.6	250	2.125in$^{-0.001}$	100	0.66in 2.63in	3/4-10×1.61in	2.35in 0.500in
JRTRF99..	Flg.1 Flg.2 /	350 450 /	250h6 350h6 /	5 5 /	18 22 /	300 400 /	17.5 17.5 /	228 340 193	440 140 10.2	300	2.375in$^{-0.001}$	120	0.55in 3.63in	3/4-10×1.61in	2.65in 0.625in
JRTRF109..	Flg.1 Flg.2 /	350 450 /	250h6 350h6 /	5 5 /	20 22 /	300 400 /	17.5 17.5 /	255 409 224	495 158 20.4	350	2.875in$^{-0.001}$	140	0.69in 4.13in	3/4-10×1.61in	3.20in 0.750in
JRTRF139..	Flg.2	450 550 /	350h6 450h6 /	5 5 /	22 25 /	400 500 /	17.5 17.5 /	320 458 247	589 180 25.1	400	3.625in$^{-0.001}$	170	0.66in 5.38in	1-8×2.12in	4.01in 0.875in
JRTRF149..	Flg.2	450 550 /	350h6 450h6 /	5 5 /	22 25 /	400 500 /	17.5 17.5 /	361 540 285	695 210 33.4	450	4.375in$^{-0.001}$	210	1.13in 6.00in	1-8×2.12in	4.82in 1.000in
JRTRF169..	Flg.2	550 660 /	450h6 550h6 /	5 6 /	25 28 /	500 600 /	17.5 22 /	430 670 324	790 250 59.9	550	4.750in$^{-0.001}$	210	0.85in 6.56in	1-8×2.12in	5.29in 1.250in

JRTRX59..~JRTRX109..

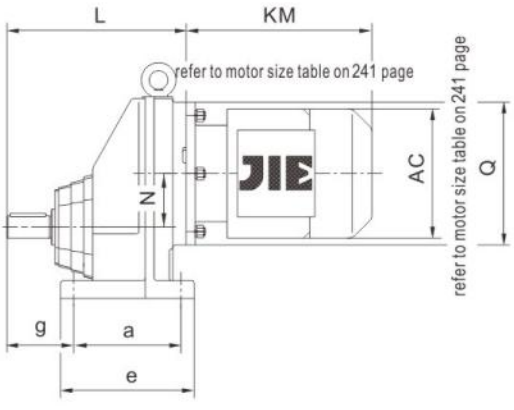

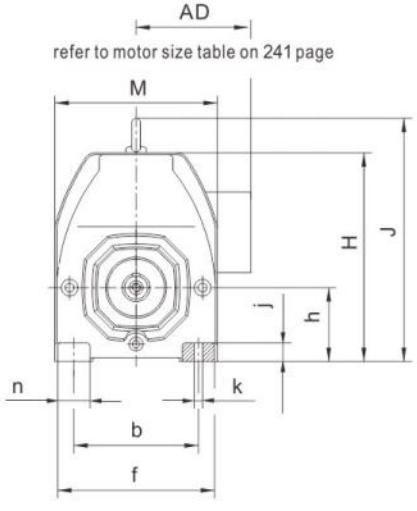

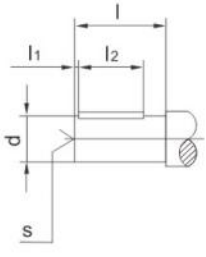

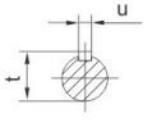

size	a b	e f	g	h	j	k	n	Shaft dimension					H	J	L M	N	Q
								d	l	l_1 l_2	s	t u					
JRTRX59..	110 125	137 156	56	$63_{-0.5}$	18	11	31	0.750in-0.0005	40	0.26in 1.06in	1/4-20×0.63in	0.83in 0.1875in	202	/	174 162	52	160
JRTRX69..	120 135	150 170	75	$80_{-0.5}$	20	13.5	35	1.000in-0.0005	50	0.33in 1.31in	3/8-16×0.86in	1.11in 0.250in	226	/	201 176	60	160
JRTRX79..	150 170	190 204	85	$90_{-0.5}$	25	17.5	50	1.250in-0.0005	60	0.28in 1.69in	1/2-13×1.12in	1.36in 0.250in	271	311	227 210	72	200
JRTRX89..	160 215	206 266	110	$100_{-0.5}$	30	17.5	60	1.625in -0.001	80	0.45in 2.25in	5/8-11×1.37in	1.79in 0.375in	332	372	269 272	93.5	250
JRTRX99..	185 250	240 320	140	$112_{-0.5}$	35	22	70	2.125in -0.001	100	0.66in 2.63in	3/4-10×1.61in	2.35in 0.500in	393	440	316 328	116	300
JRTRX109..	210 310	260 360	152	$140_{-0.5}$	45	22	80	2.375in -0.001	120	0.55in 3.63in	3/4-10×1.61in	2.65in 0.625in	459	506	364 370	130	350

JRTRXF59..~JRTRXF109..

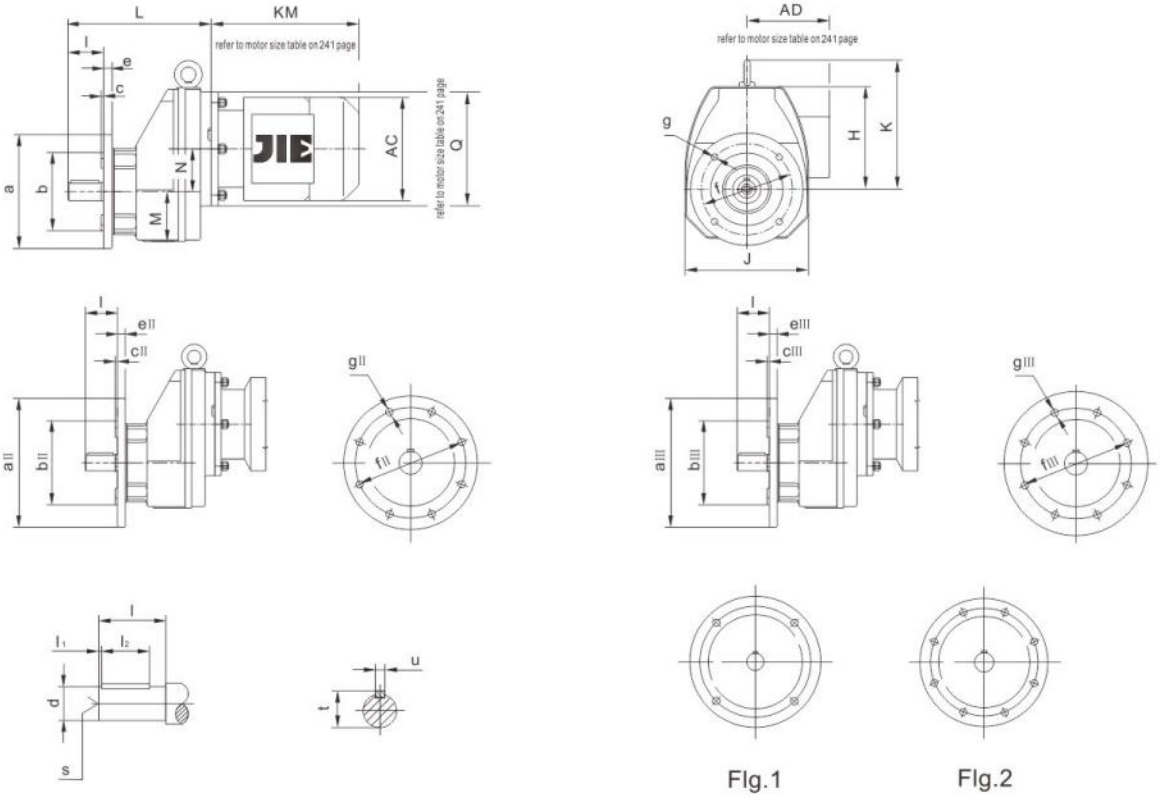

Flg.1 Flg.2

flange form

size	flange dimension	a a II a III	b b II b III	c c II c III	e e II e III	f f II f III	g g II g III	H J K	L M N	Q	Shaft dimension				
											d	l	l_1 l_2	s	t u
JRTRXF59..	Flg.1	140 160 200	95j6 110j6 130j6	3 3.5 3.5	10 10 12	115 130 165	9 9 11	139 162 /	174 62 52	160	0.750in$_{-0.0005}$	40	0.26in 1.06in	1/4-20×0.63in	0.83in 0.1875in
JRTRXF69..	Flg.1	160 200 250	110j6 130j6 180j6	3.5 3.5 4	10 12 15	130 165 215	9 11 13.5	147 175 /	201 70 60	160	1.000in$_{-0.0005}$	50	0.33in 1.31in	3/8-16×0.86in	1.11in 0.250in
JRTRXF79..	Flg.1	200 250 /	130j6 180j6 /	3.5 4 /	12 15 /	165 215 /	11 13.5 /	181 210 221	227 78 72	200	1.250in$_{-0.0005}$	60	0.28in 1.69in	1/2-13×1.12in	1.36in 0.250in
JRTRXF89..	Flg.1	250 300 /	180j6 230j6 /	4 4 /	15 16 /	215 265 /	13.5 13.5 /	232 272 272	269 98 93.5	250	1.625in $_{-0.001}$	80	0.45in 2.25in	5/8-11×1.37in	1.79in 0.375in
JRTRXF99..	Flg.1	300 350 /	230j6 250h6 /	4 5 /	16 18 /	265 300 /	13.5 17.5 /	281 328 328	316 118 116	300	2.125in $_{-0.001}$	100	0.66in 2.63in	3/4-10×1.61in	2.35in 0.500in
JRTRXF109..	Flg.1 Flg.2 /	350 450 /	250h6 350h6 /	5 5 /	18 22 /	300 400 /	17.5 17.5 /	319 370 366	364 135 130	350	2.375in $_{-0.001}$	120	0.55in 3.63in	3/4-10×1.61in	2.65in 0.625in

JRTR..AD.. Solid shaft input interface

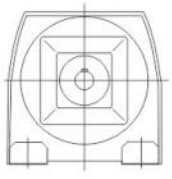

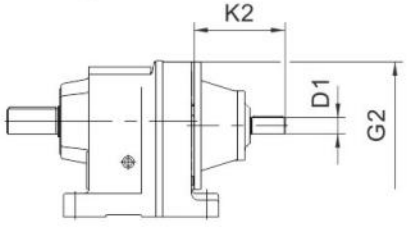

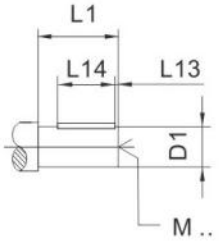

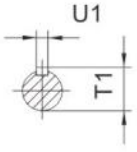

		G2	K2	D1	L1	L13	L14	T1	U1	M
JRTR..29	AD1	120	102	0.625in	40	4	32	0.70in	0.1875in	1/4-20x0.63
JRTR..39	AD2		130	0.750in	40	4	32	0.83in	0.1875in	1/4-20x0.63
JRTR..49 JRTR..59 JRTR..69	AD2	160	123	0.750in	40	4	32	0.83in	0.1875in	5/16-18x0.87
	AD3		159	0.875in	50	5	40	0.96in	0.1875in	5/16-18x0.87
JRTR..79	AD2	200	116	0.750in	40	4	32	0.83in	0.1875in	1/4-20x0.63
	AD3		151	0.875in	50	5	40	0.96in	0.1875in	5/16-18x0.87
	AD4		224	1.375in	80	5	70	1.51in	0.3125in	1/2-13x1.12
JRTR..89	AD2	250	111	0.750in	40	4	32	0.83in	0.1875in	1/4-20x1.12
	AD3		156	0.875in	60	5	50	0.96in	0.1875in	5/16-18x0.87
	AD4		219	1.375in	80	5	70	1.51in	0.3125in	1/2-13x1.12
	AD5		292	1.625in	110	10	70	1.79in	0.375in	5/8-11x1.38
JRTR..99	AD3	300	151	0.875in	60	5	50	0.96in	0.1875in	5/16-18x0.87
	AD4		214	1.375in	80	5	70	1.51in	0.3125in	1/2-13x1.12
	AD5		287	1.625in	110	10	70	1.79in	0.375in	5/8-11x1.38
	AD6		327	1.875in	110	10	80	2.09in	0.50in	5/8-11x1.38
JRTR..109	AD3	350	145	0.875in	60	5	50	0.96in	0.1875in	5/16-18x0.87
	AD4		208	1.375in	80	5	70	1.51in	0.3125in	1/2-13x1.12
	AD5		281	1.625in	110	10	70	1.79in	0.375in	5/8-11x1.38
	AD6		321	1.875in	110	10	80	2.09in	0.50in	5/8-11x1.38
JRTR..139	AD4	400	201	1.375in	80	5	70	1.51in	0.1875in	1/2-13x1.12
	AD5		274	1.625in	110	10	70	1.79in	0.3125in	5/8-11x1.38
	AD6		314	1.875in	110	10	80	2.09in	0.375in	5/8-11x1.38
	AD7		308	2.125in	110	10	90	2.35in	0.50in	3/4-10x1.61
JRTR..149	AD4	450	193	1.375in	80	5	70	1.51in	0.3125in	1/2-13x1.12
	AD5		266	1.625in	110	10	70	1.79in	0.375in	5/8-11x1.38
	AD6		306	1.875in	110	10	80	2.09in	0.50in	5/8-11x1.38
	AD7		300	2.125in	110	10	90	2.35in	0.50in	3/4-10x1.61
	AD8		383	2.750in	140	15	110	3.03in	0.625in	3/4-10x1.61

JRTR..R..

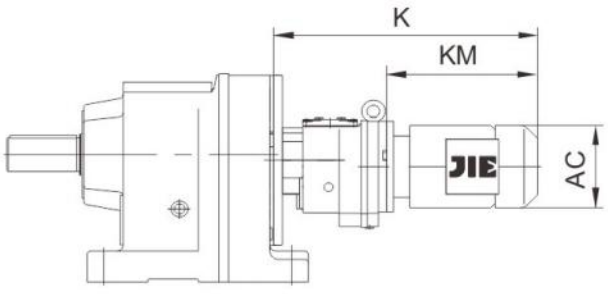

		AC	K	KM
JRTR..29R19 JRTR..39R19	DN63..	120	373	198
	DN71..	135	403	228
	DN80..	156	454	279
JRTR..49R39 JRTR..59R39 JRTR..69R39	DN63..	120	363	198
	DN71..	135	393	228
	DN80..	156	444	279
JRTR..79R39	DN63..	120	355	198
	DN71..	135	385	228
	DN80..	156	436	279
	DN90..	175	508	351
JRTR..89R59	DN63..	120	408	192
	DN71..	135	437	221
	DN80..	156	488	272
	DN90..	175	500	284
JRTR..99R59	DN63..	120	403	192
	DN71..	135	432	221
	DN80..	156	483	272
	DN90..	175	495	284
	DN100..	198	517	359
JRTR..109R79	DN63..	120	433	186
	DN71..	135	461	214
	DN80..	156	512	265
	DN90..	175	524	277
	DN100..	198	599	352
	DN112M	221	628	383
	DN132S	221	628	383
	DN132M	263	708	463
	DN160..	314	755	508
JRTR..139R79	DN63..	120	426	186
	DN71..	135	454	214
	DN80..	156	505	265
	DN90..	175	517	277
	DN100..	198	592	352
	DN112M	221	621	383
	DN132S	221	621	383
	DN132M	263	701	463
	DN160..	314	748	508

		AC	K	KM
JRTR..149R79	DN63..	120	418	186
	DN71..	135	446	214
	DN80..	156	497	265
	DN90..	175	509	277
	DN100..	198	584	352
	DN112M	221	613	383
	DN132S	221	613	383
	DN132M	263	693	463
	DN160..	314	740	508
JRTR..149R89	DN80..	156	540	260
	DN90..	175	552	272
	DN100..	198	627	347
	DN112M	221	626	378
	DN132S	221	626	378
	DN132M	263	736	458
	DN160..	314	783	503
	DN180M	355	704	624
	DN180L	355	952	672
JRTR..169R99	DN90..	175	592	267
	DN100..	198	667	342
	DN112M	221	696	373
	DN132S	221	696	373
	DN132M	263	776	453
	DN160..	314	823	498
	DN180M	355	944	619
	DN180L	355	992	667
JRTR..169R109	DN90L	175	702	320
	DN100..	198	718	336
	DN112M	221	747	367
	DN132S	221	747	367
	DN132M	263	827	447
	DN160..	314	874	492
	DN180M	355	995	613
	DN180L	355	1043	661
	DN200L	397	1056	674
	DN225S	445	1069	687
	DN225M	445	1094	712

Notes:The dimension of motor in the above table is only for reference .If you have special require, please our company.

7. JRTF Parallel Shaft Helical Gearmotor

1. Versions of JIE gearmotor

The following types of Parallel Shaft–Helical Gear motors can be supplied:

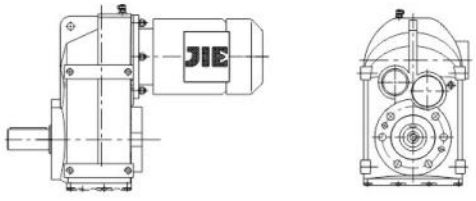

JRTF..D..
Solid shaft

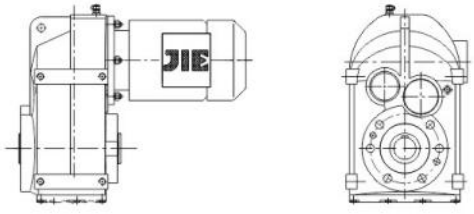

JRTFA..B D..
Hollow shaft with key

JRTFV..B D..
Splined hollow shaft

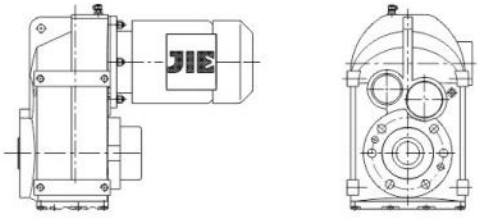

JRTFH..B D..
Shrink disk hollow shaft

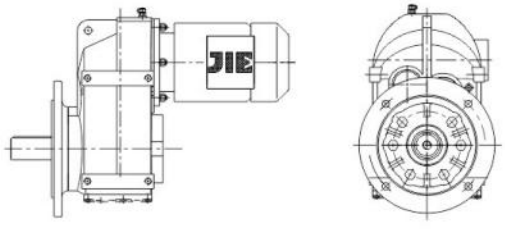

JRTFF..D..
Solid shaft
Flange mount (D & B5 style flange with through holes)

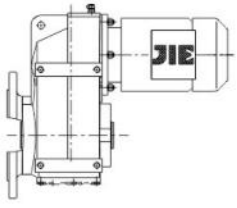



JRTFAF..D..
Hollow shaft with key
Flange mount(D & B5 style flange with through holes)

JRTFVF..D..
Hollow shaft with key
Flange mount(D & B5 style flange with through holes)

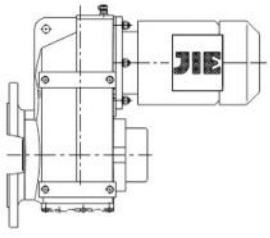

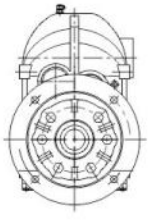

JRTFHF..D..
Shrink disk hollow shaft
Flange mount (D & B5 style flange with through holes)

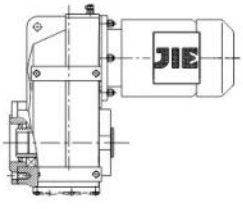

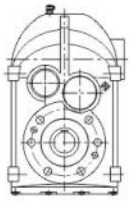

JRTFAZ..D..
Hollow shaft with key
Face mount (C & B14 sytle flange with tapped holes)

JRTFVZ..D..
Hollow shaft with key
Face mount (C & B14 sytle flange with tapped holes)

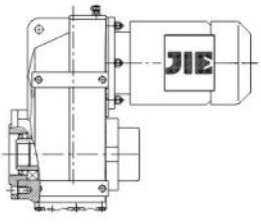

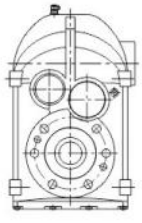

JRTFHZ..D..
Shrink disk hollow shaft
Face mount (C & B14 sytle flange with tapped holes)

2. JRTF Parallel Shaft Helical Gearmotor Model Description



J	RTF	A	69	- G	DN	80	M	4	- BE	- HF	- TF	- 109.04	- M1	- 180°	- IS
1	2	3	4	5	6	7	8	9	10	11	12	13	14	15	16

1 Enterprise Code

J- JIE Drive

2 Product Code

RTF-Parallel Shaft Helical Geared Motor

3 Unit Model

No Code- Foot-mounted
F- Flange-mounted
A- Hollow Shaft-mounted
AF- Flange-mounted with Hollow Shaft

4 Gear Unit Size

69- Gearmotor Size 69

5 Torque Arm

No Code- No Torque Arm
G- Torque Arm

6 Electric Motor

D– Three Phase Asychronous Motor(IP 54)
DU/DN – Energy efficiency rating class 2/class 3
YB–Flame–proof Three Phase Asychronous Motor
YGP–Table Roller Three Phase Asychronous Motor
YZP– Metallurgy Hoist Froquency Variable Motor
YD– Multi Speed Three Phase Motor

7 Frame Size

80– Motor Center Height 80mm

8 Stator Length

S、M、L

9 Number of Poles

4- 4Poles

10 Brake

No Code-No Brakes
BE-Brakes

11 Brake Release

No Code-No brake release
HF- Screw release(lock in the brake release position)
Brake release
HR-Handle release(automatic braking position)

12 Thermal Protection

No Code-No Thermistor
TF- Thermistor Sensor
TF- Thermistor protection (PTC thermistor)
TH- Thermostat protection (Bimetal switch)

13 Ratio

109.04- Ratio 109.04

14 Mounting Position

M1-Mounting Position M1

15 Terminal Box Position

No Code-Terminal Box Position is 0°
180° - Terminal Box Position is 180°

16 16 Inch Symbol

IS-Inch size

3. Type of combination

The below is combination table between gear box and electromotor in each list the ratio range.

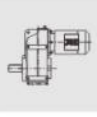

Motor power hp / Type	Stages	0.16~0.50	0.75~1	1.5~2	3~4	5	7.5	10
JRTF/FF/FA..B/FAF39	2	4.22-7.44 8.97-23.63	3.77-23.63	3.77-20.57	3.77-6.74 8.01-14.33 17.03			
JRTF/FF/FA..B/FAF39	3	23.88-128.51	23.88-100.36	23.88-51.70 58.32-86.53	23.88-31.69 38.31 51.70 58.32 70.50			
JRTF/FF/FA..B/FAF49	2	6.34-8.96 13.93-30.86	4.99-30.86	4.99-30.86	4.99-25.72			
JRTF/FF/FA..B/FAF49	3	28.88-190.76	28.88-150.06	28.88-130.07	28.88-56.49 68.09-105.09			
JRTF/FF/FA..B/FAF59	2	6.58-9.31 13.52-40.13	5.18-34.24	5.18-29.94	5.18-24.96	5.18-21.17		
JRTF/FF/FA..B/FAF59	3	30.15-199.70	30.15-157.09	30.15-136.16	30.15-58.97 83.46-110.01	30.15-50.10 83.46-93.47		
JRTF/FF/FA..B/FAF69	2	7.53-9.08 18.29-36.30	5.95-9.08 14.46-36.30	3.97-36.30	3.97-32.08	3.97-27.41	3.97-22.05	3.97-22.05
JRTF/FF/FA..B/FAF69	3	43.20-228.99	34.01-195.39	34.01-170.85	34.01-142.40	34.01-67.65 90.59-120.79	34.01-53.73 90.59-95.94	34.01-53.73 90.59-95.94
JRTF/FF/FA..B/FAF79	2	21.43-36.58	8.26-9.30 17.49-36.58	5.76-9.30 12.20-36.58	4.28-36.58	4.28-31.51	4.28-25.50	4.28-25.50
JRTF/FF/FA..B/FAF79	3	48.37-72.50 94.93-281.71	38.23-225.79	25.54-198.31	25.54-166.47	25.54-142.27	25.54-58.32 75.02-114.45	25.54-58.32 75.02-114.45
JRTF/FF/FA..B/FAF89	2		23.68-33.92	7.35-8.29 17.12-33.92	5.63-8.29 13.12-33.92	5.63-8.29 13.12-33.92	4.12-33.92	4.12-33.92
JRTF/FF/FA..B/FAF89	3		109.49-270.68	39.30-50.36 76.39-270.68	29.20-228.93	29.20-197.20	29.20-159.61	29.20-159.61
JRTF/FF/FA..B/FAF99	2			9.06 22.11-43.28	7.07-9.06 17.25-43.28	7.07-9.06 17.25-43.28	4.57-43.28	4.57-43.28
JRTF/FF/FA..B/FAF99	3			58.06-72.29 80.31 89.85-97.58 112.99-276.77	44.49-72.29 80.31-276.77	44.49-72.29 80.31-276.77	32.50-223.88	32.50-223.88
JRTF/FF/FA..B/FAF109	2				21.76-33.79	21.76-33.79	7.40-9.69 14.67-33.79	7.40-9.69 14.67-33.79
JRTF/FF/FA..B/FAF109	3				58.12-83.99 92.47-254.40	58.12-83.99 92.47-254.40	37.61-254.40	37.61-254.40
JRTF/FF/FA..B/FAF129	2							7.88-8.86 14.55-26.86
JRTF/FF/FA..B/FAF129	3							37.28-170.83



Motor power hp / Type	Stages	12.3	15	20	25~30	40
JRTF/FF/FA..B/FAF79	2	4.28-19.70	4.28-19.70			
JRTF/FF/FA..B/FAF79	3	25.54-43.58	25.54-43.58			
JRTF/FF/FA..B/FAF89	2	4.12-26.50	4.12-26.50	4.12-26.50	4.12-21.32	
JRTF/FF/FA..B/FAF89	3	29.20-123.29	29.20-123.29	29.20-123.29	29.20-50.36	
JRTF/FF/FA..B/FAF99	2	4.57-33.91	4.57-33.91	4.57-33.91	4.57-27.44	4.57-22.11
JRTF/FF/FA..B/FAF99	3	32.50-89.85 102.16-174.87	32.50-89.85 102.16-174.87	32.50-89.85 102.16-174.87	32.50-75.63 86.59 102.16-140.71	32.50-58.06 75.63 86.59 102.16-112.99
JRTF/FF/FA..B/FAF109	2	6.22-9.69 12.33-33.79	6.22-9.69 12.33-33.79	6.22-9.69 12.33-33.79	6.22-33.79	6.22-27.57
JRTF/FF/FA..B/FAF109	3	31.80-199.31	31.80-199.31	31.80-199.31	31.80-161.28	31.80-74.52 88.49 101.38-129.97
JRTF/FF/FA..B/FAF129	2	6.80-8.86 12.54-26.86	6.80-8.86 12.54-26.86	6.80-8.86 12.54-26.86	5.52-26.86	4.68-26.86
JRTF/FF/FA..B/FAF129	3	31.33-170.83	31.33-170.83	31.33-170.83	25.30-153.67	25.30-125.37
JRTF/FF/FA..B/FAF159	2		16.85-53.55	16.85-53.55	13.96-43.94	11.92-35.75
JRTF/FF/FA..B/FAF159	3		40.06-267.43	40.06-267.43	32.55-217.62	27.60-178.20
JRTF/FH..B169	2	11.37–36.12	11.37–36.12	11.37–36.12	9.6–29.64	8.19–24.12
JRTF/FH..B169	3	24.56–32.3 57.51–182.73	24.56–32.3 57.51–182.73	24.56–32.3 57.51–182.73	20.35–32.3 57.51–149.94	17.37–122

Motor power hp / Type	Stages	50~60	75	100~125	150~200	250~300
JRTF/FF/FA..B/FAF109	2	6.22-27.57				
JRTF/FF/FA..B/FAF109	3	31.80-74.52 88.49 101.38-129.97				
JRTF/FF/FA..B/FAF129	2	4.68-26.86	4.68-21.38	4.68-21.38		
JRTF/FF/FA..B/FAF129	3	25.30-125.37	25.30-55.31 75.41-98.95	25.30-55.31 75.41-98.95		
JRTF/FF/FA..B/FAF159	2	11.92-35.75	11.92-28.60	11.92-28.60	11.92-22.16	11.92-16.85
JRTF/FF/FA..B/FAF159	3	27.60-178.20	27.60-68.28 96.53-141.80	27.60-68.28 96.53-141.80	27.60-52.24 96.53-108.49	27.60-40.06
JRTF/FH..B169	2	8.19–24.12	8.19–19.29	8.19–19.29	8.19–14.95	8.19–11.37
JRTF/FH..B169	3	17.37–122	17.37–97.6	17.37–97.6	17.37–75.62	17.37–24.56 40.67–57.51

4. Ratio and Max. Torque

JRTF39-59 n_e=1700r/min

JRTF39			1760 lbf · in	
i	n_a [r/min]	M_{amax} lbf · in	F_{Ra} lbf	AD
3-stage				
128.51	13	1760	960	AD1
117.88	14	1760	960	
100.36	17	1760	960	
86.53	20	1760	960	
80.65	21	1760	960	
70.50	24	1760	960	
66.09	26	1760	960	
58.32	29	1760	960	
54.54	31	1760	960	
51.70	33	1760	960	
47.02	36	1760	960	AD2
43.83	39	1760	960	
38.31	44	1760	960	
35.91	47	1760	930	
31.69	54	1760	880	
28.09	61	1760	830	
23.88	71	1760	770	
2-stage				
23.63	72	1760	765	AD2
20.57	83	1760	715	
19.27	88	1760	690	
17.03	100	1760	645	
15.81	108	1760	625	
14.33	119	1760	590	
12.87	132	1760	555	
11.08	153	1680	530	
10.42	163	1630	520	
8.97	190	1540	500	
8.01	212	1500	475	
7.44	228	1280	475	
6.74	252	1230	460	
6.05	281	1190	445	
5.21	326	1100	430	
4.90	347	1060	425	
4.22	403	970	415	
3.77	451	920	400	

JRTF49			3530 lbf · in	
i	n_a [r/min]	M_{amax} lbf · in	F_{Ra} lbf	AD
3-stage				
190.76	8.9	3530	1330	AD1
175.38	9.7	3530	1330	
150.06	11	3530	1330	
130.07	13	3530	1330	
121.57	14	3530	1330	
105.09	16	3530	1330	
89.29	19	3530	1330	
79.72	21	3530	1330	
68.09	25	3530	1330	
65.36	26	3530	1330	AD2
56.49	30	3530	1330	
48.00	35	3530	1330	
42.86	40	3530	1330	
36.61	46	3530	1330	
34.29	50	3530	1290	
28.88	59	3530	1180	
2-stage				
30.86	55	3530	1220	AD2
29.32	58	3530	1190	
25.72	66	3530	1110	
21.82	78	3530	1020	
19.70	86	3530	970	
17.33	98	3530	900	
16.36	104	3530	870	
13.93	122	3530	795	
12.66	134	3530	750	
10.97	155	3530	685	
8.96	190	2910	650	
7.88	216	3360	515	
7.44	228	3360	490	
6.34	268	3090	485	
5.76	295	3000	465	
4.99	341	2830	450	

JRTF59			5300 lbf · in	
i	n_a [r/min]	M_{amax} lbf · in	F_{Ra} lbf	AD
3-stage				
199.70	8.5	5300	2070	AD2
183.60	9.3	5300	2070	
157.09	11	5300	2070	
136.16	12	5300	2070	
127.27	13	5300	2070	
110.01	15	5300	2070	
93.47	18	5300	2070	
83.46	20	5300	2070	
72.98	23	5300	2070	
68.22	25	5300	2070	
58.97	29	5300	2070	
50.10	34	5300	1980	
44.73	38	5300	1880	
38.21	44	5300	1740	
35.79	47	5300	1690	
30.15	56	5220	1560	
2-stage				
40.13	42	2560	2200	AD2
34.24	50	4420	1780	
29.94	57	4820	1620	
28.45	60	4730	1590	
24.96	68	5080	1440	
21.17	80	5300	1290	AD3
19.11	89	5300	1220	
16.81	101	5300	1130	
15.88	107	5300	1100	
13.52	126	5300	1000	
12.29	138	5300	940	
10.64	160	5300	860	
9.31	183	3710	960	
8.19	208	3710	900	
7.73	220	3710	870	
6.58	258	3710	790	
5.98	284	3710	745	
5.18	328	3670	690	



JRTF69-89 n_e=1700r/min



JRTF69			7250 lbf · in	
i	n_a [r/min]	M_{amax} lbf · in	F_{Ra} lbf	AD
3-stage				
228.99	7.4	7250	2320	
195.39	8.7	7250	2320	
170.85	10.0	7250	2320	
162.31	10	7250	2320	
142.40	12	7250	2320	
120.79	14	7250	2320	
109.04	16	7250	2320	
95.94	18	7250	2320	AD2
90.59	19	7250	2320	
79.76	21	7250	2320	
67.65	25	7250	2320	
61.07	28	7250	2320	
53.73	32	7250	2320	
50.74	34	7250	2320	
43.20	39	7250	2320	
39.26	43	6900	2320	
34.01	50	6540	2470	
2-stage				
36.30	47	7250	2320	AD2
32.08	53	7250	2320	
27.41	62	7250	2320	
25.13	68	7250	2320	
22.05	77	7250	2320	
20.90	81	7250	2320	
18.29	93	7250	2320	
16.48	103	7250	2320	
14.46	118	7250	2320	
12.76	133	7250	2320	
11.31	150	7250	2320	AD3
9.66	176	7250	2240	
9.08	187	4680	2370	
8.60	198	5040	2270	
7.53	226	5390	2100	
6.78	251	5480	2000	
5.95	286	5390	1910	
5.25	324	5220	1830	
4.66	365	4950	1780	
3.97	428	4420	1740	

JRTF79			13200 lbf · in	
i	n_a [r/min]	M_{amax} lbf · in	F_{Ra} lbf	AD
3-stage				
281.71	6.0	13200	3530	
262.93	6.5	13200	3530	
225.79	7.5	13200	3530	
198.31	8.6	13200	3530	
188.40	9.0	13200	3530	
166.47	10	13200	3530	
142.27	12	13200	3530	
130.42	13	13200	3530	
114.45	15	13200	3530	
108.46	16	13200	3530	
94.93	18	13200	3530	AD2
85.52	20	13200	3530	
75.02	23	13200	3530	
72.50	23	13200	3530	
66.46	26	13200	3530	
58.32	29	13200	3530	
55.27	31	13200	3530	
48.37	35	13200	3530	
43.58	39	13200	3530	
38.23	44	13200	3530	
33.74	50	13200	3530	
29.91	57	13200	3530	
25.54	67	12800	3610	
2-stage				
36.58	46	9820	4010	
31.51	54	12200	3700	
28.75	59	12600	3640	AD3
25.50	67	13200	3530	
21.43	79	13200	3530	
19.70	86	13200	3530	
17.49	97	13200	3530	
15.64	109	13200	3420	
14.06	121	13200	3280	
12.20	139	13200	3090	
10.93	156	13200	2950	
9.30	183	9550	2860	AD4
8.26	206	9550	2720	
7.39	230	9550	2590	
6.64	256	9550	2470	
5.76	295	9550	2320	
5.16	329	9550	2210	
4.28	397	8930	2100	

JRTF89			26500 lbf · in	
i	n_a [r/min]	M_{amax} lbf · in	F_{Ra} lbf	AD
3-stage				
270.68	6.3	26500	4450	
255.37	6.7	26500	4450	
228.93	7.4	26500	4450	
197.20	8.6	26500	4450	
179.97	9.4	26500	4450	
159.61	11	26500	4450	AD2
134.16	13	26500	4450	
123.29	14	26500	4450	
109.49	16	26500	4450	
97.89	17	26500	4450	
88.01	19	26500	4450	
76.39	22	26500	4200	
68.40	25	26500	3960	
56.75	30	26500	3560	
50.36	34	26000	3370	AD3
45.28	38	24900	3270	
39.30	43	24000	3090	
35.19	48	23000	2990	AD4
29.20	58	22200	2760	
2-stage				
33.92	50	23000	2930	
28.78	59	21600	2790	
26.50	64	26500	2180	
23.68	72	26500	2000	
21.32	80	26500	1840	
19.31	88	26500	1700	
17.12	99	26500	1530	
15.48	110	26500	1390	
13.12	130	26500	1180	
11.46	148	26500	1010	AD5
9.58	177	25400	910	
8.29	205	13500	1780	
7.35	231	13500	1650	
6.65	256	13500	1550	
5.63	302	13500	1390	
4.92	346	13500	1260	
4.12	413	12900	1170	

JRTF99-129 n_e=1700r/min

JRTF99			38000 lbf · in	
i	n_a [r/min]	M_{amax} lbf · in	F_{Ra} lbf	AD
3-stage				
276.77	6.1	38000	6720	AD3
253.41	6.7	38000	6720	
223.88	7.6	38000	6720	
189.92	9.0	38000	6720	
174.87	9.7	38000	6720	
156.30	11	38000	6720	
140.71	12	38000	6720	
127.42	13	38000	6720	
112.99	15	38000	6720	
102.16	17	38000	6720	
97.58	17	38000	6720	
89.85	19	38000	6720	
86.59	20	38000	6720	
80.31	21	38000	6540	
75.63	22	38000	6350	
72.29	24	38000	6200	
65.47	26	38000	5890	AD4
58.06	29	38000	5520	
52.49	32	38000	5230	
44.49	38	38000	4770	
38.86	44	38000	4410	
32.50	52	38000	3960	
2-stage				
43.28	39	27100	5660	AD4
36.64	46	27100	5230	
33.91	50	38000	4060	AD5
30.39	56	38000	3800	
27.44	62	38000	3550	
24.92	68	38000	3340	
22.11	77	38000	3070	
20.07	85	38000	2870	
17.25	99	38000	2560	
15.06	113	38000	2300	
12.77	133	38000	1990	AD6
11.16	152	36200	1910	
9.06	188	20800	2680	
8.22	207	20800	2530	
7.07	240	20800	2300	
6.17	276	19900	2200	
5.23	325	19000	2070	
4.57	372	18100	1980	

JRTF109			69300 lbf · in	
i	n_a [r/min]	M_{amax} lbf · in	F_{Ra} lbf	AD
3-stage				
254.40	6.7	67900	11200	AD3
215.37	7.9	67900	11200	
199.31	8.5	67900	11200	
178.64	9.5	67900	11200	
161.28	11	67900	11200	
146.49	12	67900	11200	
129.97	13	67900	11200	
117.94	14	67900	11200	
101.38	17	67900	11200	AD4
92.47	18	67900	11200	
88.49	19	67900	11200	
83.99	20	67900	11200	
74.52	23	67900	11000	
67.62	25	67900	10600	
58.12	29	67900	9880	
50.73	34	67900	9300	
43.03	40	67900	8640	AD5
37.61	45	67900	8110	
31.80	53	67900	7390	
2-stage				
33.79	50	65400	7880	AD6
27.57	62	69300	6640	
25.14	68	69300	6260	
21.76	78	69300	5670	
19.20	89	69300	5170	
16.58	103	69300	4600	
14.67	116	67900	4300	
12.33	138	61900	4390	
9.96	171	57500	4180	
9.69	175	43400	4660	
8.37	203	42400	4350	
7.40	230	40700	4220	
6.22	273	40700	3730	
5.03	338	40700	3140	

JRTF129			106100 lbf · in	
i	n_a [r/min]	M_{amax} lbf · in	F_{Ra} lbf	AD
3-stage				
170.83	10.0	106100	20200	AD4
153.67	11	106100	20200	
125.37	14	106100	19000	
114.34	15	106100	18300	
98.95	17	106100	17200	
87.31	19	106100	16400	
75.41	23	106100	15400	
70.07	24	106100	14900	AD5
63.91	27	106100	14300	
55.31	31	106100	13300	
48.80	35	106100	12500	
42.15	40	106100	11500	
37.28	46	106100	10700	AD6
31.33	54	106100	9660	AD7
25.30	67	106100	8400	
2-stage				
26.86	63	75200	11500	AD6
24.57	69	75200	11000	
21.38	80	106100	7440	AD8
18.87	90	97300	7680	
16.36	104	97300	6930	
14.55	117	97300	6340	
12.54	136	88400	6550	
10.19	167	84000	6060	
8.86	192	61900	7490	
7.88	216	53000	7650	
6.80	250	61900	6610	
5.52	308	53000	6540	
4.68	363	53000	6060	



JRTF159-169 n_e=1700r/min



JRTF159			159200 lbf · in	
i	n_a [r/min]	M_{amax} lbf · in	F_{Ra} lbf	AD
267.43	6.4	159200	22500	AD5
217.62	7.8	159200	22500	
178.20	9.5	159200	22500	
162.96	10	159200	22500	
141.80	12	159200	22500	
125.14	14	159200	22500	
108.49	16	159200	21900	
96.53	18	159200	20800	
85.80	20	159200	19800	
78.46	22	159200	19100	
68.28	25	159200	18000	
60.25	28	159200	17000	
52.24	33	159200	16000	AD6
46.48	37	159200	15200	AD7
40.06	42	159200	14100	
32.55	52	159200	12800	
27.60	62	159200	11800	AD8
2-stage				
53.55	32	70700	20600	AD5
43.94	39	88400	18400	AD6
35.75	48	97300	16500	
28.60	59	150400	12500	AD8
25.43	67	132700	12700	
22.16	77	159200	10500	
19.77	86	150400	10400	
16.85	101	159200	9060	
13.96	122	150400	8570	
11.92	143	141500	8270	

JRTF39/49R19,JRTF59R39 n_e=1700r/min

JRTF39R19				1760 lbf · in	
i	n_a [r/min]	Stage F39	R19	M_{amax} lbf · in	F_{Ra} lbf
8193	0.21	3	3	1760	960
7064	0.24	3	3	1760	960
6585	0.26	3	3	1760	960
5756	0.30	3	3	1760	960
4963	0.34	3	3	1760	960
4434	0.38	3	3	1760	960
3875	0.44	3	3	1760	960
3392	0.50	3	3	1760	960
2965	0.57	3	3	1760	960
2587	0.66	3	3	1760	960
2284	0.74	3	3	1760	960
1997	0.85	3	3	1760	960
1929	0.88	2	3	1760	960
1742	0.98	3	3	1760	960
1679	1.0	2	3	1760	960
1550	1.1	2	3	1760	960
1545	1.1	3	3	1760	960
1370	1.2	3	2	1760	960
1356	1.3	2	3	1760	960
1198	1.4	3	2	1760	960
1180	1.4	2	3	1760	960
1047	1.6	3	2	1760	960
1044	1.6	2	3	1760	960
915	1.9	3	2	1760	960
914	1.9	2	3	1760	960
808	2.1	2	3	1760	960
807	2.1	3	2	1760	960
707	2.4	3	2	1760	960
698	2.4	2	3	1760	960
617	2.8	3	2	1760	960
616	2.8	2	3	1760	960
544	3.1	2	3	1760	960
538	3.2	3	2	1760	960
477	3.6	3	2	1760	960
466	3.6	2	3	1760	960
412	4.1	3	2	1760	960
411	4.1	2	3	1760	960
365	4.7	3	2	1760	960
364	4.7	2	3	1760	960
326	5.2	2	2	1760	960
322	5.3	3	2	1760	960
285	6.0	2	2	1760	960
278	6.1	3	2	1760	960
250	6.8	2	2	1760	960
242	7.0	3	2	1760	960
221	7.7	3	2	1760	960
219	7.8	2	2	1760	960
195	8.7	3	2	1760	960
186	9.1	2	2	1760	960
168	10	3	2	1760	960
167	10	2	2	1760	960
147	12	3	2	1760	960
145	12	2	2	1760	960
129	13	2	2	1760	960
127	13	3	2	1760	960
121	14	3	2	1760	960
118	14	2	2	1760	960
108	16	3	2	1760	960
98	17	2	2	1760	960
91	19	3	2	1760	960
87	20	2	2	1760	960

JRTF49R19				3530 lbf · in	
i	n_a [r/min]	Stage F49	R19	M_{amax} lbf · in	F_{Ra} lbf
12251	0.14	3	3	3530	1330
10619	0.16	3	3	3530	1330
9846	0.17	3	3	3530	1330
8534	0.20	3	3	3530	1330
7460	0.23	3	3	3530	1330
6536	0.26	3	3	3530	1330
5746	0.30	3	3	3530	1330
5022	0.34	3	3	3530	1330
4401	0.39	3	3	3530	1330
3883	0.44	3	3	3530	1330
3443	0.49	3	3	3530	1330
2976	0.57	3	3	3530	1330
2629	0.65	3	3	3530	1330
2519	0.67	2	3	3530	1330
2394	0.71	2	3	3530	1330
2304	0.74	3	3	3530	1330
2172	0.78	2	3	3530	1330
2033	0.84	3	3	3530	1330
2025	0.84	2	3	3530	1330
1785	0.95	3	2	3530	1330
1770	0.96	2	3	3530	1330
1578	1.1	3	2	3530	1330
1576	1.1	2	3	3530	1330
1364	1.2	3	2	3530	1330
1363	1.2	2	3	3530	1330
1203	1.4	3	2	3530	1330
1192	1.4	2	3	3530	1330
1061	1.6	2	3	3530	1330
1049	1.6	3	2	3530	1330
931	1.8	2	3	3530	1330
918	1.9	3	2	3530	1330
822	2.1	2	3	3530	1330
809	2.1	3	2	3530	1330
706	2.4	2	3	3530	1330
700	2.4	3	2	3530	1330
622	2.7	3	2	3530	1330
619	2.7	2	3	3530	1330
543	3.1	3	2	3530	1330
524	3.2	2	2	3530	1330
489	3.5	2	2	3530	1330
475	3.6	3	2	3530	1330
427	4.0	2	2	3530	1330
419	4.1	3	2	3530	1330
381	4.5	2	2	3530	1330
370	4.6	3	2	3530	1330
334	5.1	2	2	3530	1330
324	5.2	3	2	3530	1330
295	5.8	2	2	3530	1330
288	5.9	3	2	3530	1330
253	6.7	2	2	3530	1330
249	6.8	3	2	3530	1330
218	7.8	3	2	3530	1330
217	7.8	2	2	3530	1330
193	8.8	3	2	3530	1330
190	8.9	2	2	3530	1330
178	9.6	2	2	3530	1330
175	9.7	3	2	3530	1330
149	11	2	2	3530	1330
147	12	3	2	3530	1330
131	13	2	2	3530	1330
130	13	3	2	3530	1330

JRTF59R39				5300 lbf · in	
i	n_a [r/min]	Stage F59	R39	M_{amax} lbf · in	F_{Ra} lbf
14832	0.11	3	3	5300	2070
13604	0.12	3	3	5300	2070
12602	0.13	3	3	5300	2070
11252	0.15	3	3	5300	2070
9986	0.17	3	3	5300	2070
8787	0.19	3	3	5300	2070
7908	0.21	3	3	5300	2070
6913	0.25	3	3	5300	2070
6030	0.28	3	3	5300	2070
5289	0.32	3	3	5300	2070
4654	0.37	3	3	5300	2070
4060	0.42	3	3	5300	2070
3564	0.48	3	3	5300	2070
3161	0.54	3	3	5300	2070
2737	0.62	3	3	5300	2070
2409	0.71	3	3	5300	2070
2131	0.80	3	3	5300	2070
1840	0.92	3	3	5300	2070
1623	1.0	3	3	5300	2070
1439	1.2	3	3	5300	2070
1238	1.4	3	3	5300	2070
2854	0.60	2	3	5300	2070
2576	0.66	2	3	5300	2070
2266	0.75	2	3	5300	2070
2012	0.84	2	3	5300	2070
1791	0.95	2	3	5300	2070
1617	1.1	2	3	5300	2070
1422	1.2	2	3	5300	2070
1243	1.4	2	3	5300	2070
1066	1.6	2	3	5300	2070
949	1.8	2	3	5300	2070
856	2.0	2	3	5300	2070
749	2.3	2	3	5300	2070
658	2.6	2	3	5300	2070
549	3.1	2	3	5300	2070
483	3.5	3	3	5300	2070
1106	1.5	3	2	5300	2070
967	1.8	3	2	5300	2070
851	2.0	3	2	5300	2070
738	2.3	3	2	5300	2070
646	2.6	3	2	5300	2070
558	3.0	3	2	5300	2070
506	3.4	3	2	5300	2070
452	3.8	3	2	5300	2070
386	4.4	3	2	5300	2070
338	5.0	3	2	5300	2070
255	6.7	3	2	5300	2070
201	8.5	3	2	5300	2070
181	9.4	3	2	5300	2070
155	11	3	2	5300	2070
426	4.0	3	2	5300	2070
382	4.5	2	2	5300	2070
330	5.2	2	2	5300	2070
298	5.7	2	2	5300	2070
262	6.5	2	2	5300	2070
226	7.5	2	2	5300	2070
200	8.5	2	2	5300	2070
170	10	2	2	5300	2070
152	11	2	2	5300	2070
134	13	2	2	5300	2070

JRTF69/79R39,JRTF89R59 n_e=1700r/min



JRTF69R39				7250 lbf · in	
i	n_a [r/min]	Stage F69	Stage R39	M_{amax} lbf · in	F_{Ra} lbf
19199	0.09	3	3	7250	2320
17610	0.10	3	3	7250	2320
14992	0.11	3	3	7250	2320
12926	0.13	3	3	7250	2320
11480	0.15	3	3	7250	2320
10220	0.17	3	3	7250	2320
8933	0.19	3	3	7250	2320
7940	0.21	3	3	7250	2320
7096	0.24	3	3	7250	2320
6080	0.28	3	3	7250	2320
5341	0.32	3	3	7250	2320
4690	0.36	3	3	7250	2320
4091	0.42	3	3	7250	2320
3574	0.48	3	3	7250	2320
3133	0.54	3	3	7250	2320
2756	0.62	3	3	7250	2320
2439	0.70	3	3	7250	2320
3377	0.50	2	3	7250	2320
2912	0.58	2	3	7250	2320
2714	0.63	2	3	7250	2320
2372	0.72	2	3	7250	2320
2126	0.80	2	3	7250	2320
1859	0.91	2	2	7250	2320
1631	1.0	2	2	7250	2320
1437	1.2	2	3	7250	2320
1256	1.4	2	2	7250	2320
1126	1.5	2	3	7250	2320
984	1.7	2	3	7250	2320
864	2.0	2	2	7250	2320
722	2.4	2	2	7250	2320
634	2.7	2	3	7250	2320
539	3.2	2	3	7250	2320
2106	0.81	3	2	7250	2320
1884	0.90	3	2	7250	2320
1635	1.0	3	2	7250	2320
1429	1.2	3	2	7250	2320
1271	1.3	3	2	7250	2320
1102	1.5	3	2	7250	2320
970	1.8	3	2	7250	2320
858	2.0	3	2	7250	2320
755	2.3	3	2	7250	2320
641	2.7	3	2	7250	2320
572	3.0	3	2	7250	2320
509	3.3	3	2	7250	2320
437	3.9	3	2	7250	2320
384	4.4	3	2	7250	2320
338	5.0	3	2	7250	2320
305	5.6	3	2	7250	2320
257	6.6	3	2	7250	2320
231	7.4	3	2	7250	2320
205	8.3	3	2	7250	2320
175	9.7	3	2	7250	2320
500	3.4	2	2	7250	2320
454	3.7	2	2	7250	2320
392	4.3	2	2	7250	2320
333	5.1	2	2	7250	2320
297	5.7	2	2	7250	2320
261	6.5	2	2	7250	2320
238	7.1	2	2	7250	2320
200	8.5	2	2	7250	2320
176	9.7	2	2	7250	2320

JRTF79R39				13200 lbf · in	
i	n_a [r/min]	Stage F79	Stage R39	M_{amax} lbf · in	F_{Ra} lbf
19180	0.09	3	3	13200	3530
17593	0.10	3	3	13200	3530
16128	0.11	3	3	13200	3530
14978	0.11	3	3	13200	3530
13731	0.12	3	3	13200	3530
12049	0.14	3	3	13200	3530
11035	0.15	3	3	13200	3530
9683	0.18	3	3	13200	3530
8464	0.20	3	3	13200	3530
7520	0.23	3	3	13200	3530
6580	0.26	3	3	13200	3530
5808	0.29	3	3	13200	3530
5026	0.34	3	3	13200	3530
4435	0.38	3	3	13200	3530
3832	0.44	3	3	13200	3530
3381	0.50	3	3	13200	3530
2978	0.57	3	3	13200	3530
2613	0.65	3	3	13200	3530
2284	0.74	3	3	13200	3530
2029	0.84	3	3	13200	3530
4931	0.34	2	3	9820	4010
4523	0.38	2	3	9820	4010
3851	0.44	2	3	9820	4010
3320	0.51	2	3	9820	4010
3095	0.55	2	3	9820	4010
2705	0.63	2	3	9820	4010
2536	0.67	2	3	9820	4010
2238	0.76	2	3	9820	4010
2039	0.83	2	3	9820	4010
1759	0.97	2	3	9820	4010
1639	1.0	2	3	9820	4010
1433	1.2	2	3	9820	4010
1343	1.3	2	3	9820	4010
1185	1.4	2	3	9820	4010
1051	1.6	2	3	9820	4010
893	1.9	2	3	9820	4010
1728	0.98	3	2	13200	3530
1544	1.1	3	2	13200	3530
1354	1.3	3	2	13200	3530
1200	1.4	3	2	13200	3530
1053	1.6	3	2	13200	3530
910	1.9	3	2	13200	3530
810	2.1	3	2	13200	3530
710	2.4	3	2	13200	3530
615	2.8	3	2	13200	3530
538	3.2	3	2	13200	3530
480	3.5	3	2	13200	3530
413	4.1	3	2	13200	3530
367	4.6	3	2	13200	3530
323	5.3	3	2	13200	3530
280	6.1	3	2	13200	3530
247	6.9	3	2	13200	3530
221	7.7	3	2	13200	3530
199	8.5	3	2	13200	3530
815	2.1	2	2	9820	4010
706	2.4	2	2	9820	4010
660	2.6	2	2	9820	4010
571	3.0	2	2	9820	4010
485	3.5	2	2	9820	4010
433	3.9	2	2	9820	4010
370	4.6	2	2	9820	4010
346	4.9	2	2	9820	4010
292	5.8	2	2	9820	4010

JRTF89R59				26500 lbf · in	
i	n_a [r/min]	Stage F89	Stage R59	M_{amax} lbf · in	F_{Ra} lbf
23042	0.07	3	3	26500	4450
20462	0.08	3	3	26500	4450
18238	0.09	3	3	26500	4450
15877	0.11	3	3	26500	4450
14099	0.12	3	3	26500	4450
12205	0.14	3	3	26500	4450
10433	0.16	3	3	26500	4450
9381	0.18	3	3	26500	4450
8142	0.21	3	3	26500	4450
7100	0.24	3	3	26500	4450
6273	0.27	3	3	26500	4450
5510	0.31	3	3	26500	4450
4954	0.34	3	3	26500	4450
4245	0.40	3	3	26500	4450
3721	0.46	3	3	26500	4450
4952	0.34	2	3	26500	4450
4562	0.37	2	3	26500	4450
3919	0.43	2	3	26500	4450
3503	0.49	2	3	26500	4450
3196	0.53	2	3	26500	4450
2857	0.60	2	3	26500	4450
2524	0.67	2	3	26500	4450
2134	0.80	2	3	26500	4450
1913	0.89	2	3	26500	4450
1717	0.99	2	3	26500	4450
1476	1.2	2	3	26500	4450
1278	1.3	2	3	26500	4450
1142	1.5	2	3	26500	4450
988	1.7	2	3	26500	4450
883	1.9	2	3	26500	4450
748	2.3	2	3	26500	4450
3244	0.52	3	2	26500	4450
2881	0.59	3	2	26500	4450
2576	0.66	3	2	26500	4450
2199	0.77	3	2	26500	4450
1930	0.88	3	2	26500	4450
1709	0.99	3	2	26500	4450
1493	1.1	3	2	26500	4450
1300	1.3	3	2	26500	4450
1148	1.5	3	2	26500	4450
1010	1.7	3	2	26500	4450
887	1.9	3	2	26500	4450
780	2.2	3	2	26500	4450
674	2.5	3	2	26500	4450
609	2.8	3	2	26500	4450
515	3.3	3	2	26500	4450
452	3.8	3	2	26500	4450
345	4.9	3	2	26500	4450
300	5.7	3	2	26500	4450
249	6.8	3	2	26500	4450
662	2.6	2	2	26500	4450
592	2.9	2	2	26500	4450
519	3.3	2	2	26500	4450
468	3.6	2	2	26500	4450
398	4.3	2	2	26500	4450
350	4.9	2	2	26500	4450
315	5.4	2	2	26500	4450
281	6.0	2	2	26500	4450
240	7.1	2	2	26500	4450
211	8.1	2	2	26500	4450
193	8.8	2	2	26500	4450

JRTF99R59,JRTF109R79,JRTF129R79 n_e=1700r/min

JRTF99R59				38000 lbf · in	
i	n_a [r/min]	Stage F99	Stage R59	M_{amax} lbf · in	F_{Ra} lbf
29211	0.06	3	3	38000	6720
26911	0.06	3	3	38000	6720
23814	0.07	3	3	38000	6720
20813	0.08	3	3	38000	6720
18119	0.09	3	3	38000	6720
15472	0.11	3	3	38000	6720
14022	0.12	3	3	38000	6720
12324	0.14	3	3	38000	6720
10838	0.16	3	3	38000	6720
9576	0.18	3	3	38000	6720
8318	0.20	3	3	38000	6720
7328	0.23	3	3	38000	6720
6469	0.26	3	3	38000	6720
5615	0.30	3	3	38000	6720
4961	0.34	3	3	38000	6720
4333	0.39	3	3	38000	6720
6338	0.27	2	3	38000	6720
5680	0.30	2	3	38000	6720
5016	0.34	2	3	38000	6720
4367	0.39	2	3	38000	6720
3914	0.43	2	3	38000	6720
3357	0.51	2	3	38000	6720
3099	0.56	2	3	38000	6720
2448	0.69	2	3	38000	6720
2199	0.77	2	3	38000	6720
1971	0.86	2	3	38000	6720
1741	0.98	2	3	38000	6720
1468	1.2	2	3	38000	6720
1316	1.3	2	3	38000	6720
1189	1.4	2	3	38000	6720
1023	1.7	2	3	38000	6720
3906	0.44	3	2	38000	6720
3352	0.51	3	2	38000	6720
2907	0.58	3	2	38000	6720
2553	0.67	3	2	38000	6720
2245	0.76	3	2	38000	6720
1970	0.86	3	2	38000	6720
1722	0.99	3	2	38000	6720
1527	1.1	3	2	38000	6720
1327	1.3	3	2	38000	6720
1171	1.5	3	2	38000	6720
1022	1.7	3	2	38000	6720
898	1.9	3	2	38000	6720
784	2.2	3	2	38000	6720
690	2.5	3	2	38000	6720
605	2.8	3	2	38000	6720
529	3.2	3	2	38000	6720
467	3.6	3	2	38000	6720
406	4.2	3	2	38000	6720
363	4.7	3	2	38000	6720
285	6.0	3	2	38000	6720
245	6.9	3	2	38000	6720
208	8.2	3	2	38000	6720
195	8.7	3	2	38000	6720
892	1.9	2	2	38000	6720
760	2.2	2	2	38000	6720
667	2.5	2	2	38000	6720
569	3.0	2	2	38000	6720
510	3.3	2	2	38000	6720
473	3.6	2	2	38000	6720
403	4.2	2	2	38000	6720
361	4.7	2	2	38000	6720
317	5.4	2	2	38000	6720
275	6.2	2	2	38000	6720
242	7.0	2	2	38000	6720

JRTF109R79				69300 lbf · in	
i	n_a [r/min]	Stage F109	Stage R79	M_{amax} lbf · in	F_{Ra} lbf
25375	0.07	3	3	67900	11200
21652	0.08	3	3	67900	11200
18933	0.09	3	3	67900	11200
16888	0.10	3	3	67900	11200
14767	0.12	3	3	67900	11200
11348	0.15	3	3	67900	11200
10039	0.17	3	3	67900	11200
8548	0.20	3	3	67900	11200
7674	0.22	3	3	67900	11200
6767	0.25	3	3	67900	11200
5954	0.29	3	3	67900	11200
5223	0.33	3	3	67900	11200
4567	0.37	3	3	67900	11200
3948	0.43	3	3	67900	11200
3521	0.48	3	3	67900	11200
5383	0.32	2	3	69300	11100
4593	0.37	2	3	69300	11100
4016	0.42	2	3	69300	11100
3815	0.45	2	3	69300	11100
3347	0.51	2	3	69300	11100
2839	0.60	2	3	69300	11100
2563	0.66	2	3	69300	11100
2255	0.75	2	3	69300	11100
2129	0.80	2	3	69300	11100
1813	0.94	2	3	69300	11100
1590	1.1	2	3	69300	11100
1436	1.2	2	3	69300	11100
1263	1.3	2	3	69300	11100
1193	1.4	2	3	69300	11100
1015	1.7	2	3	69300	11100
923	1.8	2	3	69300	11100
800	2.1	2	3	69300	11100
696	2.4	2	3	69300	11100
3037	0.56	3	2	67900	11200
2756	0.62	3	2	67900	11200
2369	0.72	3	2	67900	11200
2068	0.82	3	2	67900	11200
1826	0.93	3	2	67900	11200
1597	1.1	3	2	67900	11200
1401	1.2	3	2	67900	11200
1243	1.4	3	2	67900	11200
1087	1.6	3	2	67900	11200
950	1.8	3	2	67900	11200
834	2.0	3	2	67900	11200
736	2.3	3	2	67900	11200
640	2.7	3	2	67900	11200
560	3.0	3	2	67900	11200
489	3.5	3	2	67900	11200
436	3.9	3	2	67900	11200
370	4.6	3	2	67900	11200
333	5.1	3	2	67900	11200
291	5.8	3	2	67900	11200
255	6.7	3	2	67900	11200
225	7.6	3	2	67900	11200
190	8.9	3	2	67900	11200
644	2.6	2	2	67900	11200
591	2.9	2	2	67900	11200
518	3.3	2	2	67900	11200
491	3.5	2	2	67900	11200
430	4.0	2	2	67900	11200
387	4.4	2	2	67900	11200
340	5.0	2	2	67900	11200
300	5.7	2	2	67900	11200
266	6.4	2	2	67900	11200

JRTF129R79				106100 lbf · in	
i	n_a [r/min]	Stage F129	Stage R79	M_{amax} lbf · in	F_{Ra} lbf
24478	0.07	3	3	106100	20200
22323	0.08	3	3	106100	20200
19048	0.09	3	3	106100	20200
16656	0.10	3	3	106100	20200
14722	0.12	3	3	106100	20200
12912	0.13	3	3	106100	20200
11656	0.15	3	3	106100	20200
10191	0.17	3	3	106100	20200
8831	0.19	3	3	106100	20200
7643	0.22	3	3	106100	20200
6715	0.25	3	3	106100	20200
5925	0.29	3	3	106100	20200
5153	0.33	3	3	106100	20200
4533	0.38	3	3	106100	20200
3926	0.43	3	3	106100	20200
3454	0.49	3	3	106100	20200
3031	0.56	3	3	106100	20200
2672	0.64	3	2	106100	20200
2357	0.72	3	2	106100	20200
2038	0.83	3	2	106100	20200
1784	0.95	3	2	106100	20200
1606	1.1	3	2	106100	20200
1390	1.2	3	2	106100	20200
1220	1.4	3	2	106100	20200
1077	1.6	3	2	106100	20200
930	1.8	3	2	106100	20200
820	2.1	3	2	106100	20200
727	2.3	3	2	106100	20200
648	2.6	3	2	106100	20200
549	3.1	3	2	106100	20200
495	3.4	3	2	106100	20200
428	4.0	3	2	106100	20200
376	4.5	3	2	106100	20200

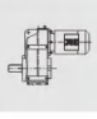

JRTF129R89,JRTF159R99 n_e=1700r/min



JRTF129R89				106100 lbf · in	
i	n_a [r/min]	Stage F129	Stage R89	M_{amax} lbf · in	F_{Ra} lbf
483	3.5	3	2	106100	20200
418	4.1	3	2	106100	20200
374	4.5	3	2	106100	20200
312	5.4	3	2	106100	20200
293	5.8	3	2	106100	20200
259	6.6	3	2	106100	20200
223	7.6	3	2	106100	20200
198	8.6	3	2	106100	20200
166	10	3	2	106100	20200

JRTF159R99				159200 lbf · in	
i	n_a [r/min]	Stage F159	Stage R99	M_{amax} lbf · in	F_{Ra} lbf
31434	0.05	3	3	159200	22500
26173	0.06	3	3	159200	22500
23464	0.07	3	3	159200	22500
20212	0.08	3	3	159200	22500
17984	0.09	3	3	159200	22500
16358	0.10	3	3	159200	22500
13751	0.12	3	3	159200	22500
12235	0.14	3	3	159200	22500
10033	0.17	3	3	159200	22500
9021	0.19	3	3	159200	22500
8026	0.21	3	3	159200	22500
7075	0.24	3	3	159200	22500
6295	0.27	3	3	159200	22500
5404	0.31	3	3	159200	22500
4831	0.35	3	3	159200	22500
4130	0.41	3	3	159200	22500
3607	0.47	3	3	159200	22500
3210	0.53	3	3	159200	22500
2780	0.61	3	3	159200	22500
1441	1.2	3	3	159200	22500
2427	0.70	3	2	159200	22500
2185	0.78	3	2	159200	22500
1944	0.87	3	2	159200	22500
1674	1.0	3	2	159200	22500
1308	1.3	3	2	159200	22500
1169	1.5	3	2	159200	22500
953	1.8	3	2	159200	22500
845	2.0	3	2	159200	22500
764	2.2	3	2	159200	22500
680	2.5	3	2	159200	22500
576	3.0	3	3	159200	22500
503	3.4	3	2	159200	22500
446	3.8	3	2	159200	22500
353	4.8	3	2	159200	22500
302	5.6	3	2	159200	22500
273	6.2	3	2	159200	22500
232	7.3	3	2	159200	22500
202	8.4	3	2	159200	22500
197	8.6	3	2	159200	22500

5. Selection table

Selection table for geared motors

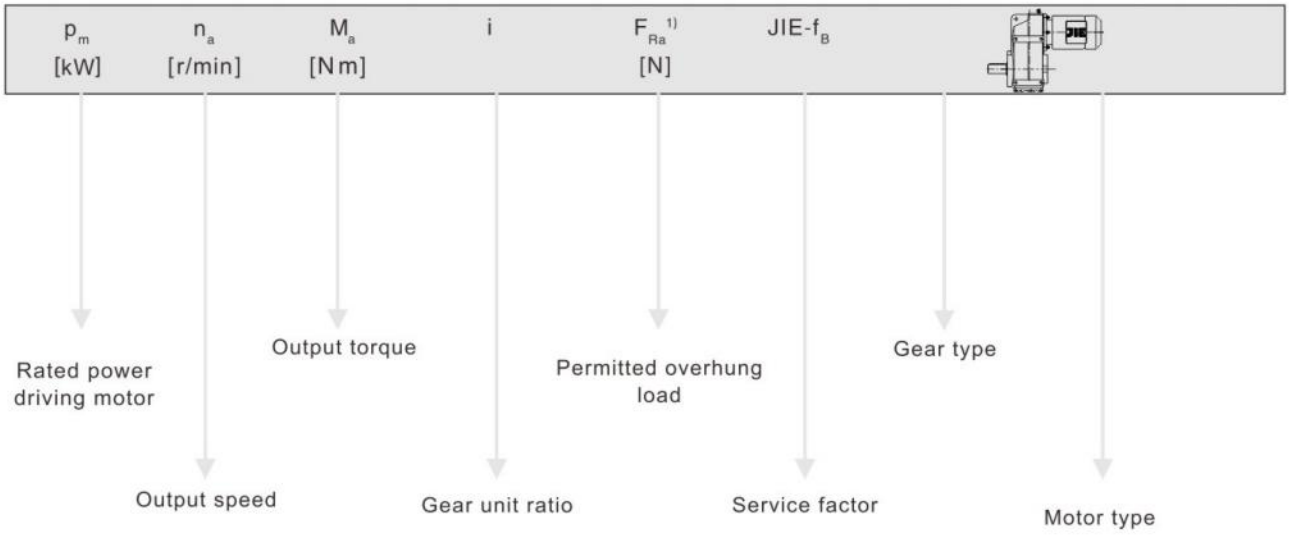

For particularly low output speeds

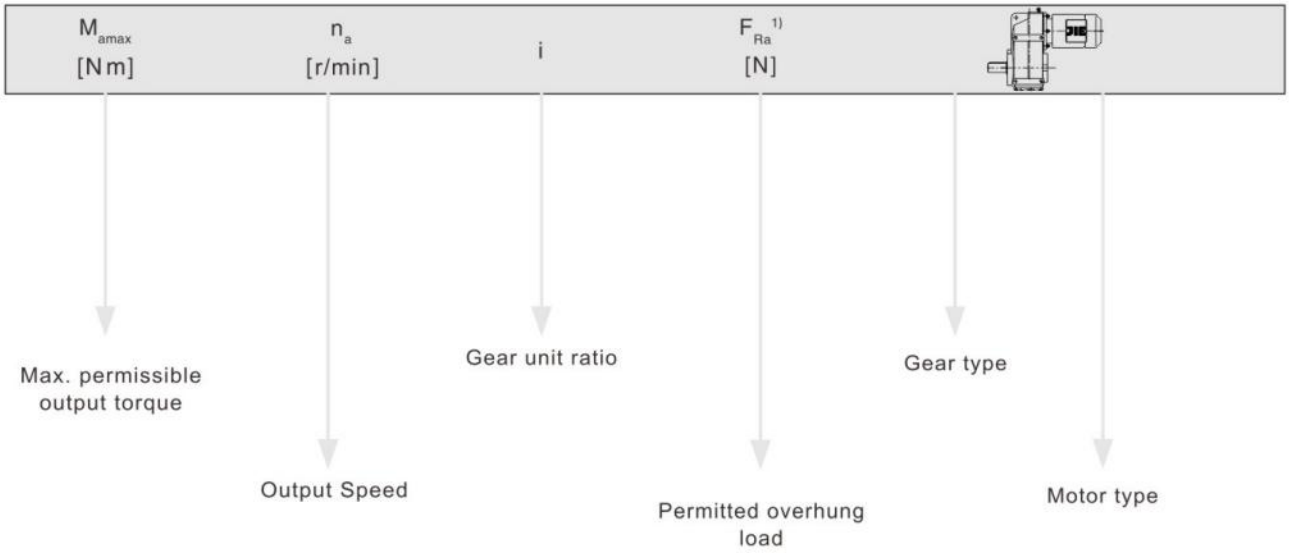

Legend

1)Overhung load specified for foot-mounted gear unit with solid shaft

Notice:

In drives for particularly low output speeds(multi-stage geared motors),the motor power must be limited according to the maximum permitted output torque of the gear unit.

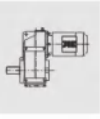

Output speed n_a [r/min]	Output torque T_a lbf · in	Ratio i	Permitted overhung load F_{Ra} [1] lbf	Service factor f_B	Model
0.16HP					
0.08	95100	22323	20200	1.10	
0.09	81200	19048	20200	1.30	JRTFA129R79DN63S4
0.10	71000	16656	20200	1.50	JRTFAF129R79DN63S4
0.11	62700	14722	20200	1.70	JRTF129R79DN63S4
0.13	53800	12912	20200	1.95	JRTFF129R79DN63S4
0.14	47000	11656	20200	2.3	
0.16	42500	10191	20200	2.5	
0.11	62900	14767	11500	1.10	
0.15	48300	11348	12400	1.40	
0.17	37500	10039	13000	1.80	JRTFA109R79DN63S4
0.20	30000	8548	13400	2.3	JRTFAF109R79DN63S4
0.22	32000	7674	13300	2.1	JRTF109R79DN63S4
0.25	27300	6767	13500	2.5	JRTFF109R79DN63S4
0.28	22800	5954	13700	3.0	
0.32	19500	5223	13900	3.5	
0.37	19400	4567	13900	3.5	
0.48	14200	3521	14100	4.8	
0.26	28200	6469	7380	1.35	JRTFA99R59DN63S4
0.30	26500	5615	7480	1.45	JRTFAF99R59DN63S4
0.34	22900	4961	7690	1.65	JRTF99R59DN63S4
0.39	20000	4333	7840	1.90	JRTFF99R59DN63S4
0.43	18700	3906	7900	2.0	JRTFA99R59DN63S4
0.50	16200	3352	8020	2.3	JRTFAF99R59DN63S4
0.58	13100	2907	8150	2.9	JRTF99R59DN63S4
0.66	12200	2553	8190	3.1	JRTFF99R59DN63S4
					JRTFA89R59DN63S4
0.40	19000	4245	5840	1.40	JRTFAF89R59DN63S4
0.45	14700	3721	6160	1.80	JRTF89R59DN63S4
					JRTFF89R59DN63S4
0.52	15700	3244	6090	1.70	
0.58	13900	2881	6210	1.90	
0.65	12400	2576	6300	2.1	
0.76	10500	2199	6420	2.5	JRTFA89R59DN63S4
0.87	9050	1930	6500	2.9	JRTFAF89R59DN63S4
0.98	8190	1709	6540	3.2	JRTF89R59DN63S4
1.1	7230	1493	6590	3.7	JRTFF89R59DN63S4
1.3	5530	1300	6670	4.8	
1.5	5080	1148	6690	5.2	
					JRTFA79R39DN63S4
0.74	10900	2284	3870	1.20	JRTFAF79R39DN63S4
0.83	9680	2029	4030	1.35	JRTF79R39DN63S4
					JRTFF79R39DN63S4
0.97	8200	1728	4170	1.60	
1.1	7650	1544	4220	1.75	
1.2	6710	1354	4290	2.0	JRTFA79R39DN63S4
1.4	5940	1200	4340	2.2	JRTFAF79R39DN63S4
1.6	5210	1053	4390	2.5	JRTF79R39DN63S4
1.9	4430	910	4430	3.0	JRTFF79R39DN63S4
2.1	3610	810	4460	3.7	
2.4	3170	710	4470	4.2	
1.2	6650	1429	2440	1.10	
1.3	6030	1271	2560	1.20	
1.5	4980	1102	2720	1.45	
1.7	4380	970	2790	1.65	JRTFA69R39DN63S4
2.0	3830	858	2850	1.90	JRTFAF69R39DN63S4
2.2	3370	755	2890	2.1	JRTF69R39DN63S4
2.6	2860	641	2920	2.5	JRTFF69R39DN63S4
2.9	2710	572	2920	2.7	
3.3	2270	509	2920	3.2	
3.9	1970	437	2920	3.7	

Output speed n_a [r/min]	Output torque T_a lbf · in	Ratio i	Permitted overhung load F_{Ra} [1] lbf	Service factor f_B	Model
0.16HP					
2.0	4320	851	2250	1.25	
2.3	3680	738	2350	1.45	JRTFA59R39DN63S4
2.6	3200	646	2430	1.65	JRTFAF59R39DN63S4
3.0	2720	558	2490	1.95	JRTF59R39DN63S4
3.3	2400	506	2540	2.2	JRTFF59R39DN63S4
3.7	2040	452	2580	2.6	
4.0	2180	426	2560	2.4	JRTFA59R39DN63S4
4.4	1910	382	2580	2.8	JRTFAF59R39DN63S4
5.1	1620	330	2580	3.3	JRTF59R39DN63S4
5.6	1470	298	2580	3.6	JRTFF59R39DN63S4
6.4	1290	262	2580	4.1	
3.1	2720	543	1570	1.30	JRTFA49R19DN63S4
3.5	2320	475	1650	1.50	JRTFAF49R19DN63S4
4.0	2020	419	1710	1.75	JRTF49R19DN63S4 JRTFF49R19DN63S4
3.2	2680	524	1580	1.30	
3.4	2480	489	1620	1.45	JRTFA49R19DN63S4
3.9	2130	427	1690	1.65	JRTFAF49R19DN63S4
4.4	1880	381	1730	1.90	JRTF49R19DN63S4
5.0	1650	334	1760	2.1	JRTFF49R19DN63S4
5.7	1430	295	1790	2.5	
6.6	1180	253	1810	3.0	
5.2	1520	322	1040	1.15	JRTFA39R19DN63S4
6.1	1330	278	1090	1.30	JRTFAF39R19DN63S4
6.9	1120	242	1140	1.60	JRTF39R19DN63S4
7.6	1090	221	1150	1.60	JRTFF39R19DN63S4
5.2	1650	326	1000	1.05	
5.9	1420	285	1070	1.25	JRTFA39R19DN63S4
6.7	1240	250	1120	1.45	JRTFAF39R19DN63S4
7.7	1090	219	1150	1.60	JRTF39R19DN63S4
9.0	920	186	1180	1.90	JRTFF39R19DN63S4
10	820	167	1190	2.1	
4.8	2090	228.99	2920	3.5	
5.6	1790	195.39	2920	4.0	JRTFA69DN63M6
6.4	1560	170.85	2920	4.6	JRTFAF69DN63M6
6.8	1480	163.31	2920	4.9	JRTF69DN63M6
7.7	1300	142.40	2920	5.6	JRTFF69DN63M6
5.5	1820	199.70	2580	2.9	
6.0	1680	183.60	2580	3.2	JRTFA59DN63M6
7.0	1430	157.09	2580	3.7	JRTFAF59DN63M6
8.1	1240	136.16	2580	4.2	JRTF59DN63M6
8.6	1160	127.27	2580	4.5	JRTFF59DN63M6
8.4	1190	199.70	2580	4.4	JRTFA59DN63S4
9.2	1100	183.60	2580	4.8	JRTFAF59DN63S4
11	940	157.09	2580	5.6	JRTF59DN63S4
12	810	136.16	2580	6.5	JRTFF59DN63S4
5.8	1740	190.76	1750	2.0	
6.3	1600	175.38	1770	2.2	
7.3	1370	150.06	1790	2.6	JRTFA49DN63M6
8.5	1190	130.07	1810	3.0	JRTFAF49DN63M6
9.1	1110	121.57	1820	3.2	JRTF49DN63M6
10	960	105.09	1830	3.7	JRTFF49DN63M6
12	810	89.29	1840	4.3	
14	730	79.72	1840	4.8	
8.8	1140	190.76	1820	3.1	JRTFA49DN63S4
9.6	1050	175.38	1820	3.4	JRTFAF49DN63S4
11	900	150.06	1830	3.9	JRTF49DN63S4
13	780	130.07	1840	4.5	JRTFF49DN63S4
8.6	1170	128.51	1130	1.50	
9.3	1080	117.88	1150	1.65	JRTFA39DN63M6
11	910	100.35	1180	1.90	JRTFAF39DN63M6
13	790	86.53	1190	2.2	JRTF39DN63M6
14	735	80.65	1200	2.4	JRTFF39DN63M6

Output speed n_a [r/min]	Output torque T_a lbf · in	Ratio i	Permitted overhung load F_{Ra} [1)] lbf	Service factor f_B	Model
0.16HP					
13	770	128.51	1200	2.3	
14	705	117.88	1200	2.5	JRTFA39DN63S4
17	600	100.36	1220	2.9	JRTFAF39DN63S4
19	515	86.53	1220	3.4	JRTF39DN63S4
21	480	80.65	1230	3.7	JRTFF39DN63S4
0.25HP					
0.13	93100	12912	20200	1.15	
0.15	82500	11656	20200	1.30	JRTFA129R79DN63M4
0.17	73500	10191	20200	1.45	JRTFAF129R79DN63M4
0.19	59800	8831	20200	1.75	JRTF129R79DN63M4
0.22	51800	7643	20200	2.0	JRTFF129R79DN63M4
0.25	49000	6715	20200	2.2	
0.20	55900	8548	12000	1.20	
0.22	55300	7674	12000	1.25	
0.25	47900	6767	12400	1.40	JRTFA109R79DN63M4
0.29	40900	5954	12800	1.65	JRTFAF109R79DN63M4
0.33	35400	5223	13100	1.90	JRTF109R79DN63M4
0.37	33300	4567	13200	2.0	JRTFF109R79DN63M4
0.48	24900	3521	13600	2.7	
0.56	22100	3037	13800	3.1	JRTFA109R79DN63M4
0.62	20100	2756	13900	3.4	JRTFAF109R79DN63M4
0.72	17300	2369	14000	3.9	JRTF109R79DN63M4
0.82	15100	2068	14100	4.5	JRTFF109R79DN63M4
0.39	33200	4333	7060	1.15	JRTFA99R59DN63M4 JRTFAF99R59DN63M4 JRTF99R59DN63M4 JRTFF99R59DN63M4
0.44	30700	3906	7230	1.25	
0.51	26500	3352	7480	1.45	
0.58	22100	2907	7730	1.70	
0.67	20100	2553	7840	1.90	JRTFA99R59DN63M4
0.76	17600	2245	7950	2.1	JRTFAF99R59DN63M4
0.86	15300	1970	8060	2.5	JRTF99R59DN63M4
0.99	13600	1722	8130	2.8	JRTFF99R59DN63M4
1.1	12100	1527	8200	3.1	
1.3	9730	1327	8290	3.9	
1.4	9270	1171	8310	4.1	
0.66	20400	2576	5720	1.30	
0.77	17300	2199	5970	1.55	
0.88	14900	1930	6140	1.75	
0.99	13400	1709	6240	1.95	JRTFA89R59DN63M4
1.1	11800	1493	6340	2.2	JRTFAF89R59DN63M4
1.3	9530	1300	6470	2.8	JRTF89R59DN63M4
1.5	8610	1148	6520	3.1	JRTFF89R59DN63M4
1.7	7410	1010	6580	3.6	
1.9	6650	887	6620	4.0	
2.2	5720	780	6660	4.6	
1.1	12400	1544	3670	1.05	
1.3	10800	1354	3890	1.20	
1.4	9630	1200	4030	1.40	JRTFA79R39DN63M4
1.6	8450	1053	4150	1.55	JRTFAF79R39DN63M4
1.9	7230	910	4250	1.85	JRTF79R39DN63M4
2.1	6100	810	4330	2.2	JRTFF79R39DN63M4
2.4	5350	710	4380	2.5	
2.8	4800	615	4410	2.8	
2.0	6470	858	2480	1.10	
2.2	5690	755	2610	1.25	JRTFA69R39DN63M4
2.6	4830	641	2740	1.50	JRTFAF69R39DN63M4
3.0	4470	572	2780	1.60	JRTF69R39DN63M4
3.3	3830	509	2850	1.90	JRTFF69R39DN63M4
3.9	3310	437	2900	2.2	
4.4	2990	384	2920	2.4	

Output speed n_a [r/min]	Output torque T_a lbf · in	Ratio i	Permitted overhung load F_{Ra} [1)] lbf	Service factor f_B	Model
0.25HP					
3.4	4020	500	2830	1.80	
3.8	3680	454	2870	1.95	
4.3	3150	392	2910	2.3	JRTFA69R39DN63M4
5.1	2630	333	2920	2.8	JRTFAF69R39DN63M4
5.7	2320	297	2920	3.1	JRTF69R39DN63M4
6.5	2040	261	2920	3.5	JRTFF69R39DN63M4
7.2	1810	238	2920	4.0	
8.5	1500	200	2920	4.8	
3.0	4430	558	2230	1.20	JRTFA59R39DN63M4
3.4	3960	506	2310	1.35	JRTFAF59R39DN63M4
3.8	3430	452	2390	1.55	JRTF59R39DN63M4
4.4	2930	386	2460	1.80	JRTFF59R39DN63M4
5.0	2540	338	2520	2.1	
4.0	3510	426	2380	1.50	
4.5	3100	382	2440	1.70	JRTFA59R39DN63M4
5.2	2650	330	2500	2.0	JRTFAF59R39DN63M4
5.7	2390	298	2540	2.2	JRTF59R39DN63M4
6.5	2110	262	2570	2.5	JRTFF59R39DN63M4
7.5	1770	226	2580	3.0	
8.5	1530	200	2580	3.5	
4.6	2840	370	1540	1.25	JRTFA49R19DN63M4
5.3	2630	324	1590	1.35	JRTFAF49R19DN63M4
5.9	2270	288	1670	1.55	JRTF49R19DN63M4
6.8	1910	249	1720	1.85	JRTFF49R19DN63M4
5.1	2690	334	1580	1.30	
5.8	2350	295	1650	1.50	JRTFA49R19DN63M4
6.7	1970	253	1720	1.80	JRTFAF49R19DN63M4
7.8	1770	217	1740	2.0	JRTF49R19DN63M4
9.0	1540	190	1780	2.3	JRTFF49R19DN63M4
9.6	1430	178	1790	2.5	
9.1	1500	186	1050	1.20	JRTFA39R19DN63M4
10	1340	167	1090	1.30	JRTFAF39R19DN63M4
12	1190	145	1130	1.50	JRTF39R19DN63M4
13	1050	129	1150	1.65	JRTFF39R19DN63M4
3.8	4150	281.71	4440	3.2	JRTFA79DN71S6
4.1	3870	262.93	4450	3.4	JRTFAF79DN71S6
4.7	3320	225.79	4470	4.0	JRTF79DN71S6 JRTFF79DN71S6
7.4	2120	228.99	2920	3.4	JRTFA69DN63M4
8.7	1810	195.39	2920	4.0	JRTFAF69DN63M4
9.9	1580	170.85	2920	4.6	JRTF69DN63M4 JRTFF69DN63M4
4.7	3370	228.89	2890	2.1	JRTFA69DN71S6
5.5	2870	195.39	2920	2.5	JRTFAF69DN71S6
6.3	2510	170.85	2920	2.9	JRTF69DN71S6 JRTFF69DN71S6
8.5	1850	199.70	2580	2.9	
9.3	1700	183.60	2580	3.1	JRTFA59DN63M4
11	1450	157.09	2580	3.6	JRTFAF59DN63M4
12	1260	136.16	2580	4.2	JRTF59DN63M4
13	1180	127.27	2580	4.5	JRTFF59DN63M4
5.4	2940	199.70	2460	1.80	
5.8	2700	183.60	2500	1.95	
6.8	2310	157.09	2550	2.3	JRTFA59DN71S6
7.9	2000	136.16	2580	2.6	JRTFAF59DN71S6
8.4	1870	127.27	2580	2.8	JRTF59DN71S6
9.7	1620	110.01	2580	3.3	JRTFF59DN71S6
8.9	1760	190.76	1750	2.0	
9.7	1620	175.38	1760	2.2	JRTFA49DN63M4
11	1390	150.06	1790	2.5	JRTFAF49DN63M4
13	1200	130.07	1810	2.9	JRTF49DN63M4
14	1120	121.57	1820	3.1	JRTFF49DN63M4
5.6	2810	190.76	1550	1.25	
6.1	2580	175.38	1600	1.35	JRTFA49DN71S6
7.1	2210	150.06	1680	1.60	JRTFAF49DN71S6
8.2	1910	130.07	1720	1.85	JRTF49DN71S6
8.8	1790	121.57	1740	2.0	JRTFF49DN71S6

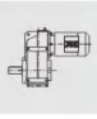



Output speed n_a [r/min]	Output torque T_a lbf · in	Ratio i	Permitted overhung load F_{Ra} [1] lbf	Service factor f_B	Model
0.25HP					
13	1190	128.51	1130	1.50	JRTFA39DN63M4 JRTFAF39DN63M4 JRTF39DN63M4 JRTFF39DN63M4
14	1090	117.88	1150	1.60	
17	930	100.36	1170	1.90	
20	800	86.53	1190	2.2	
21	745	80.65	1200	2.4	
24	650	70.50	1210	2.7	
26	610	66.09	1210	2.9	
29	540	58.32	1220	3.3	
9.1	1730	117.88	980	1.00	JRTFA39DN71S6 JRTFAF39DN71S6 JRTF39DN71S6 JRTFF39DN71S6
11	1470	100.36	1060	1.20	
12	1270	86.53	1110	1.40	
13	1180	80.65	1130	1.50	
15	1030	70.50	1160	1.70	
0.33HP					
0.19	84200	8831	20200	1.25	JRTFA129R79DN71S4 JRTFAF129R79DN71S4 JRTF129R79DN71S4 JRTFF129R79DN71S4
0.22	72900	7643	20200	1.45	
0.25	67600	6715	20200	1.55	
0.29	59600	5925	20200	1.80	
0.33	50600	5153	20200	2.1	
0.37	43600	4533	20200	2.4	
0.29	57300	5954	11900	1.20	JRTFA109R79DN71S4 JRTFAF109R79DN71S4 JRTF109R79DN71S4 JRTFF109R79DN71S4
0.33	49800	5223	12300	1.35	
0.37	45900	4567	12600	1.50	
0.48	34600	3521	13200	1.95	
0.56	30600	3037	13400	2.2	JRTFA109R79DN71S4 JRTFAF109R79DN71S4 JRTF109R79DN71S4 JRTFF109R79DN71S4
0.62	27800	2756	13500	2.4	
0.72	23900	2369	13700	2.8	
0.82	20800	2068	13800	3.2	
1.1	15900	1597	14100	4.3	
1.2	13600	1401	14100	5.0	
0.58	30200	2907	7260	1.25	JRTFA99R59DN71S4 JRTFAF99R59DN71S4 JRTF99R59DN71S4 JRTFF99R59DN71S4
0.67	27200	2553	7440	1.40	
0.76	23900	2245	7630	1.60	
0.86	20800	1970	7800	1.85	
0.99	18400	1722	7920	2.1	
1.1	16300	1527	8010	2.3	
1.3	13400	1327	8140	2.8	
1.4	12500	1171	8180	3.0	
1.7	10900	1022	8240	3.5	
0.88	20300	1930	5730	1.30	JRTFA89R59DN71S4 JRTFAF89R59DN71S4 JRTF89R59DN71S4 JRTFF89R59DN71S4
0.99	18200	1709	5900	1.45	
1.1	16000	1493	6070	1.65	
1.3	13100	1300	6260	2.0	
1.5	11800	1148	6340	2.2	
1.7	10200	1010	6430	2.6	
1.9	9130	887	6500	2.9	
2.2	7900	780	6560	3.4	
2.5	6650	674	6620	4.0	
1.6	11300	1053	3820	1.15	JRTFA79R39DN71S4 JRTFAF79R39DN71S4 JRTF79R39DN71S4 JRTFF79R39DN71S4
1.9	9770	910	4020	1.35	
2.1	8370	810	4160	1.60	
2.4	7340	710	4250	1.80	
2.8	6520	615	4310	2.0	
3.2	5710	538	4360	2.3	
3.5	5050	480	4390	2.6	
4.1	4260	413	4430	3.1	
3.0	6070	572	2550	1.20	JRTFA69R39DN71S4 JRTFAF69R39DN71S4 JRTF69R39DN71S4 JRTFF69R39DN71S4
3.3	5250	509	2680	1.40	
3.9	4530	437	2700	1.60	

Output speed n_a [r/min]	Output torque T_a lbf · in	Ratio i	Permitted overhung load F_{Ra} [1] lbf	Service factor f_B	Model
0.33HP					
3.4	5440	500	2650	1.35	JRTFA69R39DN71S4 JRTFAF69R39DN71S4 JRTF69R39DN71S4 JRTFF69R39DN71S4
3.8	4970	454	2720	1.45	
4.3	4260	392	2810	1.70	
5.1	3570	333	2880	2.0	
5.7	3160	297	2910	2.3	
6.5	2780	261	2920	2.6	
7.2	2480	238	2920	2.9	
4.4	4010	386	2300	1.30	JRTFA59R39DN71S4 JRTFAF59R39DN71S4 JRTF59R39DN71S4 JRTFF59R39DN71S4
5.0	3490	338	2380	1.50	
6.7	2640	255	2500	2.0	
4.5	4180	382	2270	1.25	JRTFA59R39DN71S4 JRTFAF59R39DN71S4 JRTF59R39DN71S4 JRTFF59R39DN71S4
5.2	3590	330	2370	1.50	
5.7	3240	298	2420	1.65	
6.5	2850	262	2480	1.85	
7.5	2410	226	2540	2.2	
8.5	2090	200	2580	2.5	
10	1780	170	2580	3.0	
6.8	2610	249	1600	1.35	JRTFA49R19DN71S4 JRTFAF49R19DN71S4 JRTF49R19DN71S4 JRTFF49R19DN71S4
7.8	2330	218	1650	1.50	
8.8	2050	193	1700	1.70	
9.8	1860	175	1730	1.90	
6.7	2680	253	1580	1.30	JRTFA49R19DN71S4 JRTFAF49R19DN71S4 JRTF49R19DN71S4 JRTFF49R19DN71S4
7.8	2390	217	1640	1.50	
9.0	2070	190	1700	1.70	
9.6	1840	178	1720	1.80	
11	1610	149	1770	2.2	
13	1410	131	1790	2.5	
12	1600	145	1020	1.10	JRTFA39R19DN71S4 JRTFAF39R19DN71S4 JRTF39R19DN71S4 JRTFF39R19DN71S4
13	1420	129	1070	1.25	
14	1290	118	1100	1.35	
17	1070	98	1150	1.65	
20	930	87	1170	1.90	
3.9	5320	281.71	4380	2.5	JRTFA79DN71M6 JRTFAF79DN71M6 JRTF79DN71M6 JRTFF79DN71M6
4.2	4970	262.93	4400	2.7	
4.9	4270	225.79	4430	3.1	
5.5	3750	198.31	4450	3.5	
5.8	3560	188.40	4460	3.7	
4.8	4330	228.99	2800	1.65	JRTFA69DN71M6 JRTFAF69DN71M6 JRTF69DN71M6 JRTFF69DN71M6
5.6	3690	195.39	2860	1.95	
6.4	3230	170.85	2910	2.2	
6.8	3070	162.31	2920	2.4	
7.7	2690	142.40	2920	2.7	
7.4	2800	228.99	2920	2.6	JRTFA69DN71S4 JRTFAF69DN71S4 JRTF69DN71S4 JRTFF69DN71S4
8.7	2390	195.39	2920	3.0	
9.9	2090	170.85	2920	3.5	
10	1980	162.31	2920	3.6	
12	1740	142.40	2920	4.2	
5.5	3770	199.70	2340	1.40	JRTFA59DN71M6 JRTFAF59DN71M6 JRTF59DN71M6 JRTFF59DN71M6
6.0	3470	183.60	2380	1.55	
7.0	2970	157.09	2460	1.80	
8.1	2570	136.16	2510	2.1	
8.6	2400	127.27	2540	2.2	
10	2080	110.01	2580	2.5	

Output speed n_a [r/min]	Output torque T_a lbf · in	Ratio i	Permitted overhung load F_{Ra} [1] lbf	Service factor f_B	Model
0.33HP					
8.5	2440	199.70	2530	2.2	
9.3	2240	183.60	2560	2.4	
11	1920	157.09	2580	2.8	JRTFA59DN71S4
12	1660	136.16	2580	3.2	JRTFAF59DN71S4
13	1550	127.27	2580	3.4	JRTF59DN71S4
15	1340	110.01	2580	3.9	JRTFF59DN71S4
7.3	2830	150.06	1540	1.25	
8.5	2460	130.07	1630	1.45	JRTFA49DN71M6
9.1	2290	121.57	1660	1.55	JRTFAF49DN71M6
10	1980	105.09	1710	1.80	JRTF49DN71M6
8.9	2330	190.76	1650	1.50	JRTFF49DN71M6
9.7	2140	175.38	1690	1.65	
11	1830	150.06	1740	1.95	JRTFA49DN71S4
13	1590	130.07	1770	2.2	JRTFAF49DN71S4
14	1480	121.57	1780	2.4	JRTF49DN71S4
16	1280	105.09	1800	2.8	JRTFF49DN71S4
19	1090	89.29	1820	3.2	
13	1570	128.51	1030	1.10	
14	1440	117.88	1070	1.25	
17	1220	100.36	1120	1.45	
20	1050	86.53	1150	1.65	
21	980	80.65	1160	1.80	
24	860	70.50	1180	2.0	JRTFA39DN71S4
26	800	66.09	1190	2.2	JRTFAF39DN71S4
29	710	58.32	1200	2.5	JRTF39DN71S4
31	665	54.54	1210	2.6	JRTFF39DN71S4
33	630	51.70	1210	2.8	
36	575	47.02	1220	3.1	
39	535	43.83	1220	3.3	
44	465	38.31	1230	3.8	
47	435	35.91	1210	4.0	
54	385	31.69	1170	4.6	
0.50HP					
0.25	106900	6715	20200	1.00	
0.29	94400	5925	20200	1.10	
0.33	80900	5153	20200	1.30	JRTFA129R79DN71M4
0.37	70200	4533	20200	1.50	JRTFAF129R79DN71M4
0.43	61600	3926	20200	1.70	JRTF129R79DN71M4
0.49	53500	3454	20200	2.0	JRTFF129R79DN71M4
0.56	46700	3031	20200	2.3	
0.56	48700	3037	12400	1.40	
0.62	44100	2756	12700	1.55	JRTFA109R79DN71M4
0.72	37900	2369	13000	1.80	JRTFAF109R79DN71M4
0.82	33100	2068	13200	2.0	JRTF109R79DN71M4
1.1	25300	1597	13600	2.7	JRTFF109R79DN71M4
0.86	32500	1970	7110	1.15	
0.99	28600	1722	7360	1.35	
1.1	25400	1527	7550	1.50	JRTFA99R59DN71M4
1.3	21300	1327	7770	1.80	JRTFAF99R59DN71M4
1.4	19400	1171	7870	1.95	JRTF99R59DN71M4
1.7	17000	1022	7980	2.2	JRTFF99R59DN71M4
1.9	14200	898	8110	2.7	
1.3	20800	1300	5680	1.25	
1.5	18600	1148	5870	1.40	
1.7	16200	1010	6050	1.65	
1.9	14300	887	6180	1.85	JRTFA89R59DN71M4
2.2	12500	780	6300	2.1	JRTFAF89R59DN71M4
2.5	10600	674	6410	2.5	JRTF89R59DN71M4
2.8	9780	609	6460	2.7	JRTFF89R59DN71M4
3.3	8230	515	6540	3.2	
3.8	7260	452	6590	3.6	

Output speed n_a [r/min]	Output torque T_a lbf · in	Ratio i	Permitted overhung load F_{Ra} [1] lbf	Service factor f_B	Model
0.50HP					
2.1	13100	810	3550	1.00	
2.4	11500	710	3800	1.15	
2.8	10100	615	3970	1.30	JRTFA79R39DN71M4
3.2	8900	538	4110	1.50	JRTFAF79R39DN71M4
3.5	7900	480	4200	1.70	JRTF79R39DN71M4
4.1	6710	413	4290	2.0	JRTFF79R39DN71M4
4.6	6030	367	4340	2.2	
5.3	5380	323	4380	2.5	
4.4	6340	384	2500	1.15	
5.0	5640	338	2620	1.30	JRTFA69R39DN71M4
5.6	5030	305	2710	1.45	JRTFAF69R39DN71M4
6.6	4220	257	2810	1.70	JRTF69R39DN71M4
7.4	3710	231	2860	1.95	JRTFF69R39DN71M4
6.7	4160	255	2270	1.30	JRTFA59R39DN71M4
8.5	3240	201	2420	1.65	JRTFAF59R39DN71M4
9.4	2940	181	2460	1.80	JRTF59R39DN71M4
6.5	4420	262	2230	1.20	JRTFF59R39DN71M4
7.5	3760	226	2340	1.40	JRTFA59R39DN71M4
8.5	3300	200	2410	1.60	JRTFAF59R39DN71M4
10	2800	170	2480	1.90	JRTF59R39DN71M4
11	2480	152	2530	2.1	JRTFF59R39DN71M4
13	2180	134	2560	2.4	
9.8	2900	175	1530	1.20	JRTFA49R19DN71M4
12	2440	147	1630	1.45	JRTFAF49R19DN71M4
13	2150	130	1690	1.65	JRTF49R19DN71M4
4.1	7750	270.68	6570	3.4	JRTFF49R19DN71M4
4.3	7310	255.37	6590	3.6	JRTFA89DN80M6
4.8	6560	228.93	6630	4.0	JRTFAF89DN80M6
4.9	6470	225.79	4310	2.0	JRTF89DN80M6
5.5	5680	198.31	4360	2.3	JRTFF89DN80M6
5.8	5390	188.40	4380	2.5	JRTFA79DN80M6
6.6	4770	166.47	4410	2.8	JRTFAF79DN80M6
7.7	4070	142.27	4440	3.3	JRTF79DN80M6
6.0	5220	281.71	4390	2.5	JRTFF79DN80M6
6.5	4870	262.93	4400	2.7	JRTFA79DN71M4
7.5	4180	225.79	4440	3.2	JRTFAF79DN71M4
8.6	3670	198.31	4460	3.6	JRTF79DN71M4
5.6	5590	195.39	2630	1.30	JRTFF79DN71M4
6.4	4890	170.85	2730	1.50	JRTFA69DN80M6
6.8	4650	162.31	2760	1.55	JRTFAF69DN80M6
7.7	4080	142.40	2830	1.80	JRTF69DN80M6
9.1	3460	120.79	2890	2.1	JRTFF69DN80M6
7.4	4240	228.99	2810	1.70	
8.7	3620	195.39	2870	2.0	JRTFA69DN71M4
9.9	3160	170.85	2910	2.3	JRTFAF69DN71M4
10	3010	162.31	2920	2.4	JRTF69DN71M4
12	2640	142.40	2920	2.8	JRTFF69DN71M4
14	2230	120.79	2920	3.2	
7.0	4500	157.09	2220	1.20	JRTFA59DN80M6
8.1	3900	136.16	2320	1.35	JRTFAF59DN80M6
8.6	3640	127.27	2360	1.45	JRTF59DN80M6
10	3150	110.01	2430	1.70	JRTFF59DN80M6
8.5	3700	199.70	2350	1.45	
9.3	3400	183.60	2400	1.55	
11	2910	157.09	2470	1.80	JRTFA59DN71M4
12	2520	136.16	2520	2.1	JRTFAF59DN71M4
13	2360	127.27	2540	2.2	JRTF59DN71M4
15	2040	110.01	2580	2.6	JRTFF59DN71M4
18	1730	93.47	2580	3.1	
20	1540	83.46	2580	3.4	
11	2780	150.06	1560	1.25	
13	2410	130.07	1640	1.45	JRTFA49DN71M4
16	1940	105.09	1720	1.80	JRTFAF49DN71M4
19	1650	89.29	1760	2.1	JRTF49DN71M4
21	1470	79.72	1780	2.4	JRTFF49DN71M4
25	1260	68.09	1800	2.8	
26	1210	65.36	1810	2.9	



Output speed n_a [r/min]	Output torque T_a lbf · in	Ratio i	Permitted overhung load F_{Ra} [1] lbf	Service factor f_B	Model
0.75HP					
0.27	143100	6295	23700	1.10	JRTFA159R99DN80S4 JRTFAF159R99DN80S4 JRTF159R99DN80S4 JRTFF159R99DN80S4
0.31	118000	5404	25100	1.35	
0.61	60700	2780	27000	2.6	
0.70	53600	2427	27000	3.0	JRTFA159R99DN80S4 JRTFAF159R99DN80S4 JRTF159R99DN80S4 JRTFF159R99DN80S4
1.0	39200	1674	27000	4.1	
1.3	29600	1308	27000	5.4	
1.4	25800	1169	27000	6.2	
0.43	96100	3926	20200	1.10	JRTFA129R79DN80S4 JRTFAF129R79DN80S4 JRTF129R79DN80S4 JRTFF129R79DN80S4
0.49	83800	3454	20200	1.25	
0.56	73300	3031	20200	1.45	
0.71	59000	2369	11800	1.15	JRTFA109R79DN80S4 JRTFAF109R79DN80S4 JRTF109R79DN80S4 JRTFF109R79DN80S4
0.82	51500	2068	12200	1.30	
0.93	43900	1826	12700	1.55	
1.1	39500	1597	12900	1.70	
1.2	34400	1401	13200	1.95	
1.4	29900	1243	13400	2.3	
1.6	26900	1087	13500	2.5	
1.8	22800	950	13700	3.0	
2.0	19800	834	13900	3.4	
2.6	15500	640	14100	4.4	
1.3	33100	1327	7070	1.15	JRTFA99R59DN80S4 JRTFAF99R59DN80S4 JRTF99R59DN80S4 JRTFF99R59DN80S4
1.4	29800	1171	7280	1.25	
1.6	26100	1022	7510	1.45	
1.9	22100	898	7730	1.70	
2.1	19700	784	7860	1.95	
2.5	17000	690	7980	2.2	
2.8	15000	605	8070	2.5	
3.2	13000	529	8160	2.9	
3.6	11400	467	8220	3.3	
4.2	9870	406	8280	3.9	
4.7	8850	363	8320	4.3	
1.9	22200	887	5560	1.20	JRTFA89R59DN80S4 JRTFAF89R59DN80S4 JRTF89R59DN80S4 JRTFF89R59DN80S4
2.2	19400	780	5800	1.35	
2.5	16600	674	6020	1.60	
2.8	15100	609	6120	1.75	
3.3	12800	515	6280	2.1	
3.7	11200	452	6370	2.4	
4.9	8400	345	6530	3.2	
3.5	12100	480	3710	1.10	JRTFA79R39DN80S4 JRTFAF79R39DN80S4 JRTF79R39DN80S4 JRTFF79R39DN80S4
4.1	10300	413	3950	1.30	
4.6	9290	367	4070	1.45	
5.2	8240	323	4170	1.60	
6.6	6500	257	2470	1.10	JRTFA69R39DN80S4 JRTFAF69R39DN80S4 JRTF69R39DN80S4 JRTFF69R39DN80S4
7.3	5760	231	2600	1.25	
8.2	5160	205	2690	1.40	
9.7	4390	175	2790	1.65	
4.1	11400	270.68	6370	2.3	JRTFA89DN90S6 JRTFAF89DN90S6 JRTF89DN90S6 JRTFF89DN90S6
4.4	10700	255.37	6400	2.5	
4.9	9660	228.93	6470	2.8	
5.7	8320	197.20	6540	3.2	
6.2	7590	179.97	6580	3.5	
5.0	9530	225.79	4040	1.40	JRTFA79DN90S6 JRTFAF79DN90S6 JRTF79DN90S6 JRTFF79DN90S6
5.7	8370	198.31	4160	1.60	
5.9	7950	188.40	4200	1.65	
6.7	7020	166.47	4270	1.90	
7.9	6000	142.27	4340	2.2	
8.6	5500	130.42	4370	2.4	

Output speed n_a [r/min]	Output torque T_a lbf · in	Ratio i	Permitted overhung load F_{Ra} [1] lbf	Service factor f_B	Model
0.75HP					
7.5	6310	225.79	4320	2.1	JRTFA79DN80S4 JRTFAF79DN80S4 JRTF79DN80S4 JRTFF79DN80S4
8.5	5540	198.31	4370	2.4	
9.0	5270	188.40	4380	2.5	
10	4650	166.47	4410	2.9	
12	3980	142.27	4440	3.3	
13	3640	130.42	4460	3.6	
15	3200	114.45	4470	4.1	
16	3030	108.46	4480	4.4	
18	2650	94.93	4490	5.0	
8.7	5460	195.39	2650	1.35	JRTFA69DN80S4 JRTFAF69DN80S4 JRTF69DN80S4 JRTFF69DN80S4
9.9	4780	170.85	2750	1.50	
10	4540	162.31	2770	1.60	
12	3980	142.40	2840	1.80	
14	3370	120.79	2890	2.1	
16	3050	109.04	2920	2.4	
18	2680	95.94	2920	2.7	
19	2530	90.59	2920	2.9	
21	2230	79.76	2920	3.2	
11	4390	157.09	2230	1.20	JRTFA59DN80S4 JRTFAF59DN80S4 JRTF59DN80S4 JRTFF59DN80S4
12	3810	136.16	2330	1.40	
13	3560	127.27	2370	1.50	
15	3070	110.01	2440	1.70	
18	2610	93.47	2510	2.0	
20	2330	83.46	2550	2.3	
23	2040	72.98	2580	2.6	
25	1900	68.22	2580	2.8	
29	1640	58.97	2580	3.2	
16	2940	105.09	1520	1.20	JRTFA49DN80S4 JRTFAF49DN80S4 JRTF49DN80S4 JRTFF49DN80S4
19	2490	89.29	1620	1.40	
21	2230	79.72	1670	1.60	
25	1900	68.09	1730	1.85	
26	1820	65.36	1740	1.95	
30	1580	56.49	1770	2.2	
35	1340	48.00	1800	2.6	
39	1190	42.86	1810	3.0	
29	1630	58.32	1010	1.10	JRTFA39DN80S4 JRTFAF39DN80S4 JRTF39DN80S4 JRTFF39DN80S4
31	1520	54.54	1040	1.15	
33	1440	51.70	1070	1.20	
36	1310	47.02	1100	1.35	
39	1220	43.83	1120	1.45	
44	1070	38.31	1110	1.65	
47	1000	35.91	1100	1.75	
53	880	31.69	1070	2.0	
60	785	28.09	1040	2.2	
71	665	23.88	1000	2.6	
72	660	23.63	1000	2.7	JRTFA39DN80S4 JRTFAF39DN80S4 JRTF39DN80S4 JRTFF39DN80S4
82	575	20.57	970	3.1	
88	535	19.27	950	3.3	
99	475	17.03	920	3.7	
118	400	14.33	880	4.4	
1.0HP					
0.32	157700	5404	22600	1.00	JRTFA159R99DN80M4 JRTFAF159R99DN80M4 JRTF159R99DN80M4 JRTFF159R99DN80M4
0.36	138100	4831	24000	1.15	
0.42	115500	4130	25200	1.40	
0.63	81100	2780	26600	1.95	

Output speed n_a [r/min]	Output torque T_a lbf · in	Ratio i	Permitted overhung load F_{Ra} [1] lbf	Service factor f_B	Model
1.0HP					
0.72	71700	2427	26900	2.2	
0.80	63200	2185	27000	2.5	JRTFA159R99DN80M4
0.90	56200	1944	27000	2.8	JRTFAF159R99DN80M4
1.1	51800	1674	27000	3.1	JRTF159R99DN80M4
1.3	39300	1308	27000	4.0	JRTFF159R99DN80M4
1.5	34500	1169	27000	4.6	
0.58	95800	3031	20200	1.10	JRTFA129R79DN80M4 JRTFAF129R79DN80M4 JRTF129R79DN80M4 JRTFF129R79DN80M4
0.66	86600	2672	20200	1.20	
0.74	75600	2357	20200	1.40	
0.86	65100	2038	20200	1.65	JRTFA129R79DN80M4
0.98	56600	1784	20200	1.85	JRTFAF129R79DN80M4
1.1	50700	1606	20200	2.1	JRTF129R79DN80M4
1.3	43900	1390	20200	2.4	JRTFF129R79DN80M4
1.4	38200	1220	20200	2.8	
0.82	68100	2129	11200	1.00	
0.97	57500	1813	11900	1.20	
1.1	51500	1590	12200	1.35	
1.2	46300	1436	12500	1.50	JRTFA109R79DN80M4
1.4	40500	1263	12900	1.70	JRTFAF109R79DN80M4
1.5	38100	1193	13000	1.80	JRTF109R79DN80M4
1.7	32200	1015	13300	2.1	JRTFF109R79DN80M4
1.9	29100	923	13400	2.4	
2.2	25000	800	13600	2.8	
0.85	67000	2068	11300	1.00	
0.96	57700	1826	11900	1.20	
1.1	51500	1597	12200	1.30	
1.2	44900	1401	12600	1.50	
1.4	39200	1243	12900	1.75	JRTFA109R79DN80M4
1.6	35100	1087	13100	1.95	JRTFAF109R79DN80M4
1.8	30000	950	13400	2.3	JRTF109R79DN80M4
2.1	26100	834	13600	2.6	JRTFF109R79DN80M4
2.4	22800	736	13700	3.0	
2.7	20300	640	13900	3.3	
4.0	13800	436	14100	4.9	
1.7	32900	1023	7080	1.15	JRTFA99R59DN80M4 JRTFAF99R59DN80M4 JRTF99R59DN80M4 JRTFF99R59DN80M4
1.7	33800	1022	7020	1.15	
1.9	28900	898	7340	1.30	
2.2	25600	784	7540	1.50	
2.5	22200	690	7730	1.70	JRTFA99R59DN80M4
2.9	19500	605	7860	1.95	JRTFAF99R59DN80M4
3.3	17000	529	7980	2.2	JRTF99R59DN80M4
3.7	15000	467	8080	2.5	JRTFF99R59DN80M4
4.3	12900	406	8160	3.0	
4.8	11500	363	8220	3.3	
2.0	29800	892	7280	1.25	
2.3	25300	760	7550	1.50	
2.6	22200	667	7730	1.70	JRTFA99R59DN80M4
3.1	18800	569	7900	2.0	JRTFAF99R59DN80M4
3.4	16800	510	7990	2.3	JRTF99R59DN80M4
3.7	15500	473	8050	2.5	JRTFF99R59DN80M4
4.3	13100	403	8160	2.9	
2.3	24200	748	5380	1.10	JRTFA89R59DN80M4 JRTFAF89R59DN80M4 JRTF89R59DN80M4 JRTFF89R59DN80M4

Output speed n_a [r/min]	Output torque T_a lbf · in	Ratio i	Permitted overhung load F_{Ra} [1] lbf	Service factor f_B	Model
1.0HP					
2.2	25300	780	5270	1.05	
2.6	21700	674	5610	1.20	
2.9	19700	609	5780	1.35	JRTFA89R59DN80M4
3.4	16600	515	6020	1.60	JRTFAF89R59DN80M4
3.9	14600	452	6160	1.80	JRTF89R59DN80M4
5.1	11000	345	6390	2.4	JRTFF89R59DN80M4
5.8	9510	300	6470	2.8	
2.6	22100	662	5570	1.20	
3.0	19700	592	5780	1.35	
3.4	17200	519	5970	1.55	JRTFA89R59DN80M4
3.8	15500	468	6100	1.70	JRTFAF89R59DN80M4
4.4	13100	398	6260	2.0	JRTF89R59DN80M4
5.0	11400	350	6360	2.3	JRTFF89R59DN80M4
5.6	10300	315	6430	2.6	
6.2	9170	281	6490	2.9	
4.8	12000	367	3730	1.10	
5.4	10600	323	3910	1.25	JRTFA79R39DN80M4
6.3	9190	280	4080	1.45	JRTFAF79R39DN80M4
7.1	8130	247	4180	1.65	JRTF79R39DN80M4
7.9	7240	221	4250	1.85	JRTFF79R39DN80M4
8.8	6460	199	4310	2.0	
6.0	9600	292	4040	1.00	JRTFA79R39DN80M4 JRTFAF79R39DN80M4 JRTF79R39DN80M4 JRTFF79R39DN80M4
8.5	6710	205	2430	1.10	JRTFA69R39DN80M4 JRTFAF69R39DN80M4
10	5710	175	2610	1.25	JRTF69R39DN80M4 JRTFF69R39DN80M4
8.7	6590	200	2460	1.10	JRTFA69R39DN80M4 JRTFAF69R39DN80M4
10.0	6790	176	2600	1.25	JRTF69R39DN80M4 JRTFF69R39DN80M4
11	5050	155	2120	1.05	JRTFA59R39DN80M4 JRTFAF59R39DN80M4 JRTF59R39DN80M4 JRTFF59R39DN80M4
11	5010	152	2120	1.05	JRTFA59R39DN80M4 JRTFAF59R39DN80M4
13	4410	134	2230	1.20	JRTF59R39DN80M4 JRTFF59R39DN80M4
4.2	14900	276.77	8080	2.5	JRTFA99DN90S6
4.6	13700	253.41	8130	2.8	JRTFAF99DN90S6
5.2	12100	223.88	8200	3.1	JRTF99DN90S6 JRTFF99DN90S6
4.3	14600	270.68	6160	1.80	
4.6	13800	255.37	6220	1.90	
5.1	12300	228.93	6310	2.1	JRTFA89DN90S6
5.9	10600	197.20	6410	2.5	JRTFAF89DN90S6
6.5	9730	179.97	6460	2.7	JRTF89DN90S6
7.3	8630	159.61	6520	3.1	JRTFF89DN90S6
6.5	9730	270.68	6460	2.7	JRTFA89DN80M4
6.9	9180	255.37	6490	2.9	JRTFAF89DN80M4
7.7	8230	228.93	6540	3.2	JRTF89DN80M4 JRTFF89DN80M4
5.9	10700	198.31	3910	1.25	
6.2	10100	188.40	3970	1.30	
7.0	9000	166.47	4100	1.45	
8.2	7690	142.27	4220	1.70	JRTFA79DN90S6
8.9	7050	130.42	4270	1.90	JRTFAF79DN90S6
10	6180	114.45	4330	2.1	JRTF79DN90S6
11	5860	108.46	4350	2.3	JRTFF79DN90S6
12	5130	94.93	4390	2.6	
14	4620	85.52	4420	2.9	

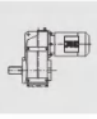



Output speed n_a [r/min]	Output torque T_a lbf · in	Ratio i	Permitted overhung load F_{Ra} [1] lbf	Service factor f_B	Model
1.0HP					
7.8	8120	225.79	4180	1.65	
8.8	7130	198.31	4260	1.85	
9.3	6770	188.40	4290	1.95	JRTFA79DN80M4
11	5980	166.47	4340	2.2	JRTFAF79DN80M4
12	5110	142.27	4390	2.6	JRTF79DN80M4
13	4690	130.42	4410	2.8	JRTFF79DN80M4
15	4110	114.45	4440	3.2	
16	3900	108.46	4450	3.4	
9.7	6530	120.79	2470	1.10	
11	5890	109.04	2580	1.25	
12	5180	95.94	2690	1.40	
13	4890	90.59	2730	1.50	JRTFA69DN90S6
15	4310	79.76	2800	1.70	JRTFAF69DN90S6
17	3650	67.65	2870	2.0	JRTF69DN90S6
19	3300	61.07	2900	2.2	JRTFF69DN90S6
22	2900	53.73	2920	2.5	
23	2740	50.74	2920	2.6	
9.0	7030	195.39	2370	1.05	
10	6140	170.85	2540	1.20	
11	5840	162.31	2590	1.25	
12	5120	142.40	2700	1.40	
14	4340	120.79	2800	1.65	JRTFA69DN80M4
16	3920	109.04	2840	1.85	JRTFAF69DN80M4
18	3450	95.94	2890	2.1	JRTF69DN80M4
19	3250	90.59	2900	2.2	JRTFF69DN80M4
22	2860	79.76	2920	2.5	
26	2430	67.65	2920	3.0	
29	2190	61.07	2920	3.3	
12	5050	93.47	2120	1.05	
14	4510	83.46	2210	1.20	
16	3940	72.98	2310	1.35	
17	3680	68.22	2350	1.45	JRTFA59DN90S6
20	3180	58.97	2430	1.65	JRTFAF59DN90S6
23	2700	50.10	2500	1.95	JRTF59DN90S6
26	2410	44.73	2530	2.2	JRTFF59DN90S6
30	2060	38.21	2570	2.6	
33	1930	35.79	2530	2.7	
13	4890	136.16	2140	1.10	
14	4570	12.727	2200	1.15	
16	3950	110.01	2310	1.35	
19	3360	93.47	2400	1.60	JRTFA59DN80M4
21	3000	83.46	2450	1.75	JRTFAF59DN80M4
24	2620	72.98	2510	2.0	JRTF59DN80M4
26	2450	68.22	2530	2.2	JRTFF59DN80M4
30	2120	58.97	2570	2.5	
35	1800	50.10	2480	2.9	
39	1600	44.73	2410	3.3	
21	3050	56.49	1490	1.15	
24	2590	48.00	1600	1.35	
27	2310	42.86	1660	1.55	JRTFA49DN90S6
32	1970	36.61	1720	1.80	JRTFAF49DN90S6
34	1850	34.29	1730	1.90	JRTF49DN90S6
40	1560	28.88	1760	2.3	JRTFF49DN90S6

Output speed n_a [r/min]	Output torque T_a lbf · in	Ratio i	Permitted overhung load F_{Ra} [1] lbf	Service factor f_B	Model
1.0HP					
20	3210	89.29	1440	1.10	
22	2860	79.72	1540	1.25	
26	2450	68.09	1630	1.45	
27	2350	65.36	1650	1.50	JRTFA49DN80M4
31	2030	56.49	1710	1.75	JRTFAF49DN80M4
36	1720	48.00	1750	2.0	JRTF49DN80M4
41	1540	42.86	1760	2.3	JRTFF49DN80M4
48	1310	36.61	1690	2.7	
51	1230	34.29	1670	2.9	
61	1030	28.88	1600	3.4	
37	1710	31.69	980	1.05	JRTFA39DN90S6
41	1510	28.09	1050	1.15	JRTFAF39DN90S6
49	1290	23.88	1020	1.35	JRTF39DN90S6
37	1690	47.02	990	1.05	JRTFF39DN90S6
40	1570	43.83	1030	1.10	
46	1370	38.31	1030	1.30	JRTFA39DN80M4
49	1290	35.91	1020	1.35	JRTFAF39DN80M4
55	1140	31.69	1000	1.55	JRTF39DN80M4
62	1010	28.09	980	1.75	JRTFF39DN80M4
73	850	23.88	950	2.1	
74	850	23.63	950	2.1	
85	740	20.57	920	2.4	JRTFA39DN80M4
91	690	19.27	900	2.5	JRTFAF39DN80M4
103	610	17.03	880	2.9	JRTF39DN80M4
122	515	14.33	840	3.4	JRTFF39DN80M4
136	460	12.87	820	3.8	
1.5HP					
0.63	126700	2780	24600	1.25	
0.73	112000	2427	25400	1.40	
0.81	99500	2185	25900	1.60	
0.91	88500	1944	26300	1.80	
1.1	79600	1674	26600	2.0	JRTFA159R99DN90S4
1.4	61100	1308	27000	2.6	JRTFAF159R99DN90S4
1.5	53900	1169	27000	3.0	JRTF159R99DN90S4
1.9	42700	953	27000	3.7	JRTFF159R99DN90S4
2.1	37100	845	27000	4.3	
4.0	19600	446	27000	8.1	
5.8	13300	302	27000	12	
0.86	99000	2038	20200	1.05	
0.99	86200	1784	20200	1.25	
1.1	77400	1606	20200	1.35	
1.3	67000	1390	20200	1.60	JRTFA129R79DN90S4
1.4	58400	1220	20200	1.80	JRTFAF129R79DN90S4
1.6	52100	1077	20200	2.0	JRTF129R79DN90S4
1.9	44500	930	20200	2.4	JRTFF129R79DN90S4
2.1	39100	820	20200	2.7	
1.4	61500	1263	11600	1.15	
1.5	57900	1193	11800	1.20	
1.7	49100	1015	12400	1.40	JRTFA109R79DN90S4
1.9	44400	923	12600	1.55	JRTFAF109R79DN90S4
2.2	38300	800	13000	1.80	JRTF109R79DN90S4
2.5	33100	696	13200	2.1	JRTFF109R79DN90S4

Output speed n_a [r/min]	Output torque T_a lbf · in	Ratio i	Permitted overhung load F_{Ra} [1)] lbf	Service factor f_B	Model
1.5HP					
1.3	68200	1401	11200	1.00	
1.4	59900	1243	11700	1.15	
1.6	53100	1087	12100	1.30	
1.9	45800	950	12600	1.50	JRTFA109R79DN90S4
2.1	39900	834	12900	1.70	JRTFAF109R79DN90S4
2.4	35000	736	13100	1.95	JRTF109R79DN90S4
2.8	30900	640	13400	2.2	JRTFF109R79DN90S4
3.1	26500	560	13600	2.6	
3.6	23100	489	13700	2.9	
2.7	31900	644	13300	2.2	JRTFA109R79DN90S4
3.0	29200	591	13400	2.4	JRTFAF109R79DN90S4
3.4	25500	518	13600	2.7	JRTF109R79DN90S4
3.6	24100	491	13700	2.9	JRTFF109R79DN90S4
2.6	33600	690	7030	1.15	
2.9	29600	605	7300	1.30	
3.3	25800	529	7530	1.45	JRTFA99R59DN90S4
3.8	22700	467	7700	1.65	JRTFAF99R59DN90S4
4.3	19600	406	7860	1.95	JRTF99R59DN90S4
4.8	17600	363	7960	2.2	JRTFF99R59DN90S4
6.2	13900	285	8120	2.7	
2.3	38100	760	6710	1.00	
2.6	33400	667	7050	1.15	
3.1	28300	569	7380	1.35	
3.5	25400	510	7550	1.50	JRTFA99R59DN90S4
3.7	23400	473	7660	1.60	JRTFAF99R59DN90S4
4.4	19900	403	7850	1.90	JRTF99R59DN90S4
4.9	17800	361	7950	2.1	JRTFF99R59DN90S4
5.6	15500	317	8050	2.4	
6.4	13700	275	8130	2.8	
3.4	25200	515	5280	1.05	
3.9	22200	452	5570	1.20	JRTFA89R59DN90S4
5.1	16700	345	6010	1.60	JRTFAF89R59DN90S4
5.9	14500	300	6170	1.85	JRTF89R59DN90S4
7.1	12000	249	6330	2.2	JRTFF89R59DN90S4
3.4	26000	519	4900	1.00	
3.8	23400	468	5460	1.15	
4.4	19800	398	5770	1.35	
5.0	17300	350	5960	1.55	JRTFA89R59DN90S4
5.6	15600	315	6090	1.70	JRTFAF89R59DN90S4
6.3	13900	281	6210	1.90	JRTF89R59DN90S4
7.3	11900	240	6330	2.2	JRTFF89R59DN90S4
8.3	10400	211	6420	2.5	
9.1	9630	193	6470	2.8	
7.1	12200	247	3700	1.10	JRTFA79R39DN90S4
8.0	10900	221	3880	1.20	JRTFAF79R39DN90S4
8.9	9770	199	4020	1.35	JRTF79R39DN90S4
4.3	22100	276.77	7730	1.70	JRTFF79R39DN90S4
4.7	20200	253.41	7830	1.90	JRTFA99DN90L6
5.3	17800	223.88	7940	2.1	JRTFAF99DN90L6
6.2	15100	189.92	8070	2.5	JRTF99DN90L6
6.8	13900	174.87	8120	2.7	JRTFF99DN90L6
6.4	14800	276.77	8080	2.6	JRTFA99DN90S4
7.0	13500	253.41	8140	2.8	JRTFAF99DN90S4
7.9	12000	223.88	8200	3.2	JRTF99DN90S4
					JRTFF99DN90S4

Output speed n_a [r/min]	Output torque T_a lbf · in	Ratio i	Permitted overhung load F_{Ra} [1)] lbf	Service factor f_B	Model
1.5HP					
6.0	15700	197.20	6080	1.70	JRTFA89DN90L6
6.6	14300	179.97	6180	1.85	JRTFAF89DN90L6
7.4	12700	159.61	6280	2.1	JRTF89DN90L6
6.5	14500	270.68	6170	1.85	JRTFF89DN90L6
6.9	13600	255.37	6220	1.95	
7.7	12200	228.93	6310	2.2	JRTFA89DN90S4
8.9	10500	197.20	6420	2.5	JRTFAF89DN90S4
9.8	9650	179.97	6470	2.8	JRTF89DN90S4
11	8560	159.61	6530	3.1	JRTFF89DN90S4
13	7190	134.16	6600	3.7	
14	6610	123.29	6620	4.0	
7.8	12100	225.79	3720	1.10	
8.9	10600	198.31	3920	1.25	
9.3	10100	188.40	3980	1.30	
11	8920	166.47	4110	1.50	
12	7630	142.27	4220	1.75	JRTFA79DN90S4
14	6990	130.42	4270	1.90	JRTFAF79DN90S4
15	6130	114.45	4330	2.2	JRTF79DN90S4
16	5810	108.46	4350	2.3	JRTFF79DN90S4
19	5090	94.93	4390	2.6	
21	4580	85.52	4420	2.9	
23	4020	75.02	4440	3.3	
15	6470	120.79	2480	1.10	
16	5840	109.04	2590	1.25	
18	5140	95.94	2700	1.40	
19	4850	90.59	2740	1.50	
22	4270	79.76	2800	1.70	JRTFA69DN90S4
26	3620	67.65	2870	2.0	JRTFAF69DN90S4
29	3270	61.07	2900	2.2	JRTF69DN90S4
33	2880	53.73	2920	2.5	JRTFF69DN90S4
35	2720	50.74	2920	2.7	
41	2310	43.20	2900	3.1	
45	2100	39.26	2920	3.3	
52	1820	34.01	2920	3.6	
19	5010	93.47	2120	1.05	
21	4470	83.46	2220	1.20	
24	3910	72.98	2320	1.35	
26	3650	68.22	2360	1.45	JRTFA59DN90S4
30	3160	58.97	2430	1.70	JRTFAF59DN90S4
35	2680	50.10	2340	2.0	JRTF59DN90S4
39	2390	44.73	2290	2.2	JRTFF59DN90S4
46	2040	38.21	2200	2.6	
49	1910	35.79	2170	2.8	
58	1610	30.15	2080	3.2	
51	1830	34.24	2140	2.4	JRTFA59DN90S4
					JRTFAF59DN90S4
					JRTF59DN90S4
					JRTFF59DN90S4
27	3500	65.36	1340	1.00	
31	3030	56.49	1490	1.15	
37	2570	48.00	1600	1.35	JRTFA49DN90S4
41	2290	42.86	1620	1.55	JRTFAF49DN90S4
48	1960	36.61	1580	1.80	JRTF49DN90S4
51	1830	34.29	1560	1.90	JRTFF49DN90S4
61	1540	28.88	1500	2.3	

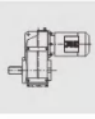



Output speed n_a [r/min]	Output torque T_a lbf · in	Ratio i	Permitted overhung load F_{Ra} [1] lbf	Service factor f_B	Model
1.5HP					
57	1650	30.86	1530	2.1	
60	1570	29.32	1510	2.2	JRTFA49DN90S4
68	1370	25.72	1470	2.6	JRTFAF49DN90S4
81	1170	21.82	1410	3.0	JRTF49DN90S4
89	1050	19.70	1380	3.4	JRTFF49DN90S4
56	1690	31.69	880	1.05	JRTFA39DN90S4
63	1500	28.09	870	1.15	JRTFAF39DN90S4
74	1280	23.88	860	1.40	JRTF39DN90S4 JRTFF39DN90S4
75	1260	1260	860	1.40	
86	1100	1100	840	1.60	
91	1030	1030	830	1.70	
103	910	910	810	1.95	
111	840	840	800	2.1	JRTFA39DN90S4 JRTFAF39DN90S4
123	765	765	790	2.3	JRTF39DN90S4
137	690	690	770	2.6	JRTFF39DN90S4
159	590	590	745	2.8	
169	555	555	735	2.9	
196	480	480	710	3.2	
435	215	215	580	6.9	
469	200	200	560	6.4	
517	183	183	545	6.8	JRTFA39DN80M2
576	164	164	530	7.3	JRTFAF39DN80M2
669	141	141	505	7.8	JRTF39DN80M2 JRTFF39DN80M2
711	133	133	500	8.0	
826	114	114	475	8.5	
925	102	102	460	9.1	
2.0HP					
0.73	152400	2427	23000	1.05	
0.81	135800	2185	24100	1.15	
0.91	120800	1944	24900	1.30	
1.1	107500	1674	25600	1.50	JRTFA159R99DN90L4
1.4	82800	1308	26500	1.90	JRTFAF159R99DN90L4
1.5	73300	1169	26800	2.2	JRTF159R99DN90L4
1.9	58600	953	27000	2.7	JRTFF159R99DN90L4
2.1	51200	845	27000	3.1	
4.0	27000	446	27000	5.9	
5.8	18300	302	27000	8.7	
1.1	104100	1606	20200	1.00	
1.3	90100	1390	20200	1.20	
1.4	78700	1220	20200	1.35	
1.6	70000	1077	20200	1.50	JRTFA129R79DN90L4
1.9	60000	930	20200	1.75	JRTFAF129R79DN90L4
2.1	52700	820	20200	2.0	JRTF129R79DN90L4
2.4	46500	727	20200	2.3	JRTFF129R79DN90L4
2.7	42100	648	20200	2.5	
3.2	35700	549	20200	3..0	
1.7	66000	1015	11300	1.05	JRTFA109R79DN90L4
1.9	59800	823	11700	1.15	JRTFAF109R79DN90L4
2.2	51600	800	12200	1.35	JRTF109R79DN90L4
2.5	44700	696	12600	1.55	JRTFF109R79DN90L4
1.9	61600	950	11600	1.10	JRTFA109R79DN90L4
2.1	53800	834	12100	1.25	JRTFAF109R79DN90L4
2.4	47300	736	12500	1.45	JRTF109R79DN90L4
2.8	41600	640	12800	1.65	JRTFF109R79DN90L4

Output speed n_a [r/min]	Output torque T_a lbf · in	Ratio i	Permitted overhung load F_{Ra} [1] lbf	Service factor f_B	Model
2.0HP					
3.1	35800	560	13100	1.90	JRTFA109R79DN90L4
3.6	31300	489	13300	2.2	JRTFAF109R79DN90L4
4.0	28300	436	13500	2.4	JRTF109R79DN90L4
4.8	24000	370	13700	2.8	JRTFF109R79DN90L4
2.7	42800	644	12700	1.60	
3.0	39200	591	12900	1.75	JRTFA109R79DN90L4
3.4	34200	518	13200	2.0	JRTFAF109R79DN90L4
3.6	32400	491	13300	2.1	JRTF109R79DN90L4
4.1	28200	430	13500	2.5	JRTFF109R79DN90L4
4.6	25400	387	13600	2.7	
3.3	34500	529	6970	1.10	
3.8	30500	467	7240	1.25	
4.4	26300	406	7490	1.45	JRTFA99R59DN90L4
4.9	23600	363	7650	1.60	JRTFAF99R59DN90L4
6.2	18600	285	7910	2.0	JRTF99R59DN90L4
7.2	16000	245	8030	2.4	JRTFF99R59DN90L4
8.5	13600	208	8130	2.8	
9.1	12600	195	8170	3.0	
3.5	34000	510	7010	1.10	
3.7	31400	473	7180	1.20	JRTFA99R59DN90L4
4.4	26600	403	7480	1.45	JRTFAF99R59DN90L4
4.9	23900	361	7630	1.60	JRTF99R59DN90L4
5.6	20900	317	7790	1.80	JRTFF99R59DN90L4
6.4	18300	275	7920	2.1	
7.3	16100	242	8030	2.4	
5.1	22400	345	5540	1.20	JRTFA89R59DN90L4
5.9	19500	300	5800	1.35	JRTFAF89R59DN90L4
7.1	16100	249	6050	1.65	JRTF89R59DN90L4 JRTFF89R59DN90L4
5.0	23200	350	5470	1.15	
5.6	20900	315	5680	1.25	JRTFA89R59DN90L4
6.3	18600	281	5870	1.40	JRTFAF89R59DN90L4
7.4	16000	240	6060	1.65	JRTF89R59DN90L4
8.4	14000	211	6200	1.90	JRTFF89R59DN90L4
9.2	12800	193	6280	2.1	
4.6	27100	254.40	13500	2.5	JRTFA109DN100L6
5.5	22900	215.37	13700	3.0	JRTFAF109DN100L6
5.9	21200	199.31	13800	3.2	JRTF109DN100L6
6.6	19000	178.64	13900	3.6	JRTFF109DN100L6
4.3	29500	276.77	7300	1.30	
4.7	27000	253.41	7460	1.40	JRTFA99DN100L6
5.3	23800	223.88	7640	1.60	JRTFAF99DN100L6
6.2	20200	189.92	7830	1.90	JRTF99DN100L6
6.8	18600	174.87	7910	2.0	JRTFF99DN100L6
6.4	19700	276.77	7850	1.95	
7.0	18000	253.41	7930	2.1	JRTFA99DN90L4
7.9	15900	223.88	8030	2.4	JRTFAF99DN90L4
9.3	13500	189.92	8140	2.8	JRTF99DN90L4
10	12400	174.87	8180	3.0	JRTFF99DN90L4
6.5	19300	270.68	5810	1.40	
6.9	18200	255.37	5900	1.45	
7.7	16300	228.93	6040	1.65	
9.0	14000	197.20	6200	1.90	JRTFA89DN90L4
9.8	12800	179.97	6280	2.1	JRTFAF89DN90L4
11	11300	159.61	6370	2.3	JRTF89DN90L4
13	9560	134.16	6470	2.8	JRTFF89DN90L4
14	8790	123.29	6510	3.0	
16	7800	109.49	6560	3.4	
18	6980	97.89	6610	3.8	

Output speed n_a [r/min]	Output torque T_a lbf · in	Ratio i	Permitted overhung load F_{Ra} [1] lbf	Service factor f_B	Model
2.0HP					
11	11800	166.47	3750	1.10	
12	10100	142.27	3980	1.30	
14	9300	130.42	4070	1.45	
15	8160	114.45	4180	1.65	
16	7730	108.46	4210	1.70	
19	6760	94.93	4290	1.95	
21	6090	85.52	4330	2.2	JRTFA79DN90L4 JRTFAF79DN90L4 JRTF79DN90L4 JRTFF79DN90L4
24	5350	75.02	4380	2.5	
24	5160	72.50	4390	2.6	
27	4730	66.46	4410	2.8	
30	4150	58.32	4440	3.2	
32	3940	55.27	4450	3.4	
37	3440	48.37	4460	3.9	
41	3100	43.58	4480	4.3	
46	2720	38.23	4490	4.9	
48	2600	36.58	4490	3.8	JRTFA79DN90L4 JRTFAF79DN90L4 JRTF79DN90L4 JRTFF79DN90L4
56	2240	31.51	4490	5.4	
18	6840	95.94	2410	1.05	
20	6460	90.59	2480	1.10	
22	5680	79.76	2620	1.30	
26	4820	67.65	2740	1.50	JRTFA69DN90L4 JRTFAF69DN90L4 JRTF69DN90L4 JRTFF69DN90L4
29	4350	61.07	2800	1.65	
33	3830	53.73	2850	1.90	
35	3610	50.74	2870	2.0	
41	3080	43.20	2920	2.4	
45	2790	39.26	2920	2.5	
52	2420	34.01	2920	2.7	
49	2580	36.30	2920	2.8	JRTFA69DN90L4 JRTFAF69DN90L4 JRTF69DN90L4 JRTFF69DN90L4
55	2280	32.08	2920	3.2	
64	1950	27.41	2920	3.7	
70	1790	25.13	2920	4.0	
24	5200	72.98	2090	1.00	
26	4860	68.22	2150	1.10	
30	4200	58.97	2270	1.25	JRTFA59DN90L4 JRTFAF59DN90L4 JRTF59DN90L4 JRTFF59DN90L4
35	3570	50.10	2210	1.50	
40	3190	44.73	2160	1.65	
46	2720	38.21	2100	1.95	
49	2550	35.79	2070	2.1	
59	2140	30.15	1990	2.4	
59	2130	29.94	1990	2.3	JRTFA59DN90L4 JRTFAF59DN90L4 JRTF59DN90L4 JRTFF59DN90L4
62	2020	28.45	1970	2.3	
71	1770	24.96	1910	2.9	
37	3420	48.00	1370	1.05	
41	3050	42.86	1480	1.15	JRTFA49DN90L4 JRTFAF49DN90L4 JRTF49DN90L4 JRTFF49DN90L4
48	2610	36.61	1460	1.35	
52	2440	34.29	1450	1.45	
61	2050	28.88	1410	1.70	
57	2200	30.86	1430	1.60	
60	2090	29.32	1420	1.70	
69	1830	25.72	1390	1.95	JRTFA49DN90L4 JRTFAF49DN90L4 JRTF49DN90L4 JRTFF49DN90L4
81	1550	21.82	1340	2.3	
90	1400	19.70	1320	2.5	
102	1230	17.33	1280	2.9	
108	1160	16.36	1260	3.0	
127	990	13.93	1220	3.6	

Output speed n_a [r/min]	Output torque T_a lbf · in	Ratio i	Permitted overhung load F_{Ra} [1] lbf	Service factor f_B	Model
2.0HP					
74	1700	23.88	770	1.05	JRTFA39DN90L4 JRTFAF39DN90L4 JRTF39DN90L4 JRTFF39DN90L4
86	1460	1460	765	1.20	
92	1370	1370	760	1.30	
104	1210	1210	750	1.45	
112	1120	1120	745	1.55	
123	1020	1020	735	1.75	
137	910	910	725	1.95	
159	790	790	705	2.1	JRTFA39DN90L4 JRTFAF39DN90L4 JRTF39DN90L4 JRTFF39DN90L4
170	740	740	700	2.2	
197	635	635	680	2.4	
220	570	570	660	2.6	
238	530	530	640	2.4	
262	480	480	625	2.6	
292	430	430	610	2.8	
339	370	370	590	3.0	
361	345	345	580	3.0	
391	320	320	580	4.8	
437	285	285	560	5.2	
471	265	265	545	4.8	
520	240	240	530	5.1	JRTFA39DN90S2 JRTFAF39DN90S2 JRTF39DN90S2 JRTFF39DN90S2
579	215	215	515	5.5	
673	187	187	495	5.9	
715	176	176	485	6.0	
831	152	152	465	6.4	
930	135	135	450	6.9	
3.0HP					
1.2	131400	1441	24400	1.20	
1.4	127100	1308	24600	1.25	
1.5	112900	1169	25300	1.40	
1.9	90900	953	26300	1.5	
2.1	79800	845	26600	2.0	JRTFA159R99DN100S4 JRTFAF159R99DN100S4 JRTF159R99DN100S4 JRTFF159R99DN100S4
2.3	71500	764	26900	2.2	
2.6	63600	680	27000	2.5	
3.1	53100	576	27000	3.0	
4.0	42100	446	27000	3.8	
5.8	28500	302	27000	5.6	
6.5	25600	273	27000	6.2	
7.6	21300	232	27000	7.5	
9.0	18100	197	27000	8.8	
3.6	45900	483	20200	2.3	JRTFA129R89DN100S4 JRTFAF129R89DN100S4 JRTF129R89DN100S4 JRTFF129R89DN100S4
4.2	40200	418	20200	2.6	
4.7	35800	374	20200	3.0	
1.6	106500	1077	20200	1.00	
1.9	91500	930	20200	1.15	
2.1	80500	820	20200	1.30	
2.4	71100	727	20200	1.50	JRTFA129R79DN100S4 JRTFAF129R79DN100S4 JRTF129R79DN100S4 JRTFF129R79DN100S4
2.7	64000	648	20200	1.65	
3.2	54200	549	20200	1.95	
3.6	48800	495	20200	2.2	
4.1	42200	428	20200	2.5	
4.7	36900	376	20200	2.9	
2.5	68300	696	11200	1.00	JRTFA109R79DN100S4 JRTFAF109R79DN100S4 JRTF109R79DN100S4 JRTFF109R79DN100S4
2.8	63300	640	11500	1.05	JRTFA109R79DN100S4 JRTFAF109R79DN100S4 JRTF109R79DN100S4 JRTFF109R79DN100S4
3.1	54800	560	12000	1.25	
3.6	47800	489	12400	1.40	

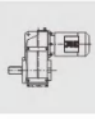



Output speed n_a [r/min]	Output torque T_a lbf · in	Ratio i	Permitted overhung load F_{Ra} [1] lbf	Service factor f_B	Model
3.0HP					
4.0	43100	436	12700	1.60	
4.8	36500	370	13100	1.85	JRTFA109R79DN100S4
5.3	32800	333	13300	2.1	JRTFAF109R79DN100S4
6.0	28700	291	13500	2.4	JRTF109R79DN100S4
6.9	25100	255	13600	2.7	JRTFF109R79DN100S4
2.7	64900	644	11400	1.05	
3.0	59400	591	11700	1.15	
3.4	52000	518	12200	1.35	
3.6	49200	491	12400	1.40	JRTFA109R79DN100S4
4.1	43000	430	12700	1.60	JRTFAF109R79DN100S4
4.5	38700	387	13000	1.80	JRTF109R79DN100S4
5.2	33800	340	13200	2.0	JRTFF109R79DN100S4
5.9	29700	300	13400	2.3	
6.6	26300	266	13600	2.6	
4.8	35900	363	6870	1.05	
6.2	28300	285	7380	1.35	JRTFA99R59DN100S4
7.2	24300	245	7610	1.55	JRTFAF99R59DN100S4
8.5	20600	208	7810	1.85	JRTF99R59DN100S4
9.0	19200	195	7880	1.95	JRTFF99R59DN100S4
4.9	36200	361	6850	1.05	JRTFA99R59DN100S4
5.6	31700	317	7160	1.20	JRTFAF99R59DN100S4
6.4	27800	275	7410	1.35	JRTF99R59DN100S4
7.3	24400	242	7610	1.55	JRTFF99R59DN100S4
7.1	24600	249	5340	1.10	JRTFA89R59DN100S4 JRTFAF89R59DN100S4 JRTF89R59DN100S4 JRTFF89R59DN100S4
7.3	24200	240	5380	1.10	JRTFA89R59DN100S4
8.3	21200	211	5650	1.25	JRTFAF89R59DN100S4
9.1	19500	193	5800	1.35	JRTF89R59DN100S4 JRTFF89R59DN100S4
4.6	40700	254.40	12800	1.65	
5.5	34500	215.37	13200	1.95	JRTFA109DN112M6
5.9	31900	199.31	13300	2.1	JRTFAF109DN112M6
6.6	28600	178.64	13500	2.4	JRTF109DN112M6 JRTFF109DN112M6
6.9	27200	254.40	13500	2.5	
8.2	23100	215.37	13700	2.9	JRTFA109DN100S4
8.8	21300	199.31	13800	3.2	JRTFAF109DN100S4
9.9	19100	178.64	13900	3.5	JRTF109DN100S4 JRTFF109DN100S4
5.3	35800	223.88	6880	1.05	
6.2	30400	189.92	7250	1.25	JRTFA99DN112M6
6.7	28000	174.87	7400	1.35	JRTFAF99DN112M6
7.5	25000	156.30	7570	1.50	JRTF99DN112M6 JRTFF99DN112M6
6.4	29600	276.77	7290	1.30	
7.0	27100	251.41	7450	1.40	
7.9	24000	223.88	7630	1.60	JRTFA99DN100S4
9.3	20300	189.92	7820	1.85	JRTFAF99DN100S4
10	18700	174.87	7900	2.0	JRTF99DN100S4
11	16700	156.30	8000	2.3	JRTFF99DN100S4
13	15000	140.71	8070	2.5	
14	13600	127.42	8130	2.8	
7.7	24500	228.93	5350	1.10	
8.9	21100	197.20	5660	1.25	
9.8	19300	179.97	5810	1.35	JRTFA89DN100S4
11	17100	159.61	5980	1.55	JRTFAF89DN100S4
13	14300	134.16	6180	1.85	JRTF89DN100S4
14	13200	123.29	6250	2.0	JRTFF89DN100S4
16	11700	109.49	6350	2.3	
18	10500	97.89	6270	2.5	

Output speed n_a [r/min]	Output torque T_a lbf · in	Ratio i	Permitted overhung load F_{Ra} [1] lbf	Service factor f_B	Model
3.0HP					
20	9440	88.01	6120	2.8	
23	8190	76.39	5920	3.2	JRTFA89DN100S4
26	7330	68.40	5760	3.6	JRTFAF89DN100S4
31	6080	56.75	5490	4.4	JRTF89DN100S4
35	5400	50.36	5320	4.8	JRTFF89DN100S4
39	4850	45.28	5170	5.1	
15	12200	114.45	3690	1.10	
16	11600	108.46	3790	1.15	
19	10100	94.93	3970	1.30	
21	9170	85.52	4080	1.45	
23	8040	75.02	4190	1.65	JRTFA79DN100S4
24	7770	72.50	4210	1.70	JRTFAF79DN100S4
27	7120	66.46	4260	1.85	JRTF79DN100S4
30	6250	58.32	4320	2.1	JRTFF79DN100S4
32	5920	55.27	4350	2.2	
36	5180	48.37	4390	2.6	
40	4670	43.58	4410	2.8	
48	3920	36.58	4450	2.5	JRTFA79DN100S4
56	3370	31.51	4470	3.6	JRTFAF79DN100S4
61	3080	28.75	4480	4.1	JRTF79DN100S4
69	2730	25.50	4490	4.8	JRTFF79DN100S4
26	7250	67.65	2320	1.00	
29	6550	61.07	2460	1.10	
33	5760	53.73	2600	1.25	JRTFA69DN100S4
35	5440	50.74	2650	1.35	JRTFAF69DN100S4
41	4630	43.20	2760	1.55	JRTF69DN100S4
45	4210	39.26	2810	1.65	JRTFF69DN100S4
52	3640	34.01	2870	1.80	
55	3440	32.08	2890	2.1	
64	2940	27.41	2920	2.5	
70	2690	25.13	2920	2.7	JRTFA69DN100S4
80	2360	22.05	2920	3.1	JRTFAF69DN100S4
84	2240	20.90	2920	3.2	JRTF69DN100S4
96	1960	18.29	2920	3.7	JRTFF69DN100S4
39	4790	44.73	1920	1.10	JRTFA59DN100S4
46	4090	38.21	1890	1.30	JRTFAF59DN100S4
					JRTF59DN100S4
					JRTFF59DN100S4
49	3830	35.79	1880	1.40	JRTFA59DN100S4
58	3230	30.15	1830	1.60	JRTFAF59DN100S4
					JRTF59DN100S4
					JRTFF59DN100S4
71	2670	24.96	1780	1.90	
83	2270	21.17	1720	2.3	JRTFA59DN100S4
92	2050	19.11	1680	2.6	JRTFAF59DN100S4
105	1800	16.81	1640	2.9	JRTF59DN100S4
111	1700	15.88	1620	3.1	JRTFF59DN100S4
61	3090	28.88	1240	1.15	JRTFA49DN100S4 JRTFAF49DN100S4 JRTF49DN100S4 JRTFF49DN100S4
68	2750	25.72	1230	1.30	
81	2340	21.82	1210	1.50	
89	2110	19.70	1190	1.65	
102	1850	17.33	1170	1.90	JRTFA49DN100S4
108	1750	16.36	1160	2.0	JRTFAF49DN100S4
126	1490	13.93	1130	2.4	JRTF49DN100S4
139	1350	12.66	1110	2.6	JRTFF49DN100S4
161	1170	10.97	1080	3.0	
197	960	8.96	1010	3.0	

Output speed n_a [r/min]	Output torque T_a lbf · in	Ratio i	Permitted overhung load F_{Ra} [1] lbf	Service factor f_B	Model
3.0HP					
123	1530	14.33	630	1.15	
137	1380	12.87	625	1.30	
159	1180	11.08	625	1.40	
169	1110	10.42	620	1.45	
196	960	8.97	610	1.60	JRTFA39DN100S4
220	850	8.01	600	1.75	JRTFAF39DN100S4
261	720	6.74	570	1.70	JRTF39DN100S4
291	645	6.05	560	1.85	JRTFF39DN100S4
338	555	5.21	550	2.0	
360	525	4.90	540	2.0	
418	450	4.22	525	2.1	
468	400	3.77	515	2.3	
474	395	7.44	515	3.2	
523	360	6.74	500	3.4	
583	320	6.05	490	3.7	JRTFA39DN90L2
676	275	5.21	475	4.0	JRTFAF39DN90L2
719	260	4.90	465	4.0	JRTF39DN90L2
836	225	4.22	450	4.3	JRTFF39DN90L2
935	200	3.77	435	4.6	
4.0HP					
1.5	152200	1169	23000	1.05	
1.9	122900	953	24800	1.30	
2.1	108200	845	25600	1.45	
2.3	97200	764	26000	1.65	JRTFA159R99DN100L4
2.6	86500	680	26400	1.85	JRTFAF159R99DN100L4
3.1	72500	576	26900	2.2	JRTF159R99DN100L4
4.0	57100	446	27000	2.8	JRTFF159R99DN100L4
5.8	38700	302	27000	4.1	
6.5	34700	273	27000	4.6	
7.6	29100	232	27000	5.5	
9.0	24700	197	27000	6.4	
2.4	95600	727	20200	1.10	JRTFA129R79DN100L4
2.7	85800	648	20200	1.25	JRTFAF129R79DN100L4
3.2	72700	549	20200	1.45	JRTF129R79DN100L4
3.6	65400	495	20200	1.60	JRTFF129R79DN100L4
4.0	57700	436	11900	1.20	JRTFA109R79DN100L4
4.8	48900	370	12400	1.40	JRTFAF109R79DN100L4
5.3	44000	333	12700	1.55	JRTF109R79DN100L4
6.1	38500	291	13000	1.75	JRTFF109R79DN100L4
4.6	54400	254.40	12100	1.25	JRTFA109DN132S6
5.5	46000	215.37	12500	1.45	JRTFAF109DN132S6
5.9	42600	199.31	12700	1.60	JRTF109DN132S6
6.6	38200	178.64	13000	1.80	JRTFF109DN132S6
6.9	36300	254.40	13100	1.85	
8.2	30700	215.37	13400	2.2	JRTFA109DN100L4
8.8	28400	199.31	13500	2.4	JRTFAF109DN100L4
9.9	25500	178.64	13600	2.7	JRTF109DN100L4
11	23000	161.28	13700	3.0	JRTFF109DN100L4
7.9	32000	223.88	7150	1.20	
9.3	27100	189.92	7450	1.40	
10	24900	174.87	7570	1.50	
11	22300	156.30	7720	1.70	JRTFA99DN100L4
13	20100	140.71	7840	1.90	JRTFAF99DN100L4
14	18200	127.42	7930	2.1	JRTF99DN100L4
16	16100	112.99	8020	2.4	JRTFF99DN100L4
17	14600	102.16	8090	2.6	
20	12800	89.85	8170	3.0	

Output speed n_a [r/min]	Output torque T_a lbf · in	Ratio i	Permitted overhung load F_{Ra} [1] lbf	Service factor f_B	Model
3.0HP					
13	19100	134.16	5820	1.40	
14	17600	123.29	5950	1.50	
16	15600	109.49	6050	1.70	
18	13900	97.89	5930	1.90	JRTFA89DN100L4
20	12500	88.01	5810	2.1	JRTFAF89DN100L4
23	10900	76.39	5650	2.4	JRTF89DN100L4
26	9770	68.40	5520	2.7	JRTFF89DN100L4
31	8110	56.75	5290	3.3	
35	7190	50.36	5150	3.6	
21	12200	85.52	3700	1.10	
24	10700	75.02	3910	1.25	
27	9500	66.46	4050	1.40	JRTFA79DN100L4
30	8330	58.32	4160	1.60	JRTFAF79DN100L4
32	7900	55.27	4200	1.70	JRTF79DN100L4
36	6910	48.37	4280	1.90	JRTFF79DN100L4
40	6220	43.58	4330	2.1	
46	5460	38.23	4370	2.4	
48	5220	36.58	4390	1.90	
56	4500	31.51	4420	2.7	JRTFA79DN100L4
61	4110	28.75	4440	3.1	JRTFAF79DN100L4
69	3640	25.50	4460	3.6	JRTF79DN100L4
82	3060	21.43	4480	4.3	JRTFF79DN100L4
41	6170	43.20	2530	1.15	JRTFA69DN100L4
45	5610	39.26	2630	1.25	JRTFAF69DN100L4
52	4860	34.01	2730	1.35	JRTF69DN100L4 JRTFF69DN100L4
55	4580	32.08	2770	1.60	
64	3910	27.41	2840	1.85	
70	3590	25.13	2870	2.0	JRTFA69DN100L4
80	3150	22.05	2910	2.3	JRTFAF69DN100L4
84	2980	20.90	2920	2.4	JRTF69DN100L4
96	2610	18.29	2920	2.8	JRTFF69DN100L4
107	2350	16.48	2920	3.1	
122	2060	14.46	2920	3.5	
71	3560	24.96	1640	1.45	
83	3020	21.17	1610	1.75	
92	2730	19.11	1580	1.95	JRTFA59DN100L4
105	2400	16.81	1550	2.2	JRTFAF59DN100L4
111	2260	15.88	1530	2.3	JRTF59DN100L4
130	1930	13.52	1480	2.8	JRTFF59DN100L4
144	1750	12.29	1460	3.0	
166	1520	10.64	1410	3.5	
90	2810	19.70	1070	1.25	
102	2470	17.33	1070	1.45	JRTFA49DN100L4
108	2330	16.36	1060	1.50	JRTFAF49DN100L4
127	1990	13.93	1040	1.80	JRTF49DN100L4
139	1810	12.66	1030	1.95	JRTFF49DN100L4
161	1560	10.97	1010	2.3	
197	1280	8.96	950	2.3	
159	1580	11.08	540	1.05	
169	1490	10.42	540	1.10	
197	1280	8.97	545	1.20	
220	1140	8.01	540	1.30	JRTFA39DN100L4
262	960	6.74	515	1.30	JRTFAF39DN100L4
291	860	6.05	510	1.40	JRTF39DN100L4
338	745	5.21	505	1.50	JRTFF39DN100L4
360	700	4.90	500	1.50	
418	600	4.22	490	1.60	
468	535	3.77	485	1.70	

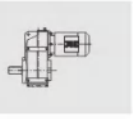



Output speed n_a [r/min]	Output torque T_a lbf · in	Ratio i	Permitted overhung load F_{Ra} [1] lbf	Service factor f_B	Model
3.0HP					
317	790	11.08	525	2.1	
337	745	10.42	520	2.2	
392	640	8.97	510	2.4	
439	570	8.01	500	2.6	JRTFA39DN100L2
522	480	6.74	475	2.6	JRTFAF39DN100L2
581	430	6.05	465	2.8	JRTF39DN100L2
675	370	5.21	450	3.0	JRTFF39DN100L2
718	350	4.90	445	3.0	
834	300	4.22	430	3.2	
933	270	3.77	420	3.4	
5.0HP					
1.9	155400	953	22800	1.00	
2.1	137000	845	24000	1.15	
2.3	123300	764	24800	1.30	
2.6	109700	680	25500	1.45	JRTFA159R99DN100L4
3.0	92100	576	26200	1.75	JRTFAF159R99DN100L4
3.9	72400	446	26900	2.2	JRTF159R99DN100L4
5.8	49000	302	27000	3.2	JRTFF159R99DN100L4
6.4	44100	273	27000	3.6	
7.6	37000	232	27000	4.3	
8.9	31400	197	27000	5.1	
3.6	78600	483	20200	1.35	
4.2	68500	418	20200	1.55	JRTFA129R89DN100L4
4.7	61100	374	20200	1.75	JRTFAF129R89DN100L4
5.6	51000	312	20200	2.1	JRTF129R89DN100L4
6.0	47700	293	20200	2.2	JRTFF129R89DN100L4
6.8	42000	259	20200	2.5	
7.9	36300	223	20200	2.9	
2.7	107900	648	20200	1.00	JRTFA129R79DN100L4
3.2	91400	549	20200	1.15	JRTFAF129R79DN100L4
3.5	82300	495	20200	1.30	JRTF129R79DN100L4
4.1	71200	428	20200	1.50	JRTFF129R79DN100L4
4.7	62400	376	20200	1.70	
4.8	61500	370	11600	1.10	
5.3	55400	333	12000	1.25	JRTFA109R79DN100L4
6.0	48400	291	12400	1.40	JRTFAF109R79DN100L4
6.9	42400	255	12800	1.60	JRTF109R79DN100L4
7.8	37300	225	13000	1.80	JRTFF109R79DN100L4
9.2	31600	190	13300	2.1	
4.5	65200	387	11400	1.05	JRTFA109R79DN100L4
5.2	57100	340	11900	1.20	JRTFAF109R79DN100L4
5.9	50300	300	12300	1.40	JRTF109R79DN100L4
6.6	44500	266	12600	1.55	JRTFF109R79DN100L4
8.4	34700	208	6960	1.10	JRTFA99R59DN100L4 JRTFAF99R59DN100L4
9.0	32500	195	7110	1.15	JRTF99R59DN100L4 JRTFF99R59DN100L4
6.9	45500	254.40	12600	1.50	
8.2	38500	215.37	13000	1.75	
8.8	35700	199.31	13100	1.90	JRTFA109DN100L4
9.8	32000	178.64	13300	2.1	JRTFAF109DN100L4
11	28900	161.28	13500	2.4	JRTF109DN100L4 JRTFF109DN100L4
12	26200	146.49	13600	2.6	
14	23200	129.97	13700	2.9	
9.3	34000	189.92	7010	1.10	JRTFA99DN100L4
10	31300	174.87	7190	1.20	JRTFAF99DN100L4
11	28000	156.30	7400	1.35	JRTF99DN100L4
12	25200	140.71	7560	1.50	JRTFF99DN100L4

Output speed n_a [r/min]	Output torque T_a lbf · in	Ratio i	Permitted overhung load F_{Ra} [1] lbf	Service factor f_B	Model
5.0HP					
14	22800	127.42	7690	1.65	
16	20200	112.99	7830	1.90	
17	18300	102.16	7920	2.1	JRTFA99DN100L4
18	17400	97.58	7960	2.2	JRTFAF99DN100L4
20	16100	89.85	8030	2.4	JRTF99DN100L4
20	15500	86.59	8050	2.5	JRTFF99DN100L4
22	14300	80.31	8100	2.6	
24	12900	72.29	8160	2.9	
13	24000	134.16	5400	1.10	
14	22000	123.29	5580	1.20	
16	19600	109.49	5660	1.35	
18	17500	97.89	5590	1.50	JRTFA89DN100L4
20	15700	88.01	5510	1.70	JRTFAF89DN100L4
23	13600	76.39	5390	1.95	JRTF89DN100L4
26	12200	68.40	5280	2.2	JRTFF89DN100L4
31	10100	56.75	5100	2.6	
35	9020	50.36	4970	2.9	
23	13400	75.05	3500	1.00	
24	12900	72.50	3580	1.00	
26	11900	66.46	3750	1.10	
30	10400	58.32	3940	1.25	
32	9900	55.27	4000	1.35	JRTFA79DN100L4
36	8660	48.37	4130	1.55	JRTFAF79DN100L4
40	7800	43.58	4210	1.70	JRTF79DN100L4
46	6850	38.23	4280	1.95	JRTFF79DN100L4
52	6040	33.74	4340	2.2	
59	5350	29.91	4380	2.5	
69	4570	25.54	4420	2.8	
48	6550	36.58	4300	1.50	
56	5640	31.51	4360	2.2	JRTFA79DN100L4
61	5150	28.75	4390	2.5	JRTFAF79DN100L4
69	4560	25.50	4420	2.9	JRTF79DN100L4
82	3840	21.43	4450	3.5	JRTFF79DN100L4
45	7030	39.26	2370	1.00	JRTFA69DN100L4
52	6090	34.01	2550	1.05	JRTFAF69DN100L4 JRTF69DN100L4 JRTFF69DN100L4
55	5740	32.08	2610	1.25	
64	4910	27.41	2730	1.50	
70	4500	25.13	2780	1.60	
80	3950	22.05	2840	1.85	JRTFA69DN100L4
84	3740	20.90	2860	1.95	JRTFAF69DN100L4
96	3270	18.29	2900	2.2	JRTF69DN100L4
107	2950	16.48	2920	2.5	JRTFF69DN100L4
122	2590	14.46	2920	2.8	
194	1620	9.08	2790	2.9	
70	4470	24.96	1510	1.15	
83	3790	21.17	1490	1.40	
92	3420	19.11	1480	1.55	
105	3010	16.81	1460	1.75	
111	2840	15.88	1450	1.85	JRTFA59DN100L4
130	2420	13.52	1410	2.2	JRTFAF59DN100L4
143	2200	12.29	1390	2.4	JRTF59DN100L4
165	1900	10.64	1350	2.8	JRTFF59DN100L4
189	1660	9.31	1290	2.2	
215	1460	8.19	1260	2.5	
227	1380	7.73	1240	2.7	

Output speed n_a [r/min]	Output torque T_a lbf · in	Ratio i	Permitted overhung load F_{Ra} [1)] lbf	Service factor f_B	Model
5.0HP					
89	3520	19.70	950	1.00	
101	3100	17.33	960	1.15	
107	2930	16.36	960	1.20	
126	2490	13.93	960	1.40	
139	2260	12.66	950	1.55	JRTFA49DN100L4
160	1960	10.97	940	1.80	JRTFAF49DN100L4
196	1600	8.96	890	1.80	JRTF49DN100L4
223	1410	7.88	80	2.4	JRTFF49DN100L4
236	1330	7.44	870	2.5	
278	1130	6.34	850	2.7	
305	1030	5.76	840	2.9	
219	1430	8.01	480	1.05	
261	1200	6.74	460	1.05	JRTFA39DN100L4
291	1080	6.05	460	1.10	JRTFAF39DN100L4
337	930	5.21	460	1.20	JRTF39DN100L4
359	870	4.90	460	1.20	JRTFF39DN100L4
417	755	4.22	455	1.30	
467	675	3.77	455	1.40	
438	715	8.01	470	2.1	
521	605	6.74	445	2.0	
580	540	6.05	440	2.2	JRTFA39DN100L2
673	465	5.21	430	2.4	JRTFAF39DN100L2
716	440	4.90	425	2.4	JRTF39DN100L2
832	375	4.22	415	2.6	JRTFF39DN100L2
931	335	3.77	405	2.8	
5.4HP					
2.1	147400	845	23400	1.10	
2.3	132700	764	24300	1.20	
2.6	118000	680	25100	1.35	JRTFA159R99DN112M4
3.1	99300	576	25900	1.60	JRTFAF159R99DN112M4
4.0	77900	446	26700	2.0	JRTF159R99DN112M4
5.8	52700	302	27000	3.0	JRTFF159R99DN112M4
6.5	47400	273	27000	3.4	
7.6	39900	232	27000	4.0	
9.0	33800	197	20200	4.7	
3.7	84600	483	20200	1.25	
4.2	73600	418	20200	1.45	
4.7	65700	374	20200	1.60	JRTFA129R89DN112M4
5.7	54800	312	20200	1.95	JRTFAF129R89DN112M4
6.0	51300	293	20200	2.1	JRTF129R89DN112M4
6.8	45200	259	20200	2.3	JRTFF129R89DN112M4
7.9	39100	223	20200	2.7	
3.2	98200	549	20200	1.10	JRTFA129R79DN112M4
3.6	88400	495	20200	1.20	JRTFAF129R79DN112M4
4.1	76500	428	20200	1.40	JRTF129R79DN112M4
4.7	67000	376	20200	1.60	JRTFF129R79DN112M4
4.8	66100	370	11300	1.05	
5.3	59500	333	11700	1.15	JRTFA109R79DN112M4
6.1	52000	291	12200	1.30	JRTFAF109R79DN112M4
6.9	45500	255	12600	1.50	JRTF109R79DN112M4
7.8	40100	225	12900	1.70	JRTFF109R79DN112M4
9.3	33900	190	13200	2.0	
5.2	61400	340	11600	1.15	JRTFA109R79DN112M4
5.9	54100	300	12100	1.30	JRTFAF109R79DN112M4
6.7	47800	266	12400	1.45	JRTF109R79DN112M4
					JRTFF109R79DN112M4
8.5	37300	208	6770	1.00	JRTFA99R59DN112M4
9.1	34900	195	6940	1.10	JRTFAF99R59DN112M4
					JRTF99R59DN112M4
					JRTFF99R59DN112M4

Output speed n_a [r/min]	Output torque T_a lbf · in	Ratio i	Permitted overhung load F_{Ra} [1)] lbf	Service factor f_B	Model
5.4HP					
7.0	48900	254.40	12400	1.40	
8.2	41400	215.37	12800	1.65	
8.9	38300	199.31	13000	1.75	
9.9	34300	178.64	13200	2.0	JRTFA109DN112M4
11	31000	161.28	13400	2.2	JRTFAF109DN112M4
12	28100	146.49	13500	2.4	JRTF109DN112M4
14	24900	129.97	13600	2.7	JRTFF109DN112M4
15	22600	117.94	13800	3.0	
17	19400	101.38	13900	3.5	
9.3	36500	189.92	6830	1.05	
10	33600	174.87	7040	1.15	
11	30000	156.30	7270	1.25	
13	27000	140.71	7460	1.40	
14	24500	127.42	7600	1.55	
16	21700	112.99	7750	1.75	JRTFA99DN112M4
17	19600	102.16	7860	1.95	JRTFAF99DN112M4
18	18700	97.58	7900	2.0	JRTF99DN112M4
20	17200	89.85	7970	2.2	JRTFF99DN112M4
20	16600	86.59	8000	2.3	
22	15400	80.31	8060	2.5	
24	13900	72.29	8120	2.7	
27	12500	65.47	8030	3.0	
13	25800	134.16	5100	1.05	
14	23700	123.29	5430	1.10	
16	21000	109.49	5510	1.25	
18	18800	97.89	5450	1.40	JRTFA89DN112M4
20	16900	88.01	5380	1.55	JRTFAF89DN112M4
23	14600	76.39	5270	1.80	JRTF89DN112M4
26	13100	68.40	5180	2.0	JRTFF89DN112M4
31	10900	56.75	5010	2.4	
35	9680	50.36	4900	2.7	
39	8700	45.28	4790	2.9	
27	12700	66.46	3610	1.05	
30	11200	58.32	3840	1.20	
32	10600	55.27	3920	1.25	
37	9300	48.37	4070	1.45	JRTFA79DN112M4
41	8380	43.58	4160	1.60	JRTFAF79DN112M4
46	7350	38.23	4250	1.80	JRTF79DN112M4
52	6480	33.74	4310	2.0	JRTFF79DN112M4
59	5750	29.91	4360	2.3	
69	4910	25.54	4400	2.6	
56	6050	31.51	4340	2.0	
62	5530	28.75	4370	2.3	JRTFA79DN112M4
69	4900	25.50	4400	2.7	JRTFAF79DN112M4
83	4120	21.43	4440	3.2	JRTF79DN112M4
90	3780	19.70	4450	3.5	JRTFF79DN112M4
52	6450	34.01	2470	1.00	JRTFA69DN112M4
					JRTFAF69DN112M4
					JRTF69DN112M4
					JRTFF69DN112M4
65	5270	27.41	2680	1.40	
70	4830	25.13	2740	1.50	
80	4240	22.05	2810	1.70	
85	4010	20.90	2830	1.80	JRTFA69DN112M4
97	3510	18.29	2880	2.1	JRTFAF69DN112M4
107	3160	16.48	2910	2.3	JRTF69DN112M4
122	2780	14.46	2920	2.6	JRTFF69DN112M4
139	2450	12.76	2920	3.0	
156	2170	11.31	2920	3.3	

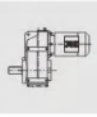



Output speed n_a [r/min]	Output torque T_a lbf · in	Ratio i	Permitted overhung load F_{Ra} [1] lbf	Service factor f_B	Model
5.4HP					
183	1850	9.66	2850	3.9	
195	1740	9.08	2770	2.7	
206	1650	8.60	2730	3.0	
235	1440	7.53	2640	3.7	JRTFA69DN112M4 JRTFAF69DN112M4 JRTF69DN112M4 JRTFF69DN112M4
261	1300	6.78	2580	4.2	
297	1140	5.95	2490	4.7	
337	1000	5.25	2420	5.2	
380	890	4.66	2340	5.5	
445	760	3.97	2250	5.8	
84	4070	21.17	1450	1.30	
93	3670	19.11	1440	1.45	
105	3230	16.81	1420	1.65	
111	3050	15.88	1410	1.75	
131	2590	13.52	1380	2.0	
144	2360	12.29	1360	2.2	JRTFA59DN112M4 JRTFAF59DN112M4 JRTF59DN112M4 JRTFF59DN112M4
166	2040	10.64	1330	2.6	
190	1790	9.31	1270	2.1	
216	1570	8.19	1240	2.4	
229	1480	7.73	1220	2.5	
269	1260	6.58	1180	2.9	
296	1150	5.98	1160	3.2	
341	990	5.18	1120	3.7	
382	890	9.31	1090	4.2	
434	780	8.19	1060	4.7	JRTFA59DN112M2 JRTFAF59DN112M2 JRTF59DN112M2 JRTFF59DN112M2
459	740	7.73	1040	5.0	
539	630	6.58	1000	5.9	
594	570	5.98	980	6.5	
685	495	5.18	940	7.4	
7.5HP					
3.1	139900	576	23900	1.15	
3.5	121500	503	24900	1.30	
4.0	109400	446	25500	1.45	
5.0	85000	353	26500	1.85	JRTFA159R99DN132S4
5.8	74000	302	26800	2.1	JRTFAF159R99DN132S4
6.5	66700	273	27000	2.4	JRTF159R99DN132S4
7.6	56200	232	27000	2.8	JRTFF159R99DN132S4
8.7	48800	202	27000	3.3	
9.0	47700	197	20700	3.3	
4.2	103100	418	20200	1.05	
4.7	92100	374	20200	1.15	
5.7	76800	312	20200	1.40	JRTFA129R89DN132S4
6.0	72000	293	20200	1.45	JRTFAF129R89DN132S4
6.8	63500	259	20200	1.65	JRTF129R89DN132S4
7.9	54800	223	20200	1.95	JRTFF129R89DN132S4
8.9	48500	198	20200	2.2	
11	40700	166	20200	2.6	
4.1	106700	428	20200	1.00	JRTFA129R79DN132S4 JRTFAF129R79DN132S4
4.7	93500	376	20200	1.15	JRTF129R79DN132S4 JRTFF129R79DN132S4
6.9	63600	256	11500	1.05	JRTFA109R79DN132S4
7.8	56000	225	12000	1.20	JRTFAF109R79DN132S4
9.3	47400	190	12500	1.45	JRTF109R79DN132S4 JRTFF109R79DN132S4
6.7	66800	266	11300	1.05	JRTFA109R79DN132S4 JRTFAF109R79DN132S4 JRTF109R79DN132S4 JRTFF109R79DN132S4
10	45600	170.83	20200	2.3	JRTFA129DN132S4 JRTFAF129DN132S4 JRTF129DN132S4
12	4100	153.67	20200	2.6	JRTFF129DN132S4

Output speed n_a [r/min]	Output torque T_a lbf · in	Ratio i	Permitted overhung load F_{Ra} [1] lbf	Service factor f_B	Model
7.5HP					
7.0	67900	254.40	11200	1.00	
8.2	57500	215.37	11900	1.20	
8.9	53200	199.31	12100	1.30	
9.9	47700	178.64	12500	1.40	
11	43100	161.28	12700	1.60	JRTFA109DN132S4
12	39100	146.49	12900	1.75	JRTFAF109DN132S4
14	34700	129.97	13200	1.95	JRTF109DN132S4
15	31500	117.94	13300	2.2	JRTFF109DN132S4
17	27000	101.38	13500	2.5	
19	24700	92.47	13700	2.8	
20	23600	88.49	13700	2.9	
21	22400	83.99	13800	3.0	
13	37600	140.71	6750	1.00	
14	34000	127.42	7010	1.10	
16	30200	112.99	7260	1.25	
17	27300	102.16	7440	1.40	
18	26000	97.58	7510	1.45	JRTFA99DN132S4
20	24000	89.85	7630	1.60	JRTFAF99DN132S4
20	23100	86.59	7680	1.65	JRTF99DN132S4
22	21400	80.31	7770	1.75	JRTFF99DN132S4
23	20200	75.63	7810	1.90	
24	19300	72.29	7740	1.95	
27	17400	65.47	7600	2.2	
30	15500	58.06	7420	2.5	
34	14000	52.49	7260	2.7	
41	11500	43.28	6950	2.4	JRTFA99DN132S4 JRTFAF99DN132S4 JRTF99DN132S4
48	9790	36.64	6670	2.8	JRTFF99DN132S4
18	26100	97.89	4730	1.00	
20	23500	88.01	4730	1.15	
23	20400	76.39	4710	1.30	
26	18200	68.40	4680	1.45	JRTFA89DN132S4
31	15100	56.75	4600	1.75	JRTFAF89DN132S4
35	13400	50.36	4530	1.95	JRTF89DN132S4 JRTFF89DN132S4
39	12100	45.28	4460	2.1	
45	10500	39.30	4350	2.3	
50	9400	35.19	4270	2.5	
61	7800	29.20	4110	2.9	
52	9060	33.92	4240	2.5	JRTFA89DN132S4
61	7690	28.76	4100	2.8	JRTFAF89DN132S4
67	7080	26.50	4020	3.8	JRTF89DN132S4 JRTFF89DN132S4
75	6320	23.68	3930	4.2	
37	12900	48.37	3590	1.05	
41	11600	43.58	3780	1.15	JRTFA79DN132S4
46	10200	38.23	3970	1.30	JRTFAF79DN132S4
52	9010	33.74	4100	1.45	JRTF79DN132S4 JRTFF79DN132S4
59	7990	29.91	4190	1.65	
69	6820	25.54	4280	1.90	
69	6810	25.50	4290	1.95	
82	5720	21.43	4360	2.3	
90	5260	19.70	4380	2.5	JRTFA79DN132S4
101	4670	17.49	4330	2.8	JRTFAF79DN132S4 JRTF79DN132S4
113	4180	15.64	4220	3.2	JRTFF79DN132S4
126	3750	14.06	4110	3.5	
145	3260	12.20	3970	4.1	
80	5890	22.05	2580	1.25	JRTFA69DN132S4
85	5580	20.90	2630	1.30	JRTFAF69DN132S4 JRTF69DN132S4
97	4880	18.29	2730	1.50	JRTFF69DN132S4

Output speed n_a [r/min]	Output torque T_a lbf · in	Ratio i	Permitted overhung load F_{Ra} [1] lbf	Service factor f_B	Model
7.5HP					
107	4400	16.48	2790	1.65	
122	3860	14.46	2850	1.90	
139	3400	12.76	2890	2.1	
156	3020	11.31	2860	2.4	
183	2580	9.66	2770	2.8	
195	2420	9.08	2670	1.95	JRTFA69DN132S4
206	2290	8.60	2640	2.2	JRTFAF69DN132S4
235	2010	7.53	2560	2.7	JRTF69DN132S4
261	1810	6.78	2500	3.0	JRTFF69DN132S4
297	1590	5.95	24300	3.4	
337	1400	5.25	2360	3.7	
380	1240	4.66	2290	4.0	
445	1060	3.97	2200	4.2	
105	4490	16.81	1230	1.20	
111	4240	15.88	1230	1.25	
131	3610	13.52	1230	1.45	
144	3280	12.29	1220	1.60	JRTFA59DN132S4
166	2840	10.64	1210	1.85	JRTFAF59DN132S4
216	2180	8.19	1130	1.70	JRTF59DN132S4
229	2060	7.73	1130	1.80	JRTFF59DN132S4
269	1750	6.58	1100	2.1	
295	1590	5.98	1080	2.3	
341	1380	5.18	1060	2.6	
433	1090	8.19	1010	3.4	JRTFA59DN132S2
458	1030	7.73	1000	3.4	JRTFAF59DN132S2
538	870	6.58	960	4.2	JRTF59DN132S2
592	795	5.98	940	4.7	JRTFF59DN132S2
684	690	5.18	910	5.3	
10.0HP					
4.0	146300	446	23400	1.10	
5.0	114200	353	25300	1.40	JRTFA159R99DN132M4
5.9	99000	302	25900	1.60	JRTFAF159R99DN132M4
6.5	89300	273	26300	1.80	JRTF159R99DN132M4
7.7	75400	232	26800	2.1	JRTFF159R99DN132M4
8.8	65500	202	27000	2.4	
9.0	63900	197	27000	2.5	
5.7	102600	312	20200	1.05	
6.0	96200	293	20200	1.10	JRTFA129R89DN132M4
6.9	84900	259	20200	1.25	JRTFAF129R89DN132M4
7.9	73300	223	20200	1.45	JRTF129R89DN132M4
9.0	64800	198	20200	1.65	JRTFF129R89DN132M4
11	54500	166	20200	1.95	
9.3	63100	190	11500	1.10	JRTFA109R79DN132M4 JRTFAF109R79DN132M4 JRTF109R79DN132M4 JRTFF109R79DN132M4
4.4	142500	267.43	23700	1.10	
5.4	116000	217.62	25200	1.35	
6.6	94900	178.20	26100	1.70	
7.2	86800	162.96	26400	1.85	
8.3	75500	141.80	26800	2.1	
9.4	66700	125.14	27000	2.4	JRTFA159DN160M6
11	57800	108.49	27000	2.8	JRTFAF159DN160M6
12	51400	96.53	27000	3.1	JRTF159DN160M6
14	45700	85.80	27000	3.5	JRTFF159DN160M6
15	41800	78.46	27000	3.8	
17	36300	68.28	27000	4.4	
20	32100	60.25	26400	5.0	
23	27800	52.24	25400	5.7	

Output speed n_a [r/min]	Output torque T_a lbf · in	Ratio i	Permitted overhung load F_{Ra} [1] lbf	Service factor f_B	Model
10.0HP					
6.9	91000	170.83	20200	1.15	JRTFA129DN160M6
7.7	81900	153.67	20200	1.30	JRTFAF129DN160M6
9.4	66800	125.37	20200	1.60	JRTF129DN160M6
10	60900	114.34	20200	1.75	JRTFF129DN160M6
10	60600	170.83	20200	1.75	JRTFA129DN132M4
12	54500	153.67	20200	1.95	JRTFAF129DN132M4
14	44500	125.37	20200	2.4	JRTF129DN132M4
16	40600	114.34	20200	2.6	JRTFF129DN132M4
9.9	63400	178.64	11500	1.05	
11	57200	161.28	11900	1.20	
12	52000	146.49	12200	1.30	
14	46100	129.97	12500	1.45	JRTFA109DN132M4
15	41800	117.94	12800	1.60	JRTFAF109DN132M4
18	36000	101.38	13100	1.90	JRTF109DN132M4
19	32800	92.47	13300	2.1	JRTFF109DN132M4
20	31400	88.49	13300	2.2	
21	29800	83.99	13400	2.3	
24	26400	74.52	13600	2.6	
26	24000	67.62	13300	2.8	
17	36200	102.16	6850	1.05	
18	24600	97.58	6960	1.10	
20	31900	89.85	7150	1.20	
20	30700	86.59	7230	1.25	
22	28500	80.31	7250	1.35	
23	26800	75.63	7200	1.40	JRTFA99DN132M4 JRTFAF99DN132M4
25	25600	72.29	7170	1.50	JRTF99DN132M4
27	23200	65.47	7080	1.65	JRTFF99DN132M4
31	20600	58.06	6950	1.85	
34	18600	52.49	6840	2.0	
40	15800	44.49	6630	2.4	
46	13800	38.86	6460	2.8	
55	11500	32.50	6210	3.3	
41	15300	43.28	6600	1.75	JRTFA99DN132M4
48	13000	36.64	6380	2.1	JRTFAF99DN132M4
52	12000	33.91	6270	3.2	JRTF99DN132M4
58	10700	30.39	6120	3.5	JRTFF99DN132M4
26	24200	68.40	4080	1.10	
31	20100	56.75	4100	1.30	JRTFA89DN132M4
35	17800	50.36	4080	1.45	JRTFAF89DN132M4
39	16000	45.28	4060	1.55	JRTF89DN132M4
45	13900	39.30	4010	1.70	JRTFF89DN132M4
50	12400	35.19	3960	1.85	
61	10300	29.20	3850	2.1	
52	12000	33.92	3940	1.90	
62	10200	28.78	3840	2.1	
67	9410	26.50	3790	2.8	JRTFA89DN132M4
75	8410	23.68	3720	3.2	JRTFAF89DN132M4
83	7570	21.32	3640	3.5	JRTF89DN132M4
92	6850	19.31	3570	3.9	JRTFF89DN132M4
104	6080	17.12	3480	4.4	
115	5490	15.48	3400	4.8	
53	11900	33.74	3740	1.10	JRTFA79DN132M4 JRTFAF79DN132M4
59	10600	29.91	3920	1.25	JRTF79DN132M4
69	9060	25.54	4090	1.40	JRTFF79DN132M4



Output speed n_a [r/min]	Output torque T_a lbf · in	Ratio i	Permitted overhung load F_{Ra} [1] lbf	Service factor f_B	Model
10.0HP					
70	9050	25.50	4090	1.45	
83	7610	21.43	4220	1.75	
90	6990	19.70	4270	1.90	
101	6210	17.49	4180	2.1	
113	5550	15.64	4080	2.4	
126	4990	14.06	3990	2.7	JRTFA79DN132M4
145	4330	12.20	3870	3.1	JRTFAF79DN132M4
162	3880	10.93	3770	3.4	JRTF79DN132M4
191	3300	9.30	3550	2.9	JRTFF79DN132M4
215	2930	8.26	3450	3.3	
240	2620	7.39	3360	3.6	
267	2350	6.64	3280	4.0	
308	2040	5.76	3170	4.7	
344	1830	5.16	3080	5.2	
414	1520	4.28	2940	5.9	
97	6490	18.29	2480	1.10	
108	5850	16.48	2590	1.25	
123	5130	14.46	2700	1.40	
139	4530	12.76	2780	1.60	
157	4010	11.31	2740	1.80	JRTFA69DN132M4
184	3420	9.66	2660	2.1	JRTFAF69DN132M4
195	3220	9.08	2550	1.45	JRTF69DN132M4
206	3050	8.60	2520	1.65	JRTFF69DN132M4
236	2670	7.53	2460	2.0	
262	2400	6.78	2410	2.3	
298	2110	5.95	2350	2.5	
338	1680	5.25	2290	2.8	
381	1650	4.66	2230	3.0	
131	4800	13.52	1050	1.10	
144	4360	12.29	1060	1.20	
167	3770	10.64	1070	1.40	JRTFA59DN132M4
217	2900	8.19	1010	1.30	JRTFAF59DN132M4
229	2740	7.73	1010	1.35	JRTF59DN132M4
269	2330	6.58	1000	1.60	JRTFF59DN132M4
296	2120	5.98	990	1.75	
342	1840	5.18	980	2.0	
433	1450	8.19	950	2.5	JRTFA59DN132M2
458	1370	7.73	940	2.7	JRTFAF59DN132M2
538	1170	6.58	910	3.2	JRTF59DN132M2
592	1060	5.98	890	3.5	JRTFF59DN132M2
684	920	5.18	870	4.0	
12.3HP					
5.0	141200	353	23800	1.15	
5.9	122200	302	24900	1.30	JRTFA159R99DN132L4
6.5	110300	273	25500	1.45	JRTFAF159R99DN132L4
7.7	93100	232	26200	1.70	JRTF159R99DN132L4
8.8	81000	202	26600	1.95	JRTFF159R99DN132L4
9.0	79000	197	26700	2.0	
6.9	104700	259	20200	1.00	JRTFA129R89DN132L4
8.0	90400	223	20200	1.15	JRTFAF129R89DN132L4
9.0	80000	198	20200	1.35	JRTF129R89DN132L4
11	67200	166	20200	1.60	JRTFF129R89DN132L4
6.6	116700	267.43	25100	1.35	
8.2	95000	217.62	26100	1.70	JRTFA159DN132L4
10.0	77800	178.20	26700	2.0	JRTFAF159DN132L4
11	71100	162.96	26900	2.2	JRTF159DN132L4
13	61900	141.80	27000	2.6	JRTFF159DN132L4
14	54600	125.14	27000	2.9	

Output speed n_a [r/min]	Output torque T_a lbf · in	Ratio i	Permitted overhung load F_{Ra} [1] lbf	Service factor f_B	Model
12.3HP					
10	74500	170.83	20200	1.40	
12	67000	153.67	20200	1.60	JRTFA129DN132L4
14	54700	125.37	20200	1.95	JRTFAF129DN132L4
16	49900	114.34	20200	2.1	JRTF129DN132L4
18	43200	98.95	20200	2.5	JRTFF129DN132L4
20	38100	87.31	20100	2.8	
12	63900	146.49	11500	1.05	
14	56700	129.97	11900	1.20	
15	51400	117.94	12200	1.30	
18	44200	101.38	12700	1.55	JRTFA109DN132L4
19	40300	92.47	12900	1.70	JRTFAF109DN132L4
20	38600	88.49	13000	1.75	JRTF109DN132L4
21	36600	83.99	13100	1.85	JRTFF109DN132L4
24	32500	74.52	13200	2.1	
26	29500	67.62	13000	2.3	
31	25300	58.12	12600	2.7	
35	22100	50.73	12200	3.1	
20	37800	86.59	6670	1.00	
22	35000	80.31	6670	1.10	
23	33000	75.63	6650	1.15	
25	31500	72.29	6640	1.20	JRTFA99DN132L4
27	28500	65.47	6600	1.35	JRTFAF99DN132L4
31	25300	58.06	6530	1.50	JRTF99DN132L4
34	22900	52.49	6450	1.65	JRTFF99DN132L4
40	19400	44.49	6310	1.95	
46	16900	38.86	6170	2.2	
55	14100	32.50	5980	2.7	
52	14800	33.91	6030	2.6	JRTFA99DN132L4
58	13200	30.39	5900	2.9	JRTFAF99DN132L4
65	11900	27.44	5780	3.2	JRTF99DN132L4
71	10800	24.92	5660	3.5	JRTFF99DN132L4
31	24700	56.75	3640	1.05	
35	21900	50.36	3680	1.20	JRTFA89DN132L4
39	19700	45.28	3700	1.25	JRTFAF89DN132L4
45	17100	39.30	3690	1.40	JRTF89DN132L4
50	15300	35.19	3670	1.50	JRTFF89DN132L4
61	12700	29.20	3620	1.75	
67	11500	26.50	3580	2.3	
75	10300	23.68	3530	2.6	
83	9300	21.32	3470	2.9	JRTFA89DN132L4
92	8420	19.31	3410	3.1	JRTFAF89DN132L4
104	7470	17.12	3340	3.5	JRTF89DN132L4
115	6750	15.48	3280	3.9	JRTFF89DN132L4
135	5720	13.12	3170	4.6	
59	13000	29.91	3570	1.00	JRTFA79DN132L4
70	11100	25.54	3850	1.15	JRTFAF79DN132L4
					JRTF79DN132L4
					JRTFF79DN132L4
90	8600	19.70	4130	1.55	
101	7630	17.49	4050	1.75	
113	6820	15.64	3960	1.95	
126	6130	14.06	3880	2.2	
145	5320	12.20	3770	2.5	
162	4770	10.93	3690	2.8	JRTFA79DN132L4
191	4060	9.30	3460	2.4	JRTFAF79DN132L4
215	3600	8.26	3370	2.6	JRTF79DN132L4
240	3220	7.39	3290	3.0	JRTFF79DN132L4
267	2890	6.64	3210	3.3	
308	2510	5.76	3110	3.8	
344	2250	5.16	3030	4.2	
415	1860	4.28	2900	4.8	

Output speed n_a [r/min]	Output torque T_a lbf · in	Ratio i	Permitted overhung load F_{Ra} [1] lbf	Service factor f_B	Model
15.0HP					
5.9	149400	302	23200	1.05	JRTFA159R99DN160M4
6.5	134800	273	24200	1.20	JRTFAF159R99DN160M4
7.7	114000	232	25300	1.40	JRTF159R99DN160M4
8.8	99200	202	25900	1.60	JRTFF159R99DN160M4
9.0	96600	197	26000	1.65	
9.0	97800	198	20200	1.10	JRTFA129R89DN160M4 JRTFAF129R89DN160M4
11	82100	166	20200	1.30	JRTF129R89DN160M4 JRTFF129R89DN160M4
6.6	142300	267.43	23700	1.10	
8.2	115800	217.62	25200	1.40	
10.0	94800	178.20	26100	1.70	
11	86700	162.96	26400	1.85	
13	75400	141.80	26800	2.1	JRTFA159DN160M4 JRTFAF159DN160M4
14	66500	125.14	27000	2.4	JRTF159DN160M4 JRTFF159DN160M4
16	57700	108.49	26600	2.8	
18	51300	96.53	25900	3.1	
21	45600	85.80	25200	3.5	
23	41700	78.46	24700	3.8	
26	36300	68.28	23900	4.4	
33	28400	53.55	22500	2.5	JRTFA159DN160M4 JRTFAF159DN160M4 JRTF159DN160M4 JRTFF159DN160M4
10	90900	170.83	20200	1.15	
12	81700	153.67	20200	1.30	
14	66700	125.37	20200	1.60	
16	60800	114.34	20200	1.75	JRTFA129DN160M4 JRTFAF129DN160M4
18	52600	98.95	20100	2.0	JRTF129DN160M4 JRTFF129DN160M4
20	46400	87.31	19600	2.3	
24	40100	75.41	19000	2.6	
25	37200	70.07	18700	2.9	
14	69100	129.97	11100	1.00	
15	62700	117.94	11500	1.10	
18	53900	101.38	12100	1.25	
19	49200	92.47	12400	1.40	JRTFA109DN160M4
20	47000	88.49	12500	1.45	JRTFAF109DN160M4
21	44600	83.99	12600	1.50	JRTF109DN160M4
24	39600	74.52	12700	1.70	JRTFF109DN160M4
26	35900	67.62	12500	1.90	
31	30900	58.12	12200	2.2	
35	26900	50.73	11900	2.5	
41	22800	43.03	11500	3.0	JRTFA109DN160M4
53	17900	33.79	10900	3.6	JRTFAF109DN160M4
64	14600	27.57	10400	4.7	JRTF109DN160M4
71	13300	25.14	10200	5.2	JRTFF109DN160M4
25	38400	72.29	6020	1.00	
27	34800	65.47	6040	1.10	
31	30800	58.06	6030	1.25	JRTFA99DN160M4 JRTFAF99DN160M4
34	27900	52.49	6010	1.35	JRTF99DN160M4
40	23600	44.49	5930	1.60	JRTFF99DN160M4
46	20600	38.86	5840	1.85	
55	17200	32.50	5700	2.2	
52	18000	33.91	5740	2.1	
58	16100	30.39	5640	2.4	JRTFA99DN160M4 JRTFAF99DN160M4
65	14600	27.44	5540	2.6	JRTF99DN160M4
71	13200	24.92	5450	3.9	JRTFF99DN160M4
80	11700	22.11	5320	3.2	

Output speed n_a [r/min]	Output torque T_a lbf · in	Ratio i	Permitted overhung load F_{Ra} [1] lbf	Service factor f_B	Model
15.0HP					
39	24000	45.28	3270	1.05	JRTFA89DN160M4
45	20900	39.30	3320	1.15	JRTFAF89DN160M4
50	18700	35.19	3340	1.25	JRTF89DN160M4
61	15500	29.20	3340	1.45	JRTFF89DN160M4
67	14000	26.50	3330	1.90	
75	12600	23.68	3300	2.1	
83	11300	21.32	3270	2.3	JRTFA89DN160M4 JRTFAF89DN160M4
92	10200	19.31	3230	2.6	JRTF89DN160M4
104	9110	17.12	3180	2.9	JRTFF89DN160M4
115	8230	15.48	3130	3.2	
135	6980	13.12	3040	3.8	
90	10400	19.70	3940	1.25	
102	9300	17.49	3890	1.45	
114	8320	15.64	3820	1.60	
126	7480	14.06	3760	1.75	
146	6490	12.20	3670	2.0	JRTFA79DN160M4
163	5810	10.93	3590	2.3	JRTFAF79DN160M4
191	4940	9.30	3350	1.95	JRTF79DN160M4
215	4390	8.26	3280	2.2	JRTFF79DN160M4
240	3920	7.39	3210	2.4	
267	3530	6.64	3140	2.7	
308	3060	5.76	3050	3.1	
344	2740	5.16	2970	3.5	
415	2270	4.28	2850	3.9	
20HP					
7.7	152500	232	23000	1.05	JRTFA159R99DN160L4
8.8	132900	202	24300	1.20	JRTFAF159R99DN160L4
9.1	129400	197	24500	1.25	JRTF159R99DN160L4 JRTFF159R99DN160L4
8.2	154300	217.62	22900	1.05	
10.0	126300	178.20	24600	1.25	
11	115500	162.96	25200	1.40	
13	100500	141.80	25900	1.60	JRTFA159DN160L4
14	88700	125.14	26300	1.80	JRTFAF159DN160L4
16	76900	108.49	25700	2.1	JRTF159DN160L4
18	68400	96.53	25100	2.3	JRTFF159DN160L4
21	60800	85.80	24500	2.6	
23	55600	78.46	24000	2.9	
26	48400	68.28	23300	3.3	
29	42700	60.25	22600	3.7	
33	37900	53.55	22000	1.85	JRTFA159DN160L4 JRTFAF159DN160L4
40	31100	43.94	21000	2.8	JRTF159DN160L4 JRTFF159DN160L4
14	88900	125.37	19700	1.20	
16	81000	114.34	19500	1.30	
18	70100	98.95	19100	1.50	JRTFA129DN160L4
20	61900	87.31	18700	1.70	JRTFAF129DN160L4
24	53400	75.41	18200	2.0	JRTF129DN160L4
25	49600	70.07	18000	2.1	JRTFF129DN160L4
28	45300	63.91	17700	2.3	
32	39200	55.31	17200	2.7	
19	65500	92.47	11400	1.05	
20	62700	88.49	11500	1.10	
21	59500	83.99	11700	1.15	
24	52800	74.52	11800	1.30	JRTFA109DN160L4
26	47900	67.62	11700	1.40	JRTFAF109DN160L4
31	41200	58.12	11500	1.65	JRTF109DN160L4
35	35900	50.73	11300	1.90	JRTFF109DN160L4
41	30500	43.03	11000	2.2	
47	26600	37.61	10700	2.5	
56	22500	31.80	10400	3.0	

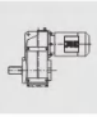



Output speed n_a [r/min]	Output torque T_a lbf · in	Ratio i	Permitted overhung load F_{Ra} [1] lbf	Service factor f_B	Model
20HP					
53	23900	33.79	10500	2.7	JRTFA109DN160L4
64	19500	27.57	10100	3.5	JRTFAF109DN160L4
71	17800	25.14	9900	3.9	JRTF109DN160L4
82	15400	21.76	9590	4.5	JRTFF109DN160L4
34	37200	52.49	5180	1.00	JRTFA99DN160L4
40	31500	44.49	5230	1.20	JRTFAF99DN160L4
46	27500	38.86	5230	1.40	JRTF99DN160L4
55	23000	32.50	5190	1.65	JRTFF99DN160L4
52	24000	33.91	5200	1.60	
58	21500	30.39	5160	1.75	
65	19400	27.44	5110	1.95	
71	17600	24.92	5050	2.1	JRTFA99DN160L4
80	15600	22.11	4970	2.4	JRTFAF99DN160L4
89	14200	20.07	4900	2.7	JRTF99DN160L4
103	12200	17.25	4770	3.1	JRTFF99DN160L4
118	10600	15.06	4650	3.6	
139	9050	12.77	4500	4.2	
159	7910	11.16	4360	4.6	
61	20700	29.20	2840	1.05	JRTFA89DN160L4 JRTFAF89DN160L4 JRTF89DN160L4 JRTFF89DN160L4
67	18700	26.50	2870	1.40	
75	16700	23.68	2890	1.60	
83	15100	21.32	2900	1.75	
92	13600	19.31	2900	1.95	
104	12100	17.12	2880	2.2	
115	10900	15.48	2860	2.4	
135	9300	13.12	2810	2.9	JRTFA89DN160L4
155	8120	11.46	2770	3.3	JRTFAF89DN160L4
185	6790	9.58	2690	3.8	JRTF89DN160L4
214	5870	8.29	2560	2.3	JRTFF89DN160L4
242	5210	7.35	2510	2.6	
267	4710	6.65	2460	2.9	
315	3990	5.63	2380	3.4	
361	3480	4.92	2310	3.9	
432	2910	4.12	2220	4.4	
25HP					
9.1	161800	197	22300	1.00	JRTFA159R99DN180M4 JRTFAF159R99DN180M4 JRTF159R99DN180M4 JRTFF159R99DN180M4
10.0	157600	178.20	22700	1.00	
11	144100	162.96	23600	1.10	
13	125400	141.80	24700	1.25	
14	110600	125.14	25200	1.45	
16	95900	108.49	24700	1.65	JRTFA159DN180M4
18	85300	96.53	24200	1.85	JRTFAF159DN180M4
21	75800	85.80	23700	2.1	JRTF159DN180M4
23	69300	78.46	23300	2.3	JRTFF159DN180M4
26	60300	68.28	22600	2.6	
30	53200	60.25	22100	3.0	
34	46100	52.24	21400	3.5	
41	38800	43.94	20600	2.3	JRTFA159DN180M4 JRTFAF159DN180M4 JRTF159DN180M4 JRTFF159DN180M4
16	101100	114.34	18200	1.05	JRTFA129DN180M4
18	87500	98.95	18000	1.20	JRTFAF129DN180M4
20	77200	87.31	17800	1.35	JRTF129DN180M4
24	66600	75.41	17400	1.60	JRTFF129DN180M4

Output speed n_a [r/min]	Output torque T_a lbf · in	Ratio i	Permitted overhung load F_{Ra} [1] lbf	Service factor f_B	Model
25HP					
25	61900	70.07	17300	1.70	JRTFA129DN180M4
28	56500	63.91	17000	1.90	JRTFAF129DN180M4
32	48900	55.31	16600	2.2	JRTF129DN180M4
36	43100	48.80	16200	2.5	JRTFF129DN180M4
42	37200	42.15	15800	2.9	
24	65900	74.52	10900	1.05	
26	59800	67.62	10900	1.15	
31	51400	58.12	10800	1.30	JRTFA109DN180M4
35	44800	50.73	10700	1.50	JRTFAF109DN180M4
41	38000	43.03	10500	1.80	JRTF109DN180M4
47	33200	37.61	10300	2.0	JRTFF109DN180M4
56	28100	31.80	10000	2.4	
53	29800	33.79	10100	2.2	JRTFA109DN180M4
65	24300	27.57	9760	2.8	JRTFAF109DN180M4
71	22200	25.14	9600	3.1	JRTF109DN180M4
82	19200	21.76	9330	3.6	JRTFF109DN180M4
46	34300	38.86	4620	1.10	JRTFA99DN180M4 JRTFAF99DN180M4
55	28700	32.50	4670	1.30	JRTF99DN180M4 JRTFF99DN180M4
65	24200	27.44	4670	1.55	
71	22000	24.92	4660	1.75	
81	19500	22.11	4620	1.95	
89	17700	20.07	4580	2.1	JRTFA99DN180M4
103	15200	17.25	4500	2.5	JRTFAF99DN180M4
118	13300	15.06	4410	2.9	JRTF99DN180M4
139	11200	12.77	4290	3.4	JRTFF99DN180M4
160	9870	11.16	4190	3.7	
197	8010	9.06	3910	2.6	
217	7270	8.22	3840	2.9	
84	18800	21.32	2530	1.40	
92	17000	19.31	2560	1.55	
104	15100	17.12	2580	1.75	
115	13600	15.48	2590	1.95	
136	11600	13.12	2590	2.3	
155	10100	11.46	2570	2.6	JRTFA89DN180M4
186	8470	9.58	2520	3.0	JRTFAF89DN180M4
215	7330	8.29	2400	1.85	JRTF89DN180M4
242	6500	7.35	2370	2.1	JRTFF89DN180M4
268	5870	6.65	2330	2.3	
316	4980	5.63	2270	2.7	
362	4350	4.92	2210	3.1	
433	3630	4.12	2140	3.5	
30HP					
13	150400	141.80	23200	1.05	
14	132800	125.14	24100	1.20	
16	115100	108.49	23700	1.40	
18	102400	96.53	23300	1.55	
21	91000	85.80	22900	1.75	JRTFA159DN180L4
23	83200	78.46	22600	1.90	JRTFAF159DN180L4
26	72400	68.28	22000	2.2	JRTF159DN180L4
30	63900	60.25	21500	2.5	JRTFF159DN180L4
34	55400	52.24	20900	2.9	
38	49300	46.48	20400	3.2	
44	42500	40.06	19700	3.8	
55	34500	32.55	18800	4.6	
41	46600	43.94	20200	1.90	JRTFA159DN180L4 JRTFAF159DN180L4
50	37900	35.75	19200	2.6	JRTF159DN180L4 JRTFF159DN180L4

Output speed n_a [r/min]	Output torque T_a lbf · in	Ratio i	Permitted overhung load F_{Ra} [1)] lbf	Service factor f_B	Model
30HP					
18	105000	98.95	17000	1.00	
20	92600	87.31	16900	1.15	
24	80000	75.41	16700	1.35	JRTFA129DN180L4
25	74300	70.07	16500	1.45	JRTFAF129DN180L4
28	67800	63.91	16300	1.55	JRTF129DN180L4
32	58600	55.31	16000	1.80	JRTFF129DN180L4
36	51700	48.80	15700	2.0	
42	447000	42.15	15300	2.4	
48	39500	37.28	15000	2.7	
66	28500	26.86	14000	2.6	JRTFA129DN180L4 JRTFAF129DN180L4 JRTF129DN180L4 JRTFF129DN180L4
72	26000	24.57	13700	2.9	
31	61600	58.12	10100	1.10	
35	53800	50.73	10100	1.25	JRTFA109DN180L4 JRTFAF109DN180L4 JRTF109DN180L4 JRTFF109DN180L4
41	45600	43.03	9960	1.50	
47	39900	37.61	9830	1.70	
56	33700	31.80	9630	2.0	
53	35800	33.79	9710	1.85	
65	29200	27.57	9430	2.4	JRTFA109DN180L4 JRTFAF109DN180L4 JRTF109DN180L4 JRTFF109DN180L4
71	26600	25.14	9300	2.6	
82	23000	21.76	9070	3.0	
93	20300	19.20	8860	3.4	
55	34400	32.50	4160	1.10	JRTFA99DN180L4 JRTFAF99DN180L4 JRTF99DN180L4 JRTFF99DN180L4
65	29100	27.44	4240	1.30	
71	26400	24.92	4260	1.45	
81	23400	22.11	4270	1.60	
89	21200	20.07	4260	1.80	
103	18300	17.25	4230	2.1	JRTFA99DN180L4 JRTFAF99DN180L4 JRTF99DN180L4 JRTFF99DN180L4
118	15900	15.06	4170	2.4	
139	13500	12.77	4090	2.8	
160	11800	11.16	4010	3.1	
197	9610	9.06	3750	2.2	
217	8720	8.22	3690	2.4	
252	7500	7.07	3590	2.8	
84	22600	21.32	2160	1.15	
92	20400	19.31	2230	1.30	
104	18100	17.12	2290	1.45	
115	16400	15.48	2320	1.60	
136	13900	13.12	2360	1.90	JRTFA89DN180L4 JRTFAF89DN180L4 JRTF89DN180L4 JRTFF89DN180L4
155	12100	11.46	2370	2.2	
186	10100	9.58	2360	2.5	
215	8790	8.29	2240	1.55	
242	7800	7.35	2230	1.75	
268	7050	6.65	2210	1.90	
316	5970	5.63	2160	2.3	
362	5220	4.92	2120	2.6	
433	4360	4.12	2060	3.0	
40HP					
16	153300	108.49	21800	1.05	
18	136400	96.53	21600	1.15	JRTFA159DN200L4 JRTFAF159DN200L4 JRTF159DN200L4 JRTFF159DN200L4
21	121200	85.80	21400	1.30	
23	110900	78.46	21200	1.45	
16	96500	68.28	20800	1.65	
30	85100	60.25	20400	1.85	

Output speed n_a [r/min]	Output torque T_a lbf · in	Ratio i	Permitted overhung load F_{Ra} [1)] lbf	Service factor f_B	Model
40HP					
34	73800	52.24	20000	2.2	JRTFA159DN200L4 JRTFAF159DN200L4 JRTF159DN200L4 JRTFF159DN200L4
38	65600	46.48	19600	2.4	
45	56600	40.06	19000	2.8	
50	50500	35.75	18600	1.95	JRTFA159DN200L4 JRTFAF159DN200L4 JRTF159DN200L4 JRTFF159DN200L4
24	106500	75.41	15100	1.00	
25	99000	70.07	15100	1.05	
28	90300	63.91	15000	1.20	
32	78100	55.31	14900	1.35	JRTFA129DN200L4 JRTFAF129DN200L4 JRTF129DN200L4 JRTFF129DN200L4
37	68900	48.80	14700	1.55	
42	59500	42.15	14400	1.80	
48	52600	37.28	14200	2.0	
57	44200	31.33	13800	2.4	
70	35700	25.30	13300	3.0	
66	37900	26.86	13400	2.0	JRTFA129DN200L4 JRTFAF129DN200L4 JRTF129DN200L4 JRTFF129DN200L4
73	34700	24.57	13200	2.2	
83	30200	21.38	12900	3.5	
95	26600	18.87	12500	3.6	
41	60800	43.03	8930	1.10	JRTFA109DN200L4 JRTFAF109DN200L4 JRTF109DN200L4 JRTFF109DN200L4
47	53100	37.61	8930	1.30	
56	44900	31.80	8870	1.50	
65	38900	27.57	8770	1.80	
71	35500	25.14	8700	1.95	
82	30700	21.76	8550	2.3	JRTFA109DN200L4 JRTFAF109DN200L4 JRTF109DN200L4 JRTFF109DN200L4
93	27100	19.20	8400	2.6	
108	23400	16.58	8210	3.0	
122	20700	14.67	8040	3.3	
145	17400	12.33	7780	3.5	
179	14000	9.96	7450	4.1	
81	31200	22.11	3580	1.20	
89	28300	20.07	3630	1.35	
103	24300	17.25	3680	1.55	
118	21200	15.06	3700	1.80	
140	18000	12.77	3690	2.1	JRTFA99DN200L4 JRTFAF99DN200L4 JRTF99DN200L4 JRTFF99DN200L4
160	15700	11.16	3660	2.3	
197	12800	9.06	3420	1.65	
217	11600	8.22	3390	1.80	
252	9990	7.07	3330	2.1	
289	8720	6.17	3270	2.3	
341	7390	5.23	3180	2.6	
390	6460	4.57	3100	2.8	
461	5460	3.87	3000	2.9	
50HP					
21	151400	85.80	19800	1.05	
23	138400	78.46	19800	1.15	
26	120400	68.28	19600	1.30	
30	106300	60.25	19400	1.50	JRTFA159DN225S4 JRTFAF159DN225S4 JRTF159DN225S4 JRTFF159DN225S4
34	92100	52.24	19000	1.75	
38	82000	46.48	18700	1.95	
45	70600	40.06	18300	2.2	
55	57400	32.55	17700	2.8	
65	48700	27.60	17100	3.3	
50	63000	35.75	18000	1.55	JRTFA159DN225S4 JRTFAF159DN225S4 JRTF159DN225S4 JRTFF159DN225S4
62	50400	28.60	17200	3.0	
70	44800	25.43	16800	3.0	

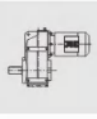



Output speed n_a [r/min]	Output torque T_a lbf · in	Ratio i	Permitted overhung load F_{Ra} [1] lbf	Service factor f_B	Model
50HP					
32	97600	55.31	13700	1.10	
37	86100	48.80	13700	1.25	JRTFA129DN225S4
42	74300	42.15	13500	1.45	JRTFAF129DN225S4
48	65700	37.28	13400	1.60	JRTF129DN225S4
57	55200	31.33	13200	1.90	JRTFF129DN225S4
71	44600	25.30	12800	2.4	
66	47400	26.86	12900	1.60	
73	43300	24.57	12700	1.75	
84	37700	21.38	12400	2.8	
95	33200	18.87	12100	2.9	JRTFA129DN225S4
109	28800	16.36	11800	3.4	JRTFAF129DN225S4
123	25600	14.55	11500	3.8	JRTF129DN225S4
142	22100	12.54	11200	4.0	JRTFF129DN225S4
175	17900	10.19	10700	4.7	
201	15600	8.86	10300	4.0	
226	13900	7.88	9980	3.8	
47	66300	37.61	8030	1.00	JRTFA109DN225S4
56	56100	31.80	8110	1.20	JRTFAF109DN225S4 JRTF109DN225S4 JRTF109DN225S4
65	48600	27.57	8120	1.45	
71	44300	25.14	8100	1.55	
82	38400	21.76	8030	1.80	
93	33800	19.20	7940	2.0	
108	29200	16.58	7810	2.4	JRTFA109DN225S4
122	25800	14.67	7690	2.6	JRTFAF109DN225S4
145	21700	12.33	7490	2.9	JRTF109DN225S4
179	17500	9.96	7210	3.3	JRTF109DN225S4
184	17100	9.69	7050	2.5	
213	14700	8.37	6870	2.9	
241	13000	7.40	6710	3.1	
287	10900	6.22	6470	3.7	
89	35400	20.07	3000	1.05	
103	30400	17.25	3140	1.25	
119	26500	15.06	3230	1.45	
140	22500	12.77	3290	1.70	
160	19600	11.16	3310	1.85	JRTFA99DN225S4
197	15900	9.06	3100	1.30	JRTFAF99DN225S4
217	14500	8.22	3100	1.45	JRTF99DN225S4
253	12400	7.07	3080	1.65	JRT99DN225S4
289	10800	6.17	3050	1.85	
341	9230	5.23	3000	2.1	
390	8070	4.57	2940	2.2	
462	6820	3.87	2860	2.3	
60HP					
26	144500	68.28	18400	1.10	
30	127600	60.25	18300	1.25	
34	110600	52.24	18100	1.45	JRTFA159DN225M4
38	98400	46.48	17900	1.60	JRTFAF159DN225M4
45	84800	40.06	17600	1.90	JRTF159DN225M4
55	68900	32.55	17100	2.3	JRT159DN225M4
65	58400	27.60	16600	2.7	
50	75700	35.75	17300	1.30	JRTFA159DN225M4
62	60500	28.60	16700	2.5	JRTFAF159DN225M4
70	53800	25.43	16400	2.5	JRTF159DN225M4 JRT159DN225M4

Output speed n_a [r/min]	Output torque T_a lbf · in	Ratio i	Permitted overhung load F_{Ra} [1] lbf	Service factor f_B	Model
60HP					
37	103300	48.80	12400	1.05	JRTFA129DN225M4
42	89200	42.15	12700	1.20	JRTFAF129DN225M4
48	78900	37.28	12600	1.35	JRTF129DN225M4
57	66300	31.33	12500	1.60	JRT129DN225M4
71	53500	25.30	12200	2.0	
66	56800	26.86	12300	1.30	
73	52000	24.57	12200	1.45	
84	45200	21.38	12000	2.4	
95	39900	18.87	11700	2.4	
109	34600	16.36	11500	2.8	JRTFA129DN225M4
123	30800	14.55	11200	3.2	JRTFAF129DN225M4
142	26500	12.54	10900	3.3	JRTF129DN225M4
175	21500	10.19	10500	3.9	JRT129DN225M4
201	18700	8.86	10100	3.3	
226	16600	7.88	9800	3.2	
263	14300	6.80	9470	4.3	
323	11600	5.52	9020	4.5	
56	67300	31.80	7250	1.00	JRTFA109DN225M4 JRTFAF109DN225M4 JRTF109DN225M4 JRT109DN225M4
65	58300	27.57	7460	1.20	
71	53200	25.14	7500	1.30	
82	46000	21.76	7510	1.50	
93	40600	19.20	7480	1.70	
108	35100	16.58	7420	2.0	JRTFA109DN225M4
122	31000	14.67	7340	2.2	JRTFAF109DN225M4
145	26100	12.33	7190	2.4	JRTF109DN225M4
179	21000	9.96	6980	2.7	JRT109DN225M4
184	20500	9.69	6800	2.1	
213	17700	8.37	6650	2.4	
241	15600	7.40	6510	2.6	
287	13100	6.22	6310	3.1	
75HP					
30	159500	6025	16700	1.00	
34	138200	52.24	16700	1.15	JRTFA159DN250M4
38	123000	46.48	16700	1.30	JRTFAF159DN250M4
45	106000	40.06	16500	1.50	JRTF159DN250M4
55	86100	32.55	16200	1.85	JRTFF159DN250M4
65	73000	27.60	15900	2.2	
62	75700	28.60	15900	2.0	JRTFA159DN250M4
70	67300	25.43	15700	1.95	JRTFAF159DN250M4
81	58600	22.16	15400	2.7	JRTF159DN250M4
90	52300	19.77	15100	2.9	JRTFF159DN250M4
106	44600	16.85	14600	3.6	
48	98600	37.28	11100	1.10	JRTFA129DN250M4
57	82900	31.33	11500	1.30	JRTFAF129DN250M4
71	66900	25.30	11400	1.60	JRTF129DN250M4 JRTFF129DN250M4
84	56500	21.38	11300	1.90	
95	49900	18.87	11200	1.95	
109	43200	16.36	11000	2.2	
123	38500	14.55	10800	2.5	
142	33200	12.54	10500	2.7	JRTFA129DN250M4
175	26900	10.19	10100	3.1	JRTFAF129DN250M4
201	23400	8.86	9760	2.6	JRTF129DN250M4
226	20800	7.88	9540	2.5	JRTFF129DN250M4
263	17900	6.80	9250	3.4	
323	14600	5.52	8830	3.6	
381	12300	4.68	8500	4.3	

Output speed n_a [r/min]	Output torque T_a lbf · in	Ratio i	Permitted overhung load F_{Ra} [1)] lbf	Service factor f_B	Model
100HP					
45	141300	40.06	14700	1.15	JRTFA159DN280S4 JRTFAF159DN280S4
55	114800	32.55	14700	1.40	JRTF159DN280S4
65	97400	27.60	14600	1.65	JRTFF159DN280S4
62	100900	28.60	14700	1.50	
70	88700	25.43	14600	1.50	JRTFA159DN280S4
81	78200	22.16	14400	2.0	JRTFAF159DN280S4
90	69700	19.77	14200	2.2	JRTF159DN280S4
106	59400	16.85	13900	2.7	JRTFF159DN280S4
128	49200	13.96	13500	3.0	
150	42000	11.92	13100	3.4	
71	89300	25.30	9770	1.20	JRTFA129DN280S4 JRTFAF129DN280S4 JRTF129DN280S4 JRTFF129DN280S4
84	75400	21.38	10100	1.40	
95	66500	18.87	10200	1.45	
109	57700	16.36	10100	1.70	
123	51300	14.55	10000	1.90	JRTFA129DN280S4
142	44200	12.54	9860	2.0	JRTFAF129DN280S4
175	35900	10.19	9600	2.3	JRTF129DN280S4
201	31200	8.86	9260	2.0	JRTFF129DN280S4
226	27800	7.88	9100	1.90	
263	23900	6.80	8870	2.6	
323	19400	5.52	8520	2.7	
381	16500	4.68	8240	3.2	
125HP					
55	143600	32.55	13300	1.10	JRTFA159DN280M4 JRTFAF159DN280M4
65	121800	27.60	13400	1.30	JRTF159DN280M4 JRTFF159DN280M4
62	126200	28.60	13400	1.20	JRTFA159DN280M4 JRTFAF159DN280M4 JRTF159DN280M4 JRTFF159DN280M4
70	112200	25.43	13400	1.20	
81	97800	22.16	13400	1.60	JRTFA159DN280M4
90	87200	19.77	13300	1.70	JRTFAF159DN280M4
106	74300	16.85	13100	2.1	JRTF159DN280M4
128	61600	13.96	12800	2.4	JRTFF159DN280M4
150	52600	11.92	12600	2.7	
83	94300	21.38	8380	1.15	JRTFA129DN280M4 JRTFAF129DN280M4 JRTF129DN280M4 JRTFF129DN280M4
95	83200	18.87	8800	1.15	
109	72200	16.36	9130	1.35	
123	64200	14.55	9250	1.50	
142	55300	12.54	9200	1.60	JRTFA129DN280M4
175	44900	10.19	9070	1.85	JRTFAF129DN280M4
201	39100	8.86	8770	1.60	JRTF129DN280M4
226	34800	7.88	8660	1.55	JRTFF129DN280M4
263	29900	6.80	8490	2.1	
323	24300	5.52	8220	2.2	
381	20600	4.68	7980	2.6	
150HP					
65	145700	27.60	12200	1.10	JRTFA159DN315S4 JRTFAF159DN315S4 JRTF159DN315S4 JRTFF159DN315S4
81	116900	22.16	12400	1.35	JRTFA159DN315S4 JRTFAF159DN315S4 JRTF159DN315S4 JRTFF159DN315S4

Output speed n_a [r/min]	Output torque T_a lbf · in	Ratio i	Permitted overhung load F_{Ra} [1)] lbf	Service factor f_B	Model
150HP					
91	104300	19.77	12400	1.45	JRTFA159DN315S4
106	88900	16.85	12400	1.80	JRTFAF159DN315S4
128	73700	13.96	12200	2.0	JRTF159DN315S4
150	62900	11.92	12000	2.2	JRTFF159DN315S4
175HP					
81	136400	22.16	11400	1.15	JRTFA159DN315M4 JRTFAF159DN315M4
91	121700	19.77	11500	1.25	JRTF159DN315M4 JRTFF159DN315M4
106	103700	16.85	11600	1.55	JRTFA159DN315M4
128	85900	13.96	11600	1.75	JRTFAF159DN315M4 JRTF159DN315M4
150	73300	11.92	11500	1.95	JRTFF159DN315M4
200HP					
106	118700	16.85	10900	1.35	JRTFA159DN315L4
128	98400	13.96	11000	1.55	JRTFAF159DN315L4 JRTF159DN315L4
150	83900	11.92	11000	1.70	JRTFF159DN315L4
225HP					
106	133600	16.85	10100	1.20	JRTFA159DN315L4
128	110700	13.96	10300	1.35	JRTFAF159DN315L4 JRTF159DN315L4
150	94400	11.92	10400	1.50	JRTFF159DN315L4
250HP					
106	148100	16.85	9360	1.10	JRTFA159DN315H4 JRTFAF159DN315H4 JRTF159DN315H4 JRTFF159DN315H4
128	122700	13.96	9720	1.25	JRTFA159DN315H4 JRTFAF159DN315H4
150	104700	11.92	9890	1.35	JRTF159DN315H4 JRTFF159DN315H4
275HP					
106	163000	16.85	8600	1.00	JRTFA159DN315H4 JRTFAF159DN315H4 JRTF159DN315H4 JRTFF159DN315H4
128	135000	13.96	9100	1.10	JRTFA159DN315H4 JRTFAF159DN315H4
150	115200	11.92	9360	1.25	JRTF159DN315H4 JRTFF159DN315H4
300HP					
128	147400	13.96	8470	1.00	JRTFA159DN315H4 JRTFAF159DN315H4
150	125800	11.92	8830	1.15	JRTF159DN315H4 JRTFF159DN315H4



6. Features size table

JRTF39..~JRTF159..

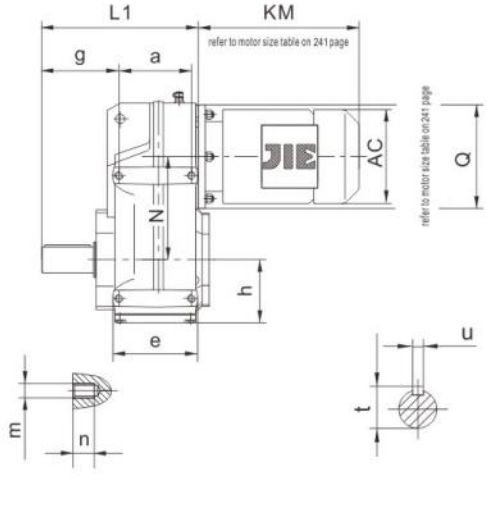

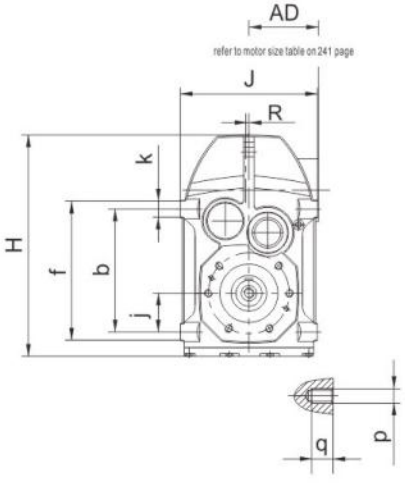

JRTFA39B..~JRTFA159B..

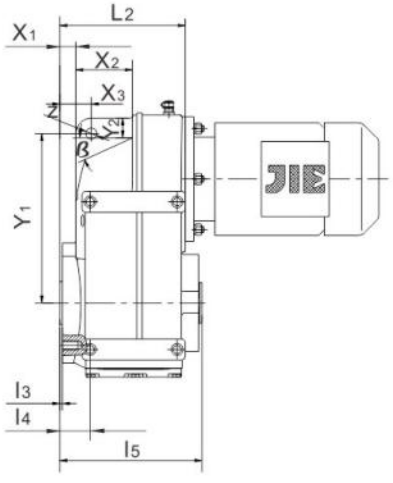

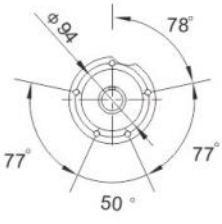

JRTF39..

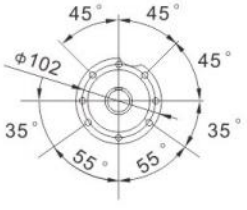

JRTF49..

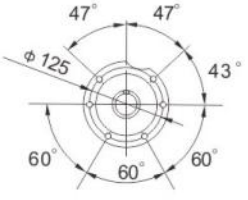

JRTF59..、JRTF69..

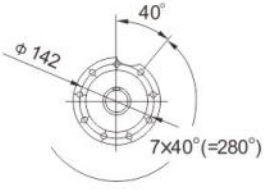

JRTF79..

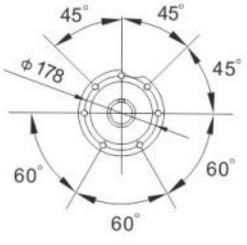

JRTF89..

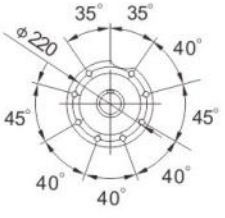

JRTF99..

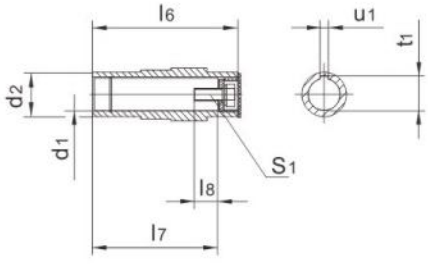

JRTFA..39B/G..~JRTFA..159B/G..

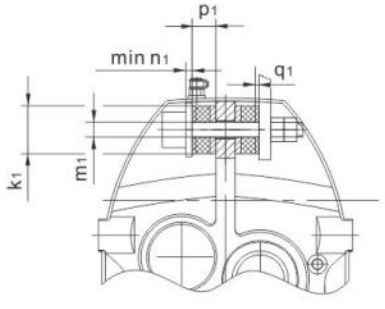

Model	a b	e f	g h	j	L_1 L_2	K R	m n	p q	Shaft dimension				
									d	l	l_1 l_2	s	t u
JRTF39..	77	96	72.5	31	160	20	M8	M8	Φ1.000in-0.0005	50	0.33in	D3/8-16x0.86in	1.11in
JRTFA39B..	115	135	73.5		110	0	11	11			1.31in		0.250in
JRTF49..	93	111	91	43	193	20	M8	M10	Φ1.250in-0.0005	60	0.28in	D1/2-13x1.15in	1.11in
JRTFA49B..	145	165	77.5		133	0	11	15			1.69in		0.250in
JRTF59..	102	127	104.5	55	221	25	M12	M12	Φ1.375in-0.0005	70	0.47in	D1/2-13x1.15in	1.11in
JRTFA59B..	170	195	92.5		150	0	17	17			1.81in		0.250in
JRTF69..	112	133	118.5	60	242	25	M12	M12	Φ1.625in-0.001	80	0.45in	D5/8-11x1.37in	1.79in
JRTFA69B..	190	215	95.5		161	0	17	17			2.25in		0.375in
JRTF79..	140	171	137.5	70	294	35	M12	M16	Φ2.000in-0.001	100	0.66in	D3/4-10x1.61in	2.22in
JRTFA79B..	240	275	115.5		193	0	17	26			2.63in		0.500in
JRTF89..	165	195	163	100	344	40	M16	M16	Φ2.375in-0.001	120	0.55in	D3/4-10x1.61in	2.65in
JRTFA89B..	310	350	145.5		224	0	26	26			3.63in		0.625in
JRTF99..	205	242	190.5	120	416	50	M16	M20	Φ2.875in-0.001	140	0.69in	D3/4-10x1.61in	3.20in
JRTFA99B..	350	400	173.5		274	0	26	28			4.13in		0.750in
JRTF109..	220	260	241.5	125	484	60	/	M24	Φ3.625in-0.001	170	0.66in	D1-8x2.15in	4.01in
JRTFA109B..	400	460	200		312	0		36			5.38in		0.875in
JRTF129..	270	316	291	142	585	70	/	M30	Φ4.375in-0.001	210	1.13in	D1-8x2.15in	4.82in
JRTFA129B.	450	520	236		373	10		45			6.00in		1.000in
JRTF159..	310	364	325	170	662	80	/	M36	Φ4.750in-0.001	210	0.85in	D1-8x2.15in	5.29in
JRTFA159B...	540	620	286		455	15		55			6.56in		1.250in

Model	Hollow shaft dimension								H J	N Q	X_1 X_2 X_3	Y_1 Y_2	z ß	torque arm form	
	d_1	d_2	l_3 l_4	l_5	l_6 l_7	l_8	s_1	t_1 u_1						k_1 m_1 n_1	p_1 q_1
JRTF39..	Φ1.250inH7	45	2.5	123	120	0.68in	7/16-14x1.00in	1.37in	252	112	11	158	14	40	20
JRTFA39B..			22.5		105			0.250in	165	120	47.5 31.5	26	29	12.5 5	1
JRTF49..	Φ1.375inH7	50	3	153	150	0.63in	1/2-13x1.00in	1.53in	269	128.1	11	170	14	40	20
JRTFA49B..			31		132			0.3155in	180	120	58 31	22	26	12.5 5	1.8
JRTF59..	Φ1.500inH7	55	3	170	166	1.39in	5/8-11x1.75in	1.67in	317	136	19	198	14	40	20
JRTFA59B..			33.5		142			0.375in	200	160	60 41	23	28	12.5 5	2.4
JRTF69..	Φ1.500inH7	55	3.5	184	180	1.4in	5/8-11x1.75in	1.67in	343	159.5	20.5	218	14	40	20
JRTFA69B..			37		156			0.375in	212	160	73 40.5	26	24	12.5 5	3
JRTF79..	Φ2.000inH7	70	4	213	210	1.19in	5/8-11x1.75in	2.24in	426	200	20	278	22	60	30
JRTFA79B..			36.5		183			0.500in	270	200	80 50	39	25	21 10	3.2
JRTF89..	Φ2.375inH7	85	4	243	240	1.42in	3/4-10x2.00in	2.67in	531	246.7	19	346	22	60	30
JRTFA89B..			43		210			0.625in	330	250	95 62	41	26	21 10	4.5
JRTF99..	Φ2.750inH7	95	4	303	300	1.28in	3/4-10x2.00in	3.05in	623	285	28	395	26	80	40
JRTFA99B..			48.5		270			0.625in	400	300	110 70	57	29	25 12	5
JRTF109..	Φ3.625inH7	118	2.5	353	350	1.27in	3/4-10x2.00in	3.89in	717	332.4	57	485	26	80	40
JRTFA109B..			69.5		313			0.875in	450	350	100 86	108	25	25 12	6
JRTF129..	Φ4.000inH7	135	2.5	413	410	1.27in	1-8x2.25in	4.46in	856	382.6	66	550	33	100	60
JRTFA129B.			79.25		373			1.000in	530	450	125 110	138	25	32 15	9
JRTF159..	Φ4.500inH7	155	7	503	500	1.02in	1-8x2.25in	4.95in	1021	447	98	660	33	120	60
JRTFA159B...			118		460			1.000in	660	550	140 150	170	25	32 15	9

JRTFH39B..~JRTFH159B..

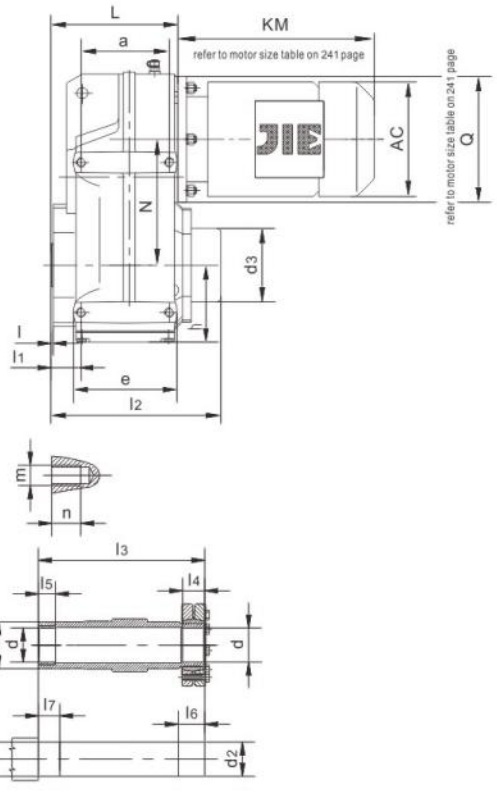

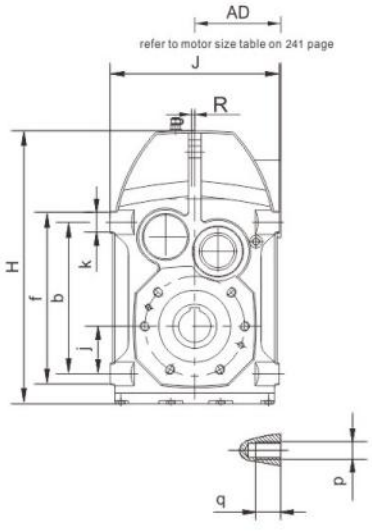

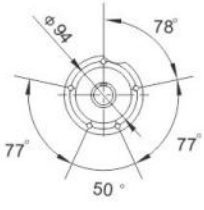

JRTF..39B..

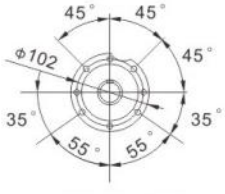

JRTF..49B..

JRTFV39B..~JRTFV109B..

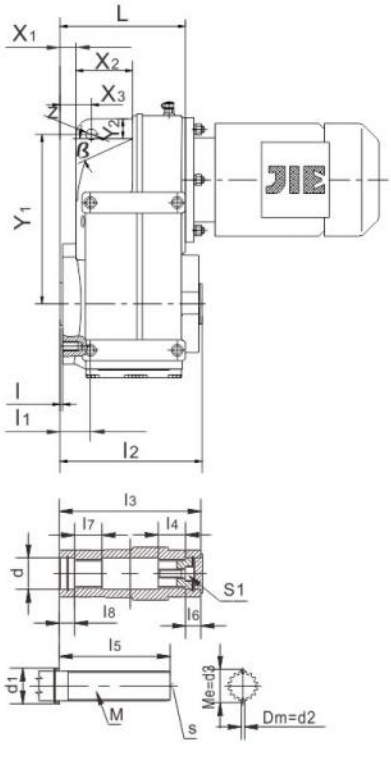

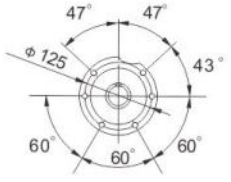

JRTF..59B.. JRTF..69B..

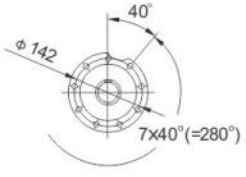

JRTF..79B..

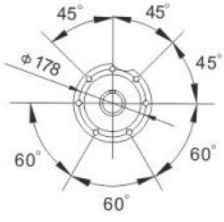

JRTF..89B..

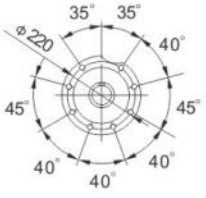

JRTF..99B..

JRTF..39B/G..~JRTF..159B/G..

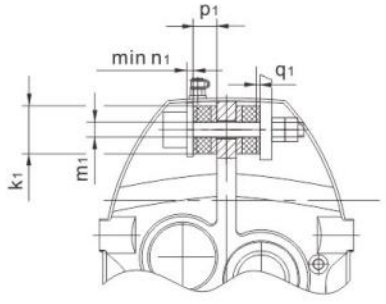

Model	a b	e f	h j	L	K R	m n	p q	d	d_1	d_2	d_3	l	s
JRTFH39B..	77	96	73.5	110	20	M8	M8	30H7	45	30h6	80	2.5	M10
JRTFV39B..	115	135	31		0	11	11	$37_{0}^{+0.1}$	≥42	2.75	$33.03_{-0.03}^{0}$		
JRTFH49B..	93	111	77.5	133	20	M8	M10	35H7	50	35h6	88	3	M10
JRTFV49B..	145	165	43		0	11	15	$37_{0}^{+0.1}$	≥42	4	$38.92_{-0.03}^{0}$		
JRTFH59B..	102	127	92.5	150	25	M12	M12	40H7	55	40h6	100	3	M10
JRTFV59B..	170	195	55		0	17	17	$37_{0}^{+0.1}$	≥42	4	$38.92_{-0.03}^{0}$		
JRTFH69B..	112	133	95.5	161	25	M12	M12	40H7	55	40h6	100	3.5	M16
JRTFV69B..	190	215	60		0	17	17	$47_{0}^{+0.1}$	≥52	4	$48.85_{-0.03}^{0}$		
JRTFH79B..	140	171	115.5	193	35	M12	M16	50H7	70	50h6	124	4	M16
JRTFV79B..	240	275	70		0	17	26	$57_{0}^{+0.1}$	≥62	4	$54.13_{-0.03}^{0}$		
JRTFH89B..	165	195	145.5	224	40	M16	M16	65H7	85	65h6	165	4	M20
JRTFV89B..	310	350	100		0	26	26	$72_{0}^{+0.1}$	≥82	4	$68.96_{-0.04}^{0}$		
JRTFH99B..	205	242	173.5	274	50	M16	M20	75H7	95	75h6	200	4	M20
JRTFV99B..	350	400	120		0	26	28	$72_{0}^{+0.1}$	≥90	4	$74.15_{-0.04}^{0}$		
JRTFH109B..	220	260	200	312	60	–	M24	95H7	118	95h6	196	2.5	M20
JRTFV109B..	400	460	125		0		36	$90_{0}^{+0.1}$	≥105	6	$90.99_{-0.04}^{0}$		
JRTFH129B..	270 450	316 520	236 142	373	70 10	–	M30 45	105H7	135	105h6	229	2.5	M20
JRTFV159B..	310 540	364 620	286 170	455	80 15	–	M36 55	125H7	155	125h6	275	7	M20

Model	Hollow shaft dimension														Torque Arm Dimensions	
	H J	N Q l_1	l_2	l_3	l_4	l_5	l_6	l_7	l_8	M	S_1	X_1 X_2 X_3	Y_1 Y_2	z β	k_1 m_1 n_1	p_1 q_1
JRTFH39B..	248	112	166	146	31	20	36	25	–	-	–	11	158	14	40	20
JRTFV39B..	165	120 22.5	122	120	25	85	18	25	18	30X1.25X30X22	M10X30	47.5 31.5	26	29	12.5 5	1
JRTFH49B..	270.5	128.1	197	177	32	20	37	25	–	-	–	11	170	14	40	20
JRTFV49B..	180	120 31	152	150	32	115	18	32	18	35X2X30X16	M10X30	58 31	22	26	12.5 5	1.8
JRTFH59B..	315	136	221	195	26	20	31	25	–	-	–	19	198	14	40	20
JRTFV59B..	200	160 33.5	168	166	32	130	18	32	18	35X2X30X16	M10X30	60 41	23	28	12.5 5	2.4
JRTFH69B..	340	159.5	235	208	38	20	43	25	–	-	–	20.5	218	14	40	20
JRTFV69B..	212	160 37	180	180	42	130	25	42	25	45X2X30X21	M10X30	73 40.5	26	24	12.5 5	3
JRTFH79B..	423	200	284	241	36	30	41	35	–	-	–	20	278	22	60	30
JRTFV79B..	270	200 36.5	210	210	52	160	23	52	23	50X2X30X24	M16X50	80 50	39	25	21 10	3.2
JRTFH89B..	523.5	246.7	322	281	41	40	46	45	–	-	–	19	346	22	60	30
JRTFV89B..	330	250 43	240	240	62	180	25	62	25	65X2X30X31	M20X60	95 62	41	26	21 10	4.5
JRTFH99B..	619	285	379	345	55	50	60	55	–	-	–	28	395	26	80	40
JRTFV99B..	400	300 48.5	300	300	72	240	25	72	25	70X2X30X34	M20X60	110 70	57	29	25 12	5
JRTFH109B..	717	332.4	424	405	65	60	75	70	–	-	–	57	485	26	80	40
JRTFV109B..	450	350 69.5	353	350	89	290	26	89	26	85X3X30X27	M20X60	100 86	108	25	25 12	6
JRTFH129B..	856 530	382.6 450 79.25	509	485	85	70	95	80	–	–	–	66 125 110	550 138	33 25	100 32 15	60 9
JRTFV159B..	1021 660	447 550 118	610	580	90	80	100	90	–	–	–	98 140 150	660 170	33 25	120 32 15	60 9

JRTFV...B...Spline shaft is a cording to DIN standard .If you need GB or ISO standard . Please contact with us.

JRTFF39..~JRTFF159..

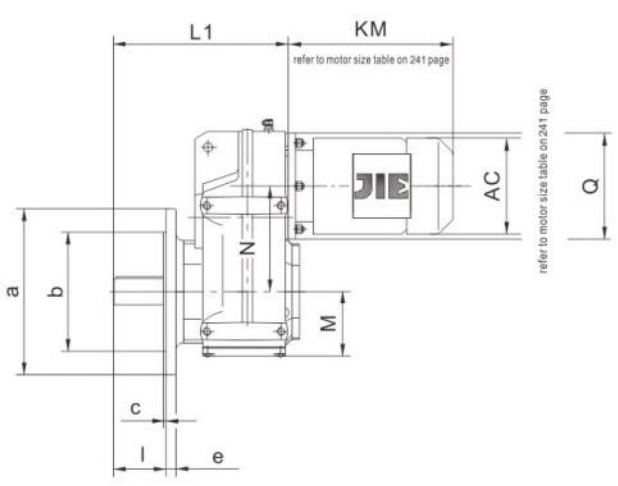

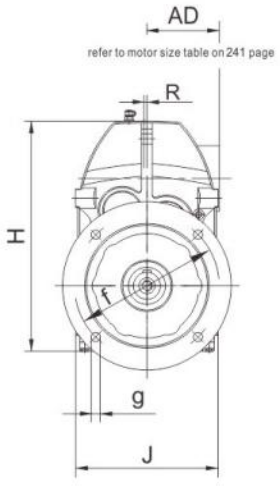

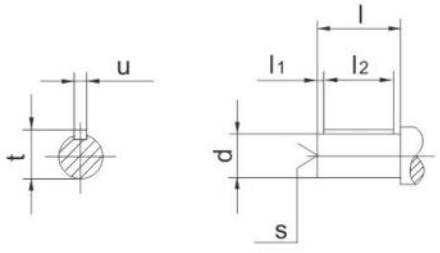

JRTFAF39..~JRTFAF159..

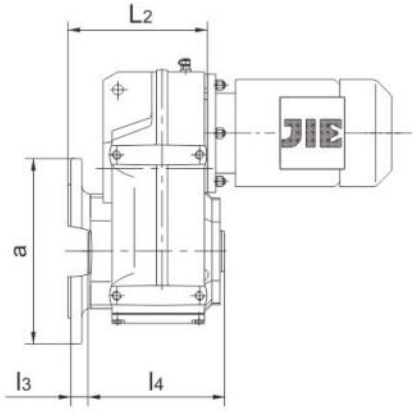

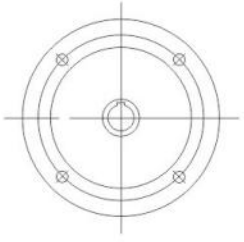

Flg.1

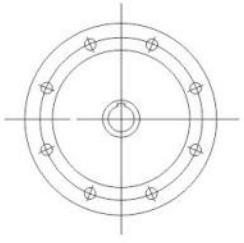

Flg.2

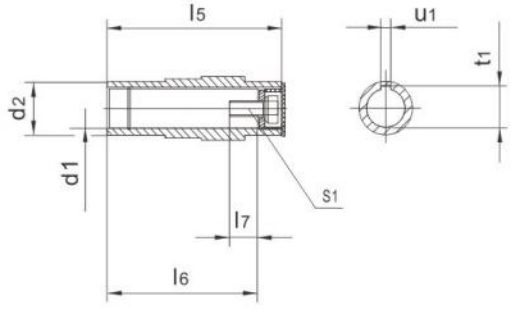

flange form

Model	flange form	a b	c e	f g	Shaft dimension				Hollow shaft dimension					H J	L_1 L_2 R	M N Q
					d l	l_1 l_2	s	t u	d_1 d_2	l_3 l_4	l_5 l_6	l_7 s_1	t_1 u_1			
JRTFF39.. JRTFAF39..	Flg.1	160 110j6	3.5 10	130 9	Φ1.000in-0.0005 1.97	0.33in 1.31in	D3/8-16x0.86in	1.11in 0.250in	Φ1.250inH7 Φ1.77	24 123	120 105	0.68in 7/16-14x1.00in	1.37in 0.250in	248 165	184 138 0	73.5 112 120
JRTFF49.. JRTFAF49..	Flg.1	200 130j6	3.5 12	165 11	Φ1.250in-0.0005 2.36	0.28in 1.69in	D1/2-13x1.15in	1.36in 0.250in	Φ1.375inH7 Φ1.97	25 153	150 132	0.63in 1/2-13x1.00in	1.53in 0.3155in	270.5 180	218 162 0	77.5 128.1 120
JRTFF59.. JRTFAF59..	Flg.1	250 180j6	4 15	215 13.5	Φ1.375in-0.0005 2.76	0.47in 1.81in	D1/2-13x1.15in	1.51in 0.3155in	Φ1.500inH7 Φ2.17	23.5 170	166 142	1.39in 5/8-11x1.75in	1.67in 0.375in	315 200	243 177 0	92.5 136 160
JRTFF69.. JRTFAF69..	Flg.1	250 180j6	4 15	215 13.5	Φ1.625in-0.001 3.15	0.45in 2.25in	D5/8-11x1.37in	1.79in 0.375in	Φ1.500inH7 Φ2.17	23 184	180 156	1.40in 5/8-11x1.75in	1.67in 0.375in	340 212	264 188 0	95.5 159.5 160
JRTFF79.. JRTFAF79..	Flg.1	300 230h6	4 16	265 13.5	Φ2.000in-0.001 3.94	0.66in 2.63in	D3/4-10x1.61in	2.22in 0.500in	Φ2.000inH7 Φ2.76	37 213	210 183	1.19in 5/8-11x1.75in	2.24in 0.500in	423 270	330 234 0	115.5 200 200
JRTFF89.. JRTFAF89..	Flg.1	350 250h6	5 18	300 17.5	Φ2.375in-0.001 4.72	0.55in 3.63in	D3/4-10x1.61in	2.65in 0.625in	Φ2.375inH7 Φ3.35	30 243	240 210	1.42in 3/4-10x2.00in	2.67in 0.625in	523.5 330	374 259 0	145.5 246.7 250
JRTFF99.. JRTFAF99..	Flg.2	450 350h6	5 22	400 17.5	Φ2.875in-0.001 5.51	0.69in 4.13in	D3/4-10x1.61in	3.20in 0.750in	Φ2.750inH7 Φ3.74	41.5 303	300 270	1.28in 3/4-10x2.00in	3.05in 0.625in	619 400	456 321 0	173.5 285 300
JRTFF109.. JRTFAF109..	Flg.2	450 350h6	5 22	400 17.5	Φ3.625in-0.001 6.69	0.66in 5.38in	D1-8x2.15in	4.01in 0.875in	Φ3.625inH7 Φ4.65	41 353	350 313	1.27in 3/4-10x2.00in	3.89in 0.875in	717 450	523 358 0	200 332.4 350
JRTFF129.. JRTFAF129..	Flg.2	550 450h6	5 25	500 17.5	Φ4.375-0.001 8.27	1.13in 6.00in	D1-8x2.15in	4.82in 1.000in	Φ4.000inH7 Φ5.31	51 413	410 373	1.27in 1-8x2.25in	4.46in 1.000in	856 530	634 429 10	236 382.6 450
JRTFF159.. JRTFAF159..	Flg.2	660 550h6	6 28	600 22	Φ4.750-0.001 8.27	0.85in 6.56in	D1-8x2.15in	5.29in 1.250in	Φ4.500inH7 Φ6.10	60 503	500 460	1.02in 1-8x2.25in	4.95in 1.000in	1021 660	725 521 15	286 447 550

JRTFHF39..~JRTFHF159..

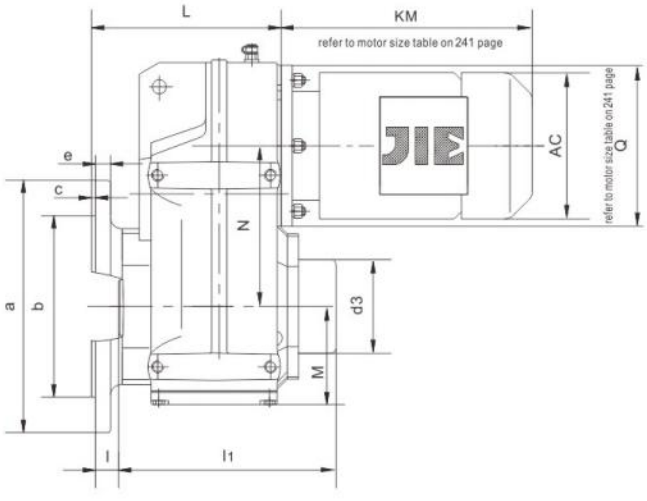

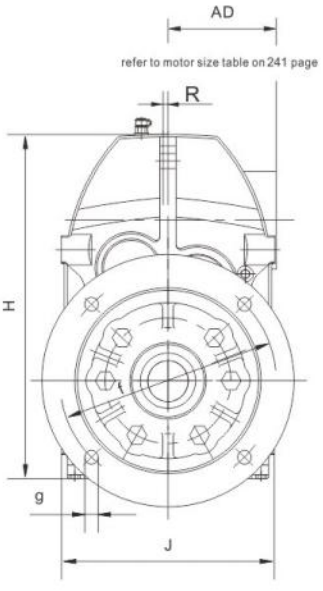

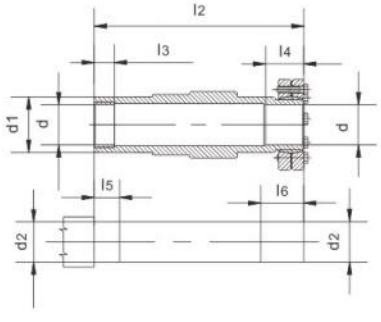

JRTFVF39..~JRTFVF109..

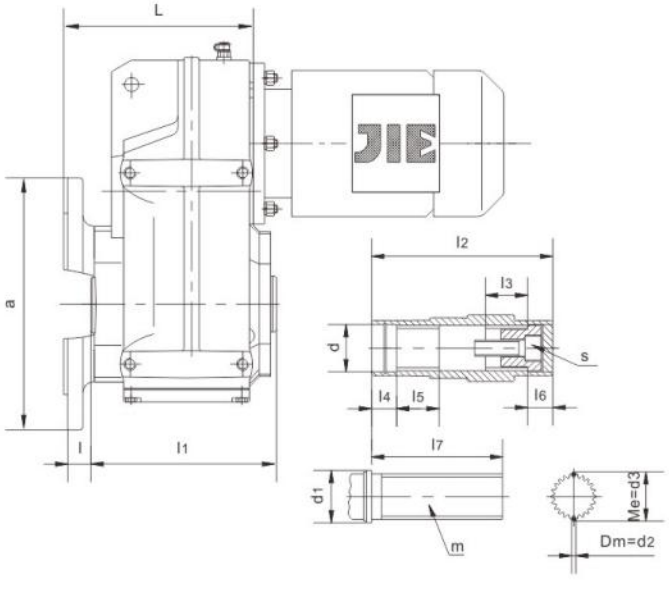



Flg.1

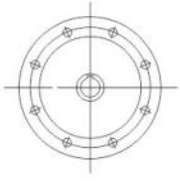

Flg.2

flange form

Model	flange form	a b	c e	f g	l	l_1	l_2	l_3	l_4	l_5	l_6	l_7	d	d_1	d_2	d_3	s	m	H J	L R	M N Q
JRTFHF39..	Flg.1	160	3.5	130	24	166	146	20	31	25	36	–	30H7	45	30h6	80	–	–	248	138	73.5
JRTFVF39..		110j6	10	9		122	120	25	18	25	18	85	$37^{+0.1}_{0}$	≥42	2.75	$33.03^{0}_{-0.03}$	M10X30	30X1.25 X30X22	165	0	112 120
JRTFHF49..	Flg.1	200	3.5	165	25	197	177	20	32	25	37	–	35H7	50	35h6	88	–	–	270.5	162	77.5
JRTFVF49..		130j6	12	11		152	150	32	18	32	18	115	$37^{+0.1}_{0}$	≥42	4	$38.92^{0}_{-0.03}$	M10X30	35X2X 30X16	180	0	128.1 120
JRTFHF59..	Flg.1	250	4	215	23.5	221	195	20	26	25	31	–	40H7	55	40h6	100	–	–	315	177	92.5
JRTFVF59..		180j6	15	13.5		168	166	32	18	32	18	130	$37^{+0.1}_{0}$	≥42	4	$38.92^{0}_{-0.03}$	M10X30	35X2X 30X16	200	0	136 160
JRTFHF69..	Flg.1	250	4	215	23	235	208	20	38	25	43	–	40H7	55	40h6	100	–	–	340	188	95.5
JRTFVF69..		180j6	15	13.5		180	180	42	25	42	25	130	$47^{+0.1}_{0}$	≥52	4	$48.85^{0}_{-0.03}$	M16X50	45X2X 30X21	212	0	159.5 160
JRTFHF79..	Flg.1	300	4	265	37	284	241	30	36	35	41	–	50H7	70	50h6	124	–	–	423	234	115.5
JRTFVF79..		230h6	16	13.5		210	210	52	23	52	23	160	$55^{+0.1}_{0}$	≥62	4	$54.13^{0}_{-0.03}$	M16X50	50X2X 30X24	270	0	200 200
JRTFHF89..	Flg.1	350	5	300	30	322	281	40	41	45	46	–	65H7	85	65h6	165	–	–	523.5	259	145.5
JRTFVF89..		250h6	18	17.5		240	240	62	25	62	25	180	$72^{+0.1}_{0}$	≥82	4	$68.96^{0}_{-0.04}$	M20X60	65X2X 30X31	330	0	246.7 250
JRTFHF99..	Flg.2	450	5	400	41.5	379	345	50	55	55	60	–	75H7	95	75h6	200	–	–	619	321	173.5
JRTFVF99..		350h6	22	17.5		300	300	72	25	72	25	240	$72^{+0.1}_{0}$	≥90	4	$74.15^{0}_{-0.04}$	M20X60	70X2X 30X34	400	0	285 300
JRTFHF109..	Flg.2	450	5	400	41	424	405	60	65	70	75	–	95H7	118	95h6	196	–	–	717	358	200
JRTFVF109..		350h6	22	17.5		353	350	89	26	89	26	290	$90^{+0.1}_{0}$	≥105	6	$90.99^{0}_{-0.04}$	M20X60	85X3X 30X27	450	0	332.4 350
JRTFHF129..	Flg.2	550	5	500	51	509	485	70	85	80	95	–	105H7	135	105h6	229	–	–	856	429	236
		450h6	25	17.5															530	10	382.6 450
JRTFHF159..	Flg.2	660	6	600	60	610	580	80	90	90	100	–	125H7	155	125h6	275	–	–	1021	521	286
		550h6	28	22															660	15	447 550
JRTFHF169..	Flg.2	660	6	600	54	667	645	90	122	100	130	–	See Figure	190	See Figure	315	–	–	1038	536	282.5
		550h6	31	22															706	0	451.5 550

JRTFVF...Spline shaft is a cording to DIN standard .If you need GB or ISO standard . Please contact with us.

JRTFAZ39..~JRTFAZ159..

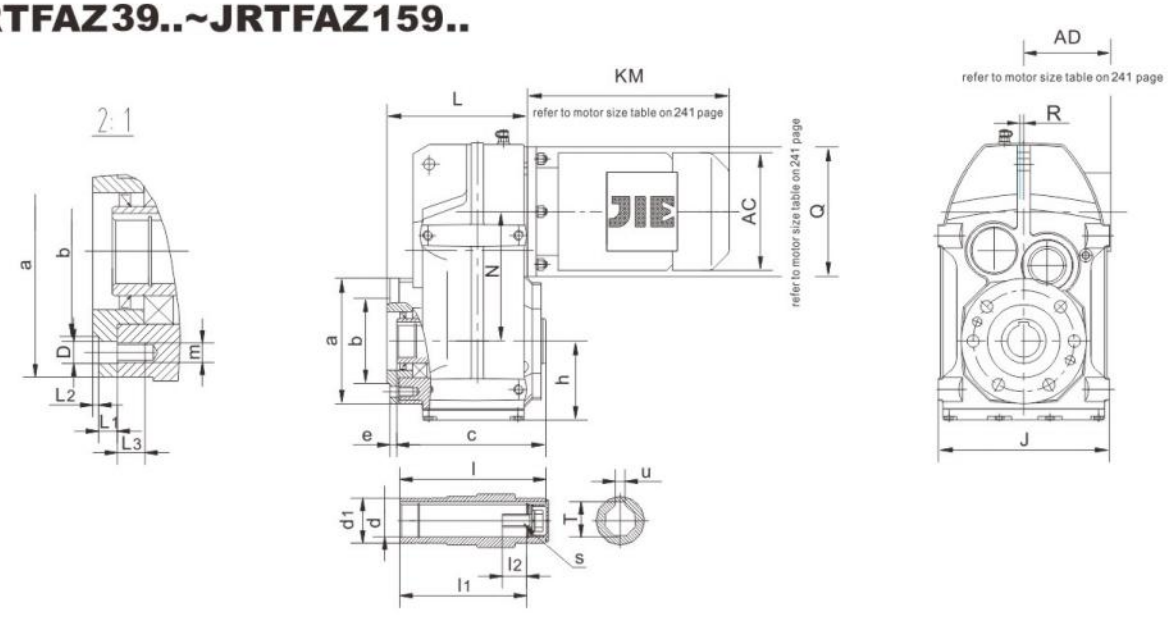

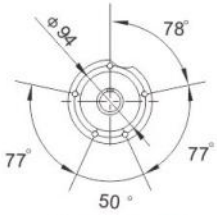

JRTF..Z39..

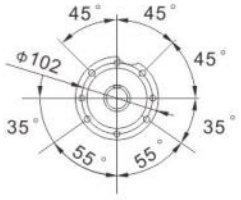

JRTF..Z49..

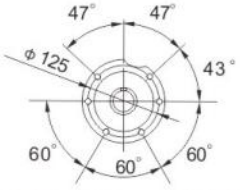

JRTF..Z59..、JRTF..Z69..

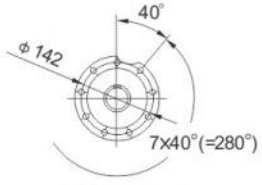

JRTF..Z79..

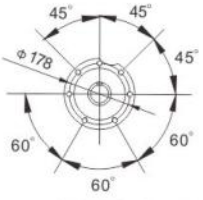

JRTF..Z89..

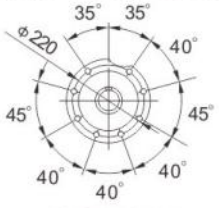

JRTF..Z99..

JRTFHZ39..~JRTFHZ159..

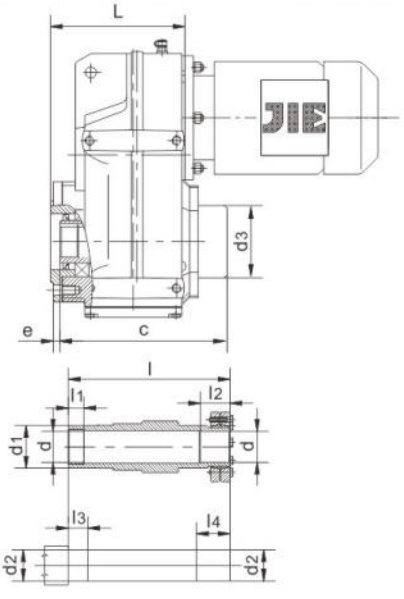

JRTFVZ39..~JRTFVZ109..

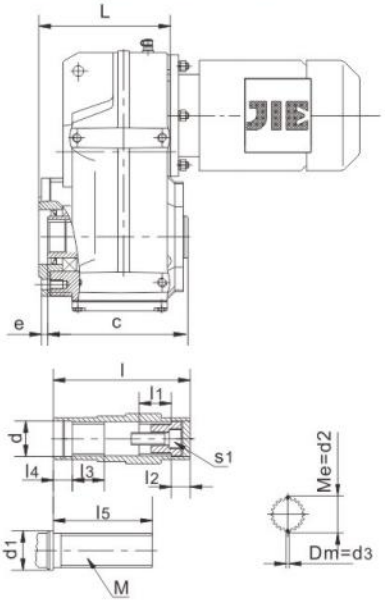

Model	a	b	e	h	D	L R	L_1	L_2	L_3	Q	m	J	N	c
JRTFAZ39.. JRTFHZ39.. JRTFVZ39..	110	80j6	9	73.5	9	122 0	11.5	3	11	120	M8	165	112	123 166 122
JRTFAZ49.. JRTFHZ49.. JRTFVZ49..	120	80j6	8	77.5	9	144 0	11	3	11	120	M8	180	128.1	153 197 152
JRTFAZ59.. JRTFHZ59.. JRTFVZ59..	155	105j6	9	92.5	13.5	162 0	12	3.5	17	160	M12	200	136	170 221 168
JRTFAZ69.. JRTFHZ69.. JRTFVZ69..	155	105j6	8.5	95.5	13.5	173 0	12	3.5	17	160	M12	212	159.5	184 235 180
JRTFAZ79.. JRTFHZ79.. JRTFVZ79..	170	125j6	10	115.5	13.5	206 0	14	3.5	17	200	M12	270	200	213 284 210
JRTFAZ89.. JRTFHZ89.. JRTFVZ89..	215	155j6	11	145.5	17.5	239 0	15	4	26	250	M16	330	246.7	243 322 240
JRTFAZ99.. JRTFHZ99.. JRTFVZ99..	260	180j6	14	173.5	17.5	292 0	18	4	26	300	M16	400	285	303 379 300
JRTFAZ109.. JRTFHZ109.. JRTFVZ109..	304	210j6	8	200	22	312 0	22	4	28	350	M20	450	332.4	353 424 353
JRTFAZ129.. JRTFHZ129..	350	250j6	5	236	22	377.5 10	30	5	28	450	M20	530	382.6	413 509
JRTFHAZ159.. JRTFHZ159..	400	290j6	14	286	26	455 15	28	5	36	550	M24	660	447	503 610

Model	l	l_1	l_2	l_3	l_4	l_5	d	d_1	d_2	d_3	U	T	S	S_1	M
JRTFAZ39..	120	105	0.68in	–	–	–	Φ1.250inH7	45	–	–	0.250in	1.37in	7/16-14x1.00in	–	–
JRTFHZ39..	146	20	1.22	25	36	–	Φ30mmH7	45	30h6	80	-	-	-	–	–
JRTFVZ39..	120	25	0.71	25	18	85	Φ37mm+0.1	⩾42	33.03 $^{0}_{-0.03}$	2.25	-	-	-	M10X30	30X1.25X30X22
JRTFAZ49..	150	132	0.63in	–	–	–	Φ1.375inH7	50	–	–	0.3155in	1.53in	1/2-13x1.00in	–	–
JRTFHZ49..	177	20	1.26	25	37	–	Φ35mmH7	50	35h6	88	-	-	-	–	–
JRTFVZ49..	150	32	0.71	32	18	115	Φ37mm+0.1	⩾42	38.92 $^{0}_{-0.03}$	4	-	-	-	M10X30	35X2X30X16
JRTFAZ59..	166	142	1.39in	–	–	–	Φ1.500inH7	55	–	–	0.375in	1.67in	5/8-11x1.75in	–	–
JRTFHZ59..	195	20	1.02	25	31	–	Φ40mmH7	55	40h6	100	-	-	-	–	–
JRTFVZ59..	166	32	0.71	32	18	130	Φ37mm+0.1	⩾42	38.92 $^{0}_{-0.03}$	4	-	-	-	M10X30	35X2X30X16
JRTFAZ69..	180	156	1.4in	–	–	–	Φ1.500inH7	55	–	–	0.375in	1.67in	5/8-11x1.75in	–	–
JRTFHZ69..	208	20	1.50	25	43	–	Φ40mmH7	55	40h6	100	-	-	-	–	–
JRTFVZ69..	180	42	0.98	42	25	130	Φ47mm+0.1	⩾52	48.85 $^{0}_{-0.03}$	4	-	-	-	M16X50	45X2X30X21
JRTFAZ79..	210	183	1.19in	–	–	–	Φ2.000inH7	70	–	–	0.500in	2.24in	5/8-11x1.75in	–	–
JRTFHZ79..	241	30	1.42	35	41	–	Φ50mmH7	70	50h6	124	-	-	-	–	–
JRTFVZ79..	210	52	0.91	52	23	160	Φ55mm+0.1	⩾62	54.13 $^{0}_{-0.03}$	4	-	-	-	M16X50	50X2X30X24
JRTFAZ89..	240	210	1.42in	–	–	–	Φ2.375inH7	85	–	–	0.625in	2.67in	3/4-10x2.00in	–	–
JRTFHZ89..	281	40	1.61	45	46	–	Φ65mmH7	85	65h6	165	-	-	-	–	–
JRTFVZ89..	240	62	0.98	62	25	180	Φ72mm+0.1	⩾82	68.96 $^{0}_{-0.04}$	4	-	-	-	M20X60	65X2X30X31
JRTFAZ99..	300	270	1.28in	–	–	–	Φ2.750inH7	95	–	–	0.625in	3.05in	3/4-10x2.00in	–	–
JRTFHZ99..	345	50	2.17	55	60	–	Φ75mmH7	95	75h6	200	-	-	-	–	–
JRTFVZ99..	300	72	0.98	72	25	240	Φ72mm+0.1	⩾90	74.15 $^{0}_{-0.04}$	4	-	-	-	M20X60	70X2X30X34
JRTFAZ109..	350	313	1.27in	–	–	–	Φ3.625inH7	118	–	–	0.875in	3.89in	3/4-10x2.00in	–	–
JRTFHZ109..	405	60	2.56	70	75	–	Φ95mmH7	118	95h6	196	-	-	-	–	–
JRTFVZ109..	350	89	1.02	89	26	290	Φ90mm+0.1	⩾105	90.99 $^{0}_{-0.04}$	6	-	-	-	M24X60	85X3X30X27
JRTFAZ129..	410	373	1.27in	–	–	–	Φ4.000inH7	135	–	–	1.000in	4.46in	1-8x2.25in	–	–
JRTFHZ129..	485	70	3.35	80	95	–	Φ105mmH7	135	105h6	229	-	-	-	M24X60	–
JRTFAZ159..	500	460	1.02in	–	–	–	Φ4.500inH7	155	–	–	1.000in	4.95in	1-8x2.25in	–	–
JRTFHZ159..	580	80	3.54	90	100	–	Φ155mmH7	155	125h6	275	-	-	-	M24X60	–

JRTFVZ...Spline shaft is a cording to DIN standard .If you need GB or ISO standard . Please contact with us.

JRTF..AD..



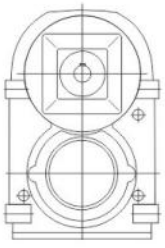

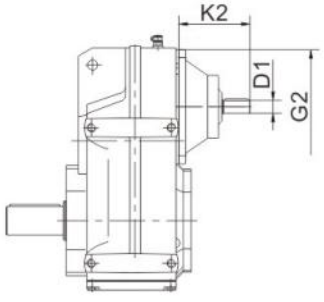

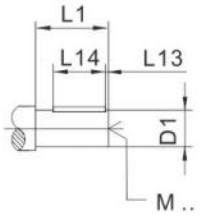

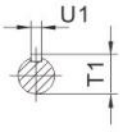

		G2	K2	D1	L1	L13	L14	T1	U1	M
JRTF..39	AD1	120	102	0.625in	40	4	32	0.70in	0.1875in	1/4-20x0.63
JRTF..49	AD2		130	0.750in	40	4	32	0.83in	0.1875in	1/4-20x0.63
JRTF..59	AD2	160	123	0.750in	40	4	32	0.83in	0.1875in	1/4-20x0.63
JRTF..69	AD3		159	0.875in	50	5	40	0.96in	0.1875in	5/16-18x0.87
JRTF..79	AD2	200	116	0.750in	40	4	32	0.83in	0.1875in	1/4-20x0.63
	AD3		151	0.875in	50	5	40	0.96in	0.1875in	5/16-18x0.87
	AD4		224	1.375in	80	5	70	1.51in	0.3125in	1/2-13x1.12
JRTF..89	AD2	250	111	0.750in	40	4	32	0.83in	0.1875in	1/4-20x0.63
	AD3		156	0.875in	60	5	50	0.96in	0.1875in	5/16-18x0.87
	AD4		219	1.375in	80	5	70	1.51in	0.3125in	1/2-13x1.12
	AD5		292	1.625in	110	10	70	1.79in	0.375in	5/8-11x1.38
JRTF..99	AD3	300	151	0.875in	60	5	50	0.96in	0.1875in	5/16-18x0.87
	AD4		214	1.375in	80	5	70	1.51in	0.3125in	1/2-13x1.12
	AD5		287	1.625in	110	10	70	1.79in	0.375in	5/8-11x1.38
	AD6		327	1.875in	110	10	80	2.09in	0.50in	5/8-11x1.38
JRTF..109	AD3	350	145	0.875in	60	5	50	0.96in	0.1875in	5/16-18x0.87
	AD4		208	1.375in	80	5	70	1.51in	0.3125in	1/2-13x1.12
	AD5		281	1.625in	110	10	70	1.79in	0.375in	5/8-11x1.38
	AD6		321	1.875in	110	10	80	2.09in	0.50in	5/8-11x1.38
JRTF..129	AD4	450	193	1.375in	80	5	70	1.51in	0.3125in	1/2-13x1.12
	AD5		266	1.625in	110	10	70	1.79in	0.375in	5/8-11x1.38
	AD6		306	1.875in	110	10	80	2.09in	0.50in	5/8-11x1.38
	AD7		300	2.125in	110	10	90	2.35in	0.50in	3/4-10x1.61
	AD8		383	2.750in	140	15	110	3.03in	0.625in	3/4-10x1.61
JRTF..159	AD5	550	258	1.625in	110	10	70	1.79in	0.375in	5/8-11x1.38
	AD6		298	1.875in	110	10	80	2.09in	0.50in	5/8-11x1.38
	AD7		292	2.125in	110	10	90	2.35in	0.50in	3/4-10x1.61
	AD8		374	2.750in	140	15	110	3.03in	0.625in	3/4-10x1.61

JRTF..R..

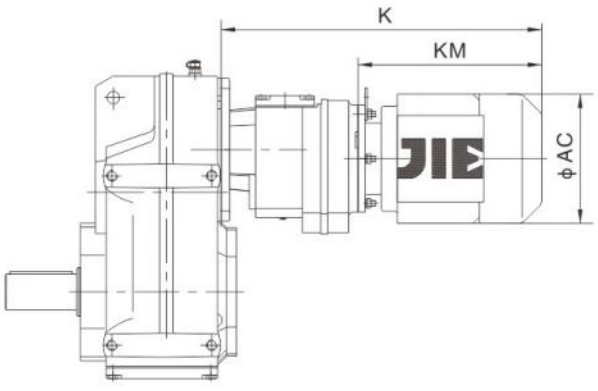

		AC	K	KM
JRTF..39R19 JRTF..49R19	DN63	120	373	198
	DN71	135	403	228
	DN80	156	454	279
JRTF..59R39	DN63	120	363	198
	DN71	135	393	228
	DN80	156	444	279
JRTF..69R39	DN63	120	363	198
	DN71	135	393	228
	DN80	156	444	279
	DN90	175	456	291
JRTF..79R39	DN63	120	355	198
	DN71	135	385	228
	DN80	156	436	279
	DN90	175	448	291
JRTF..89R59	DN63	120	408	192
	DN71	135	437	221
	DN80	156	488	272
	DN90	175	500	284
	DN100	198	575	359
JRTF..99R59	DN63	120	403	192
	DN71	135	432	221
	DN80	156	483	272
	DN90	175	495	284
	DN100	198	570	359
	DN112M	221	603	392
JRTF..109R79	DN63	120	433	186
	DN71	135	461	214
	DN80	156	512	265
	DN90	175	524	277
	DN100	198	599	352

		AC	K	KM
JRTF..109R79	DN112M	221	628	383
	DN132S	221	628	383
	DN132M	263	708	463
	DN160	314	755	508
JRTF..129R79	DN63	120	418	186
	DN71	135	446	214
	DN80	156	497	265
	DN90	175	509	277
	DN100	198	584	352
	DN112M	221	613	383
	DN132S	221	613	383
	DN132M	263	693	463
	DN160	314	740	508
JRTF..129R89	DN80	156	540	260
	DN90	175	552	272
	DN100	198	627	347
	DN112M	221	656	378
	DN132S	221	656	378
	DN132M	263	736	458
	DN160	314	783	503
	DN180M	355	904	624
	DN180L	355	952	672
JRTF..159R99	DN90	175	592	267
	DN100	198	667	342
	DN112M	221	696	373
	DN132S	221	696	373
	DN132M	263	776	453
	DN160	314	823	498
	DN180M	355	944	619
	DN180L	355	992	667
	DN200L	397	1005	680

Notes:The dimension of motor in the above table is only for reference .If you have special require, pls consult us.

8. JRTK Helical Bevel Gearmotor

1. Versions of JIE gearmotor

The following types of helical-bevel geared motor can be supplied.



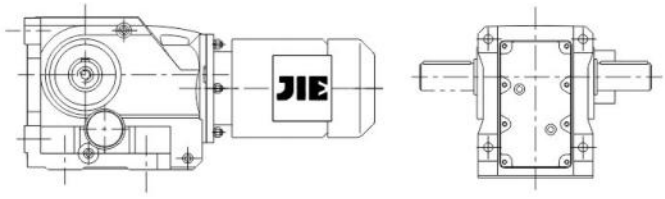

JRTK..D..
Foot-mounted

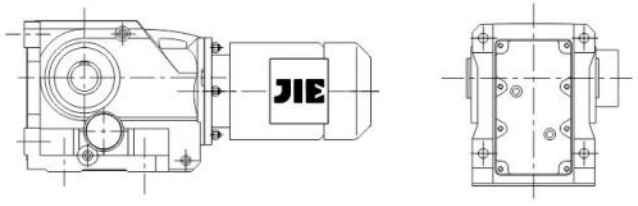

JRTKA..B D..
Foot-mounted with hollow shaft.

JRTKV..B D..
Foot-mounted with hollow shaft and splined hollow shaft to DIN 5480.

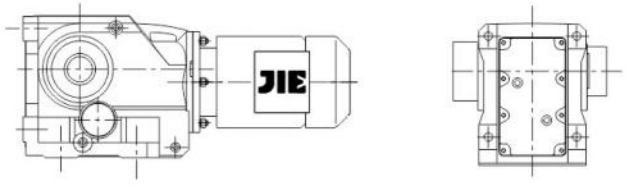

JRTKH..B D..
Foot-mounted with hollow shaft and shrink disk.

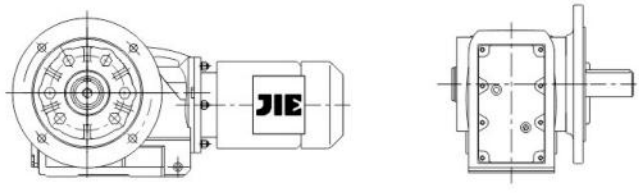

JRTKF..D..
B5 flange-mounted version

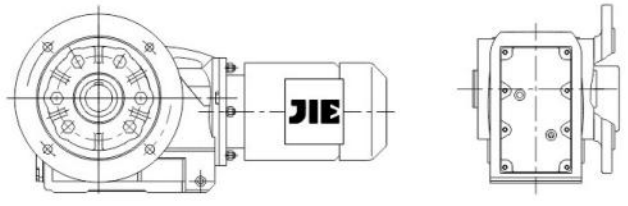

JRTKAF..D..
B5 flange-mounted version with hollow shaft.

JRTKVF..D..
B5 flange-mounted version with hollow shaft and splined hollow shaft to DIN 5480.

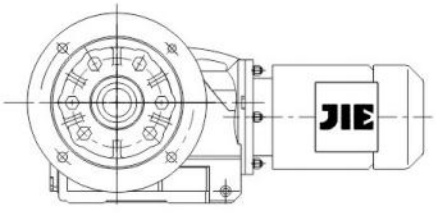

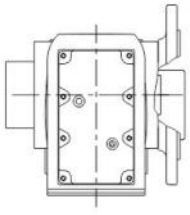

JRTKHF..D..

B5 flange-mounted version with hollow shaft and shrink disk

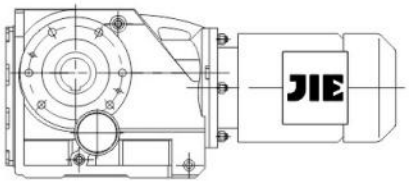

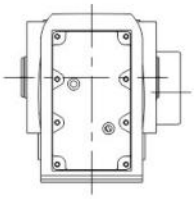

JRTKA..D..

hollow shaft.

JRTKV..D..

hollow shaft and splined hollow shaft to DIN 5480.

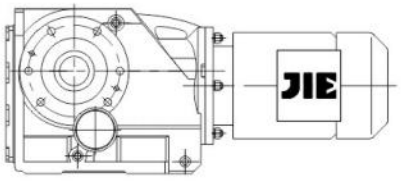

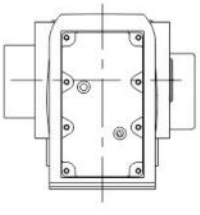

JRTKH..D..

hollow shaft and shrink disk.

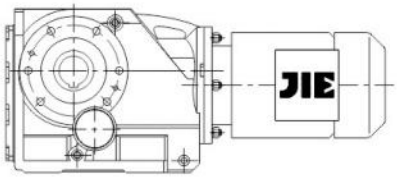

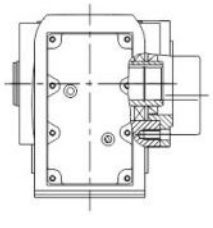

JRTKAZ..D..

B14 flange-mounted version with hollow shaft.

JRTKVZ..D..

B14 flange mounted version with hollow shaft and splined hollow to DIN 5480.

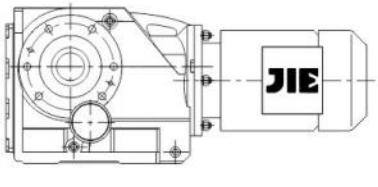

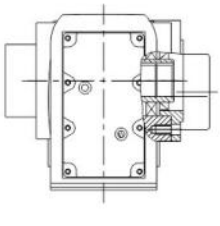

JRTKHZ..D..

B14 flange mounted version with hollow shaft and shrink disk.

2. JRTK Helical Bevel Gearmotor Model Description

J	RTK	A	69	–	T	DN	80	M	4	–	BE	–	HF	–	TF	–	108.03	–	B	–	M1	–	180°	–	IS
1	2	3	4		5	6	7	8	9		10		11		12		13		14		15		16		17

1 Enterprise Code

J- JIE Drive

2 Product Code

RTK- Helical-Bevel Geared Motor

3 Unit Model

No Code- Foot-mounted
F- Flange-mounted
A- Hollow Shaft-mounted
AF- Flange-mounted with Hollow Shaft

4 Gear Unit Size

69- Gearmotor Size 69

5 Torque Arm

No Code- No Torque Arm
T- Torque Arm

6 Electric Motor

D– Three Phase Asychronous Motor(IP 54)
DU/DN – Energy efficiency rating class 2/class 3
YB– Flame–proof Three Phase Asychronous Motor
YGP– Table Roller Three Phase Asychronous Motor
YZP– Metallurgy Hoist Frequency Variable Motor
YD– Multi Speed Three Phase Motor

7 Frame Size

80– Motor Center Height 80mm

8 Stator Length

S、M、L

9 Number of Poles

4-4P

10 Brake

No Code- No Brakes
BE- Brakes

11 Brake Release

No Code- No brake release
HF- Screw release(lock in the brake release position)
Brake release
HR- Handle release(automatic braking position)

12 Thermal Protection

No Code- No Thermistor
TF- Thermistor Sensor
TF- Thermistor protection (PTC thermistor)
TH- Thermostat protection (Bimetal switch)

13 Ratio

108.03- Ratio 108.03

14 Position of the Output Shaft

A- Shaft with A
B- Shaft with B
AB- Shaft with A+B

15 Mounting Position

M1- Mounting Position M1

16 Terminal Box Position

No Code- Terminal Box Position is 0°
180° - Terminal Box Position is 180°

17 16 Inch Symbol

IS- Inch size

3. Type of Combination

The below is combination table between gear box and electromotor in each list the ratio range.

Type \ Motor power hp	Stages	0.16~0.50	0.75~1	1.5~2	3~4	5	7.5	10
JRTK/KF/KA/KAF39	3	3.98-106.38	3.98-83.69	3.98-24.99 29.96-72.54	3.98-10.49 13.08-20.19 29.96-58.60			
JRTK/KF/KA/KAF49	3	7.36-11.77 13.65-31.30 39.61-131.87	4.64-104.37	4.64-90.86	4.64-21.81 25.91 35.39-63.30 75.20			
JRTK/KF/KA/KAF59	3	9.59-11.92 19.34-35.70 48.89-145.14	7.55-11.92 15.22-123.85	4.69-108.29	4.69-90.26	4.69-30.28 38.49-76.56		
JRTK/KF/KA/KAF69	3	10.63-12.48 19.30-35.62 48.77-144.79	8.37-12.48 15.19-123.54	5.2-108.03	5.2-90.04	5.2-30.22 38.39-76.37	5.2-24.00 38.39-60.66	5.2-24.00 38.39-60.66
JRTK/KF/KA/KAF79	3	25.62-38.39 64.75-192.18	10.84-12.36 20.25-38.39 51.18-154.02	7.24-135.28	7.24-113.56	7.24-97.05	7.24-30.89 40.04-78.07	7.24-30.89 40.04-78.07
JRTK/KF/KA/KAF89	3		16.00 27.88-31.39 70.46-197.37	11.17 16.00 19.45-31.39 49.16-174.19	8.29-11.17 14.45-147.32	8.29-11.17 14.45-126.91	7.21-102.71	7.21-102.71
JRTK/KF/KA/KAF99	3			24.75-38.30 62.55-176.05	18.96-38.30 47.93-176.05	18.96-38.30 47.93-153.21	8.71-123.93	8.71-123.93
JRTK/KF/KA/KAF109	3				13.43 22.62-29.00 32.69 57.17-143.47	13.43 22.62-29.00 32.69 57.17-143.47	8.69-29.00 32.69-143.47	8.69-29.00 32.69-143.47
JRTK/KF/KA/KAF129	3							12.79 21.15-36.25 47.82-146.07

Type \ Motor power hp	Stages	12.3	15	20	25~30	40
JRTK/KF/KA/KAF79	3	7.24-23.08 40.04-58.34	7.24-23.08 40.04-58.34			
JRTK/KF/KA/KAF89	3	7.21-79.34	7.21-79.34	7.21-79.34	7.21-14.45 17.42-24.92 36.52-63.00	
JRTK/KF/KA/KAF99	3	8.71-96.80	8.71-96.80	8.71-96.80	8.71-30.82 41.87-77.89	8.71-24.75 41.87-62.55
JRTK/KF/KA/KAF109	3	8.69-112.41	8.69-112.41	8.69-112.41	8.69-90.96	8.69-31.28 37.00-73.30
JRTK/KF/KA/KAF129	3	10.74-12.79 17.77-136.14	10.74-12.79 17.77-136.14	10.74-12.79 17.77-136.14	8.68-110.18	8.68-89.89
JRTK/KF/KA/KAF159	3		18.37-31.30 46.79-150.41	18.37-31.30 46.79-150.41	14.92-122.39	12.65-100.22
JRTK/KH169	3		24.52-32.25 51.77-164.50	24.52-32.25 51.77-164.50	20.32-32.25 42.89-134.99	17.34-109.83
JRTK/KH189	3		33.23-42.51 88.00-179.86	33.23-42.51 88.00-179.86	27.92-42.51 73.96-179.86	17.18-179.86

Type \ Motor power hp	Stages	50~60	75	100~125	150~200	250~300
JRTK/KF/KA/KAF109	3	8.69-31.28 37.00-73.30				
JRTK/KF/KA/KAF129	3	8.68-89.89	8.68-31.37 40.19-70.95	8.68-31.37 40.19-70.95		
JRTK/KF/KA/KAF159	3	12.65-100.22	12.65-79.75	12.65-79.75	12.65-23.95 38.02-61.02	12.65-18.37 38.02-46.79
JRTK/KH169	3	17.34-109.83	17.34-87.86	17.34-87.86	17.34-68.07	17.34-24.52 36.61-51.77
JRTK/KH189	3	17.18-179.86	17.18-144.59	17.18-144.59	17.18-112.60	17.18-33.23 45.50-88.00

4. Ratio and Max Torque

JRTK39-59 n_e=1700 r/min

JRTK39			1760 lbf · in	
i	n_a [r/min]	M_{amax} lbf · in	F_{Ra} lbf	AD
106.38	16	1760	1270	AD1
97.81	17	1760	1270	
83.69	20	1760	1210	
72.54	23	1760	1140	
67.80	25	1760	1100	
58.60	29	1760	1030	
49.79	34	1760	960	
44.46	38	1760	900	
37.97	45	1760	840	
35.57	48	1760	810	
29.96	57	1760	745	AD2
28.83	59	1760	730	
24.99	68	1760	675	
23.36	73	1720	660	
20.19	84	1630	630	
17.15	99	1590	590	
15.31	111	1540	565	
13.08	130	1450	535	
12.14	140	1410	525	
10.49	162	1410	485	
8.91	191	1410	445	
7.96	214	1370	425	
6.80	250	1320	395	
6.37	267	1280	390	
5.36	317	1230	365	
3.98	427	1100	335	

JRTK49			3530 lbf · in	
i	n_a [r/min]	M_{amax} lbf · in	F_{Ra} lbf	AD
131.87	13	3530	1330	AD2
121.48	14	3530	1330	
104.37	16	3530	1330	
90.86	19	3530	1330	
85.12	20	3530	1330	
75.20	23	3530	1330	
69.84	24	3530	1330	
63.30	27	3530	1330	
56.83	30	3530	1330	
48.95	35	3530	1330	
46.03	37	3530	1330	
39.61	43	3530	1310	
35.39	48	3530	1240	
31.30	54	3530	1160	
29.32	58	3530	1120	
25.91	66	3530	1050	
24.06	71	3530	1000	
21.81	78	3530	950	
19.58	87	3530	890	
16.86	101	3360	850	
15.86	107	3360	820	
13.65	125	3180	780	
12.19	139	3090	745	
11.77	144	2470	820	
10.56	161	2470	775	AD3
9.10	187	2470	715	
8.56	199	2380	705	
7.36	231	2210	685	
6.58	258	2120	660	
5.81	293	2030	635	
4.64	366	1810	605	

JRTK59			5300 lbf · in	
i	n_a [r/min]	M_{amax} lbf · in	F_{Ra} lbf	AD
145.14	12	5300	1720	AD2
123.85	14	5300	1720	
108.29	16	5300	1720	
102.88	17	5300	1720	
90.26	19	5300	1720	
76.56	22	5300	1720	
69.12	25	5300	1720	
60.81	28	5300	1720	
57.42	30	5300	1720	
48.89	35	5300	1720	
44.43	38	5300	1720	
38.49	44	5300	1680	
35.70	48	5300	1620	
30.28	56	5300	1480	
27.34	62	5300	1400	
24.05	71	5300	1310	
22.71	75	5300	1270	
19.34	88	5080	1190	
17.57	97	4910	1160	
15.22	112	4730	1090	AD3
13.25	128	4510	1050	
11.92	143	3670	1040	
11.26	151	3670	1010	
9.59	177	3580	940	
8.71	195	3450	910	
7.55	225	3220	880	
6.57	259	3050	850	
4.69	362	2650	770	

JRTK69-89 n_e=1700 r/min

JRTK69			7250 lbf · in	
i	n_a [r/min]	M_{amax} lbf · in	F_{Ra} lbf	AD
144.79	12	7250	2320	
123.54	14	7250	2320	
108.03	16	7250	2320	
102.62	17	7250	2320	
90.04	19	7250	2320	
76.37	22	7250	2320	
68.95	25	7250	2320	AD2
60.66	28	7250	2320	
57.28	30	7250	2320	
48.77	35	7250	2320	
44.32	38	7250	2320	
38.39	44	7070	2360	
35.62	48	7250	2320	
30.22	56	7250	2320	
27.28	62	7250	2320	
24.00	71	7070	2360	
22.66	75	6900	2390	
19.30	88	6720	2430	
17.54	97	6540	2470	AD3
15.19	112	6190	2530	
13.22	129	5920	2560	
12.48	136	4680	2570	
10.63	160	4420	2460	
9.66	176	4240	2390	
8.37	203	3890	2320	
7.28	234	3710	2230	
5.20	327	3090	2060	

JRTK79			13700 lbf · in	
i	n_a [r/min]	M_{amax} lbf · in	F_{Ra} lbf	AD
192.18	8.8	12800	3610	
179.37	9.5	12800	3610	
154.02	11	13700	3460	
135.28	13	13700	3460	
128.52	13	13700	3460	
113.56	15	13700	3460	
97.05	18	13700	3460	AD2
88.97	19	13700	3460	
78.07	22	13700	3460	
73.99	23	13700	3460	
64.75	26	13700	3460	
58.34	29	13700	3460	
51.18	33	13700	3460	
45.16	38	13700	3460	
40.04	42	13700	3460	
38.39	44	13200	3530	AD3
35.20	48	13700	3460	
30.89	55	13700	3460	
29.27	58	13700	3460	
25.62	66	13700	3460	
23.08	74	13700	3460	
20.25	84	13200	3460	
17.87	95	12800	3330	
15.84	107	12300	3210	AD4
13.52	126	11800	3060	
12.36	138	8840	3140	
10.84	157	8750	2990	
9.56	178	8310	2890	
8.48	200	7870	2810	
7.24	235	7250	2710	

JRTK89			23800 lbf · in	
i	n_a [r/min]	M_{amax} lbf · in	F_{Ra} lbf	AD
197.37	8.6	23800	6130	
174.19	9.8	23800	6130	
164.34	10	23800	6130	
147.32	12	23800	6130	AD2
126.91	13	23800	6130	
115.82	15	23800	6130	
102.71	17	23800	6130	
86.34	20	23800	6130	
79.34	21	23800	5970	
70.46	24	23800	5670	
63.00	27	23800	5410	
56.64	30	23800	5160	AD3
49.16	35	23800	4840	
44.02	39	23000	4700	
36.52	47	22100	4400	
31.39	54	23800	3930	
27.88	61	23000	3790	
24.92	68	22100	3680	
22.41	76	20300	3680	
19.45	87	20300	3440	
17.42	98	19400	3350	AD4
16.00	106	15900	3290	
14.45	118	18500	3150	
12.56	135	17600	3030	
11.17	152	13200	3080	
10.00	170	13200	2920	
8.29	205	12300	2780	AD5
7.21	236	11500	2720	



JRTK99-129 n_e=1700 r/min

JRTK99			38000 lbf · in	
i	n_a [r/min]	M_{amax} lbf · in	F_{Ra} lbf	AD
176.05	9.7	38000	8990	AD3
153.21	11	38000	8990	
140.28	12	38000	8990	
123.93	14	38000	8990	
105.13	16	38000	8710	
96.80	18	38000	8420	
86.52	20	38000	8030	
77.89	22	38000	7670	
70.54	24	38000	7350	
62.55	27	38000	6970	AD4
56.55	30	38000	6660	
47.93	35	38000	6180	
41.87	41	38000	5800	
38.30	44	38000	5560	AD5
34.23	50	38000	5260	
30.82	55	38000	5000	
27.91	61	38000	4750	
24.75	69	38000	4460	
22.37	76	38000	4230	
18.96	90	38000	3860	
16.56	103	38000	3580	
13.85	123	38000	3220	AD6
11.99	142	34400	3260	
10.41	163	25300	3320	AD5
8.71	195	23500	3200	AD6

JRTK109			70700 lbf · in	
i	n_a [r/min]	M_{amax} lbf · in	F_{Ra} lbf	AD
143.47	12	70700	13600	AD4
121.46	14	70700	12600	
112.41	15	70700	12100	
100.75	17	70700	11500	
90.96	19	70700	10900	
82.61	21	70700	10300	
73.30	23	70700	9680	
66.52	26	70700	9150	
57.17	30	70700	8360	
49.90	34	69300	7840	
42.33	40	65100	7580	AD5
37.00	46	63700	7130	
32.69	52	63700	6570	
31.28	54	60100	6840	
29.00	59	63700	6040	AD6
26.32	65	63700	5620	
22.62	75	63700	4970	
19.74	86	63700	4400	
16.75	101	62300	3920	
14.64	116	60900	3600	
13.43	127	38000	6010	
11.73	145	38000	5640	
9.94	171	37000	5290	
8.69	196	36000	5050	

JRTK129			115000 lbf · in	
i	n_a [r/min]	M_{amax} lbf · in	F_{Ra} lbf	AD
146.07	12	115000	17800	AD4
136.14	12	115000	17800	
122.48	14	115000	17700	
110.18	15	115000	16900	
89.89	19	115000	15500	AD5
81.98	21	115000	14900	
70.95	24	115000	13900	
62.60	27	115000	13200	
54.07	31	115000	12300	
47.82	36	115000	11600	
4019	42	115000	10600	AD6
36.25	47	115000	10100	AD7
31.37	54	115000	9320	
27.68	61	115000	8710	
23.91	71	115000	7940	
21.15	80	115000	7200	AD8
17.77	96	115000	6160	
14.35	118	107000	5880	
12.79	133	75400	7190	
10.74	158	70700	6880	
8.68	196	63900	6630	

JRTK159-189, JRTK39R19,JRTK49/59R39 n_e=1700 r/min

JRTK159			159200 lbf·in	
i	n_a [r/min]	M_{amax} lbf·in	F_{Ra} lbf	AD
150.41	11	159200	24100	AD5
122.39	14	159200	22100	
100.22	17	159200	20300	
91.65	19	159200	19500	
79.75	21	159200	18300	
70.38	24	159200	17400	
61.02	28	159200	16300	
54.29	31	159200	15400	AD6
46.79	36	159200	14300	AD7
38.02	45	159200	12900	
31.30	54	159200	11700	AD8
27.62	62	159200	10900	
23.95	71	159200	10100	
21.31	80	159200	9450	
18.37	93	159200	8660	
14.92	114	159200	7600	
12.65	134	150400	7300	

JRTK169			283100 lbf·in	
i	n_a [r/min]	M_{amax} lbf·in	F_{Ra} lbf	AD
164.50	10	283100	33700	AD5
134.99	13	283100	33700	AD6
109.83	15	283100	33500	
87.86	19	283100	30500	AD7
78.14	22	283100	28900	
68.07	25	283100	27200	
60.74	28	283100	25900	
51.77	33	283100	24100	AD8
42.89	40	283100	22000	
36.61	46	283100	20400	
32.25	53	283100	19100	
28.77	59	283100	18000	
24.52	69	283100	16600	
20.32	84	283100	14900	
17.34	98	283100	13600	

JRTK189			442300 lbf·in	
i	n_a [r/min]	M_{amax} lbf·in	F_{Ra} lbf	AD
179.86	9.5	442300	42700	AD6
165.21	10	442300	42700	
144.59	12	442300	40800	
129.69	13	442300	38900	AD7
112.60	15	442300	36600	
102.16	17	442300	35000	
88.00	19	442300	32700	AD8
73.96	23	442300	30200	
64.04	27	442300	28200	
53.36	32	442300	25800	
45.50	37	442300	23700	
42.51	40	442300	22900	
38.57	44	442300	21800	
33.23	51	442300	20000	
27.92	61	442300	18100	
24.18	70	421100	17500	
20.15	84	388400	16900	
17.18	99	366300	16300	

JRTK39R19				1760 lbf·in	
i	n_a [r/min]	Stage K39	R19	M_{amax} lbf·in	F_{Ra} lbf
6832	0.25	3	3	1760	1270
5922	0.29	3	3	1760	1270
5491	0.31	3	3	1760	1270
4759	0.36	3	3	1760	1270
4160	0.41	3	3	1760	1270
3645	0.47	3	3	1760	1270
3205	0.53	3	3	1760	1270
2801	0.61	3	3	1760	1270
2454	0.69	3	3	1760	1270
2166	0.78	3	3	1760	1270
1891	0.90	3	3	1760	1270
1660	1.0	3	3	1760	1270
1466	1.2	3	3	1760	1270
1288	1.3	3	3	1760	1270
1136	1.5	3	3	1760	1270
996	1.7	3	2	1760	1270
876	1.9	3	2	1760	1270
761	2.2	3	2	1760	1270
671	2.5	3	2	1760	1270
585	2.9	3	2	1760	1270
512	3.3	3	2	1760	1270
451	3.8	3	2	1760	1270
396	4.3	3	2	1760	1270
346	4.9	3	2	1760	1270
304	5.6	3	2	1760	1270
267	6.4	3	2	1760	1270
234	7.3	3	2	1760	1270
205	8.3	3	2	1760	1270
181	9.4	3	2	1760	1270
160	11	3	2	1760	1270
136	12	3	2	1760	1270
127	13	3	2	1760	1270
110	15	3	2	1760	1270
96	18	3	2	1760	1270

JRTK49R39				3530 lbf·in	
i	n_a [r/min]	Stage K49	R39	M_{amax} lbf·in	F_{Ra} lbf
10138	0.17	3	3	3530	1330
9534	0.20	3	3	3530	1330
7662	0.22	3	3	3530	1330
6826	0.25	3	3	3530	1330
5983	0.28	3	3	3530	1330
5159	0.33	3	3	3530	1330
4601	0.37	3	3	3530	1330
3940	0.43	3	3	3530	1330
3477	0.49	3	3	3530	1330
3043	0.56	3	3	3530	1330
2733	0.62	3	3	3530	1330
2354	0.72	3	3	3530	1330
2063	0.82	3	3	3530	1330
1819	0.93	3	3	3530	1330
1586	1.1	3	3	3530	1330
1388	1.2	3	3	3530	1330
1222	1.4	3	2	3530	1330
1097	1.5	3	2	3530	1330
945	1.8	3	2	3530	1330
831	2.0	3	2	3530	1330
718	2.4	3	2	3530	1330
639	2.7	3	2	3530	1330
552	3.1	3	2	3530	1330
495	3.4	3	2	3530	1330
426	4.0	3	2	3530	1330
375	4.5	3	2	3530	1330
327	5.2	3	2	3530	1330
289	5.9	3	2	3530	1330
256	6.6	3	2	3530	1330
225	7.6	3	2	3530	1330
198	8.6	3	2	3530	1330
171	9.9	3	2	3530	1330
153	11	3	2	3530	1330
131	13	3	2	3530	1330
112	15	3	2	3530	1330
99	17	3	2	3530	1330
94	18	3	2	3530	1330

JRTK59R39				5300 lbf·in	
i	n_a [r/min]	Stage K59	R39	M_{amax} lbf·in	F_{Ra} lbf
12169	0.14	3	3	5300	1720
11162	0.15	3	3	5300	1720
9503	0.18	3	3	5300	1720
8547	0.20	3	3	5300	1720
7277	0.23	3	3	5300	1720
6478	0.26	3	3	5300	1720
5662	0.30	3	3	5300	1720
5033	0.34	3	3	5300	1720
4340	0.39	3	3	5300	1720
3854	0.44	3	3	5300	1720
3390	0.50	3	3	5300	1720
2924	0.58	3	3	5300	1720
2593	0.66	3	3	5300	1720
2249	0.76	3	3	5300	1720
1986	0.86	3	3	5300	1720
1743	0.98	3	2	5300	1720
1539	1.1	3	2	5300	1720
1354	1.3	3	2	5300	1720
1174	1.4	3	2	5300	1720
1036	1.6	3	2	5300	1720
906	1.9	3	2	5300	1720
806	2.1	3	2	5300	1720
699	2.4	3	2	5300	1720
615	2.8	3	2	5300	1720
544	3.1	3	2	5300	1720
473	3.6	3	2	5300	1720
421	4.0	3	2	5300	1720
362	4.7	3	2	5300	1720
319	5.3	3	2	5300	1720
280	6.1	3	2	5300	1720
246	6.9	3	2	5300	1720
215	7.9	3	2	5300	1720
192	8.9	3	2	5300	1720
166	10	3	2	5300	1720
145	12	3	2	5300	1720
129	13	3	2	5300	1720
111	15	3	2	5300	1720
97	18	3	2	5300	1720

JRTK69/79R39,JRTK89R59 n_e=1700 r/min



JRTK69R39				7250 lbf · in	
i	n_a [r/min]	Stage K69	Stage R39	M_{amax} lbf · in	F_{Ra} lbf
12139	0.14	3	3	7250	2320
11134	0.15	3	3	7250	2320
9479	0.18	3	3	7250	2320
8173	0.21	3	3	7250	2320
7259	0.23	3	3	7250	2320
6462	0.26	3	3	7250	2320
5648	0.30	3	3	7250	2320
4846	0.35	3	3	7250	2320
4329	0.39	3	3	7250	2320
3750	0.45	3	3	7250	2320
3315	0.51	3	3	7250	2320
2917	0.58	3	3	7250	2320
2532	0.67	3	3	7250	2320
2244	0.76	3	3	7250	2320
1981	0.86	3	3	7250	2320
1739	0.98	3	2	7250	2320
1535	1.1	3	2	7250	2320
1351	1.3	3	2	7250	2320
1171	1.5	3	2	7250	2320
1034	1.6	3	2	7250	2320
903	1.9	3	2	7250	2320
793	2.1	3	2	7250	2320
697	2.4	3	2	7250	2320
613	2.8	3	2	7250	2320
542	3.1	3	2	7250	2320
471	3.6	3	2	7250	2320
420	4.0	3	2	7250	2320
361	4.7	3	2	7250	2320
323	5.3	3	2	7250	2320
279	6.1	3	2	7250	2320
246	6.9	3	2	7250	2320
217	7.8	3	2	7250	2320
191	8.9	3	2	7250	2320
166	10	3	2	7250	2320
144	12	3	2	7250	2320
122	14	3	2	7250	2320

JRTK79R39				13700 lbf · in	
i	n_a [r/min]	Stage K79	Stage R39	M_{amax} lbf · in	F_{Ra} lbf
15310	0.11	3	3	13700	3460
14043	0.12	3	3	13700	3460
11955	0.14	3	3	13700	3460
10217	0.17	3	3	13700	3460
8809	0.19	3	3	13700	3460
7528	0.23	3	3	13700	3460
6606	0.26	3	3	13700	3460
5774	0.29	3	3	13700	3460
5089	0.33	3	3	13700	3460
4489	0.38	3	3	13700	3460
3961	0.43	3	3	13700	3460
3485	0.49	3	3	13700	3460
2901	0.59	3	3	13700	3460
2717	0.63	3	3	13700	3460
2370	0.72	3	3	13700	3460
2050	0.83	3	2	13700	3460
1772	0.96	3	2	13700	3460
1514	1.1	3	2	13700	3460
1388	1.2	3	2	13700	3460
1218	1.4	3	2	13700	3460
1053	1.6	3	2	13700	3460
924	1.8	3	2	13700	3460
815	2.1	3	2	13700	3460
709	2.4	3	2	13700	3460
622	2.7	3	2	13700	3460
552	3.1	3	2	13700	3460
485	3.5	3	2	13700	3460
428	4.0	3	2	13700	3460
367	4.6	3	2	13700	3460
328	5.2	3	2	13700	3460
290	5.9	3	2	13700	3460
252	6.7	3	2	13700	3460
221	7.7	3	2	13700	3460
195	8.7	3	2	13700	3460
175	9.7	3	2	13700	3460
154	11	3	2	13700	3460

JRTK89R59				23800 lbf · in	
i	n_a [r/min]	Stage K89	Stage R59	M_{amax} lbf · in	F_{Ra} lbf
14829	0.11	3	3	23800	6130
13168	0.13	3	3	23800	6130
11737	0.14	3	3	23800	6130
10217	0.17	3	3	23800	6130
9073	0.19	3	3	23800	6130
7854	0.22	3	3	23800	6130
6832	0.25	3	3	23800	6130
5930	0.29	3	3	23800	6130
5240	0.32	3	3	23800	6130
4562	0.37	3	3	23800	6130
4037	0.42	3	3	23800	6130
3609	0.47	3	3	23800	6130
3107	0.55	3	3	23800	6130
2728	0.62	3	3	23800	6130
2371	0.72	3	3	23800	6130
2088	0.81	3	2	23800	6130
1584	0.92	3	2	23800	6130
1657	1.0	3	2	23800	6130
1415	1.2	3	2	23800	6130
1229	1.4	3	2	23800	6130
1078	1.6	3	2	23800	6130
951	1.8	3	2	23800	6130
837	2.0	3	2	23800	6130
726	2.3	3	2	23800	6130
638	2.7	3	2	23800	6130
562	3.0	3	2	23800	6130
474	3.6	3	2	23800	6130
426	4.0	3	2	23800	6130
373	4.6	3	2	23800	6130
330	5.2	3	2	23800	6130
294	5.8	3	2	23800	6130
250	6.8	3	2	23800	6130
236	7.2	3	2	23800	6130
201	8.5	3	2	23800	6130
183	9.3	3	2	23800	6130
159	11	3	2	23800	6130
141	12	3	2	23000	6130

JRTK99R59,JRTK109/129R79 n_e=1700 r/min

JRTK99R59				38000 lbf·in	
i	n_a [r/min]	Stage K99	Stage R59	M_{amax} lbf·in	F_{Ra} lbf
18091	0.09	3	3	38000	8990
16666	0.10	3	3	38000	8990
14897	0.11	3	3	38000	8990
13182	0.13	3	3	38000	8990
11677	0.15	3	3	38000	8990
10317	0.16	3	3	38000	8990
9083	0.19	3	3	38000	8990
8054	0.21	3	3	38000	8990
6970	0.24	3	3	38000	8990
6027	0.28	3	3	38000	8990
5391	0.32	3	3	38000	8990
4669	0.36	3	3	38000	8990
4082	0.42	3	3	38000	8990
3583	0.47	3	3	38000	8990
3108	0.55	3	3	38000	8990
2757	0.62	3	3	38000	8990
2419	0.70	3	2	38000	8990
2123	0.80	3	2	38000	8990
1856	0.92	3	2	38000	8990
1625	1.0	3	2	38000	8990
1430	1.2	3	2	38000	8990
1261	1.3	3	2	38000	8990
1102	1.5	3	2	38000	8990
957	1.8	3	2	38000	8990
855	2.0	3	2	38000	8990
743	2.3	3	2	38000	8990
652	2.6	3	2	38000	8990
573	3.0	3	2	38000	8990
504	3.4	3	2	38000	8990
437	3.9	3	2	38000	8990
382	4.5	3	2	38000	8990
342	5.0	3	2	38000	8990
305	5.6	3	2	38000	8990
258	6.6	3	2	38000	8990
232	7.3	3	2	38000	8990
199	8.5	3	2	38000	8990

JRTK109R79				70700 lbf·in	
i	n_a [r/min]	Stage K109	Stage R79	M_{amax} lbf·in	F_{Ra} lbf
14311	0.12	3	3	70700	14600
12211	0.14	3	3	70700	14600
10677	0.16	3	3	70700	14600
9524	0.18	3	3	70700	14600
8328	0.20	3	3	70700	14600
7270	0.23	3	3	70700	14600
6184	0.27	3	3	70700	14600
5662	0.30	3	3	70700	14600
5138	0.33	3	3	70700	14600
4359	0.39	3	3	70700	14600
3810	0.45	3	3	70700	14600
3358	0.51	3	3	70700	14600
2977	0.57	3	3	70700	14600
2599	0.65	3	3	70700	14600
2286	0.74	3	3	70700	14600
1939	0.88	3	3	70700	14600
1713	0.99	3	2	70700	14600
1554	1.1	3	2	70700	14600
1336	1.3	3	2	70700	14600
1166	1.5	3	2	70700	14600
1030	1.7	3	2	70700	14600
904	1.9	3	2	70700	14600
793	2.1	3	2	70700	14600
696	2.4	3	2	70700	14600
615	2.8	3	2	70700	14600
522	3.3	3	2	70700	14600
461	3.7	3	2	70700	14600
408	4.2	3	2	70700	14600
364	4.7	3	2	70700	14600
318	5.3	3	2	70700	14600
286	5.9	3	2	70700	14600
251	6.8	3	2	70700	14600
222	7.7	3	2	70700	14600
196	8.7	3	2	70700	14600
174	9.8	3	2	63700	14600
154	11	3	2	63700	14600
140	12	3	2	63700	14100

JRTK129R79				115000 lbf·in	
i	n_a [r/min]	Stage K129	Stage R79	M_{amax} lbf·in	F_{Ra} lbf
17550	0.10	3	3	115000	17800
16006	0.11	3	3	115000	17800
14975	0.11	3	3	115000	17800
12440	0.14	3	3	115000	17800
10915	0.16	3	3	115000	17800
9819	0.17	3	3	115000	17800
8443	0.20	3	3	115000	17800
7482	0.23	3	3	115000	17800
6565	0.26	3	3	115000	17800
5804	0.29	3	3	115000	17800
5027	0.34	3	3	115000	17800
4423	0.38	3	3	115000	17800
3889	0.44	3	3	115000	17800
3311	0.51	3	3	115000	17800
3009	0.56	3	3	115000	17800
2607	0.65	3	3	115000	17800
2268	0.75	3	3	115000	17800
1926	0.88	3	2	115000	17800
1757	0.97	3	2	115000	17800
1541	1.1	3	2	115000	17800
1342	1.3	3	2	115000	17800
1177	1.4	3	2	115000	17800
1025	1.7	3	2	115000	17800
899	1.9	3	2	115000	17800
790	2.2	3	2	115000	17800
704	2.4	3	2	115000	17800
610	2.8	3	2	115000	17800
549	3.1	3	2	115000	17800
477	3.6	3	2	115000	17800
418	4.1	3	2	115000	17800

JRTK129R89,JRTK159R99,JRTK159R109 n_e=1700 r/min



JRTK129R89				115000 lbf·in	
i	n_a [r/min]	Stage K129	Stage R89	M_{amax} lbf·in	F_{Ra} lbf
536	3.2	3	2	115000	17800
473	3.6	3	2	115000	17800
418	4.1	3	2	115000	17800
367	4.6	3	2	115000	17800
330	5.2	3	2	115000	17800
287	5.9	3	2	115000	17800
253	6.7	3	2	115000	17800
213	8.0	3	2	115000	17800
200	8.5	3	2	106100	17900
166	10	3	2	106100	17900
147	12	3	2	106100	17900

JRTK159R99				159200 lbf·in	
i	n_a [r/min]	Stage K159	Stage R99	M_{amax} lbf·in	F_{Ra} lbf
17679	0.10	3	3	159200	25200
15729	0.11	3	3	159200	25200
14721	0.12	3	3	159200	25200
13097	0.13	3	3	159200	25200
11368	0.15	3	3	159200	25200
10114	0.17	3	3	159200	25200
8718	0.19	3	3	159200	25200
7734	0.22	3	3	159200	25200
6881	0.25	3	3	159200	25200
5931	0.29	3	3	159200	25200
5074	0.34	3	3	159200	25200
4514	0.38	3	3	159200	25200
3979	0.43	3	3	159200	25200
3516	0.48	3	3	159200	25200
3051	0.56	3	3	159200	25200
2610	0.65	3	3	159200	25200
2322	0.73	3	3	159200	25200
2029	0.84	3	3	159200	25200
1805	0.94	3	3	159200	25200
1659	1.0	3	2	159200	25200
1365	1.2	3	2	159200	25200
1229	1.4	3	2	159200	25200
1093	1.6	3	2	159200	25200
942	1.8	3	2	159200	25200
854	2.0	3	2	159200	25200
756	2.2	3	2	159200	25200
661	2.6	3	2	159200	25200
567	3.0	3	2	159200	25200
504	3.4	3	2	159200	25200
434	3.9	3	2	159200	25200
379	4.5	3	2	159200	25200
333	5.1	3	2	159200	25200
291	5.8	3	2	159200	25200

JRTK159R109				159200 lbf·in	
i	n_a [r/min]	Stage K159	Stage R109	M_{amax} lbf·in	F_{Ra} lbf
385	4.4	3	2	159200	25200
325	5.2	3	2	159200	25200
299	5.7	3	2	159200	25200
253	6.7	3	2	159200	25200
230	7.4	3	2	159200	25200
213	8.0	3	2	159200	25200
187	9.1	3	2	159200	25200
157	11	3	2	159200	24500
122	14	3	2	159200	22100
107	16	3	2	159200	20900

JRTK169/189R99,JRTK169/189R109 n_e=1700 r/min

JRTK169R99				283100 lbf·in	
i	n_a [r/min]	Stage K169	Stage R99	M_{amax} lbf·in	F_{Ra} lbf
19723	0.09	3	3	283100	33700
17406	0.10	3	3	283100	33700
15000	0.11	3	3	283100	33700
13238	0.13	3	3	283100	33700
11573	0.15	3	3	283100	33700
10264	0.17	3	3	283100	33700
8628	0.20	3	3	283100	33700
6562	0.26	3	3	283100	33700
5355	0.32	3	3	283100	33700
4788	0.36	3	3	283100	33700
4079	0.42	3	3	283100	33700
3376	0.50	3	3	283100	33700
2755	0.62	3	3	283100	33700
2263	0.75	3	3	283100	33700
2182	0.78	3	2	283100	33700
1704	1.00	3	2	283100	33700
1408	1.2	3	2	283100	33700
1296	1.3	3	2	283100	33700
1101	1.5	3	2	283100	33700
944	1.8	3	2	283100	33700
843	2.0	3	2	283100	33700
757	2.2	3	2	283100	33700
632	2.7	3	2	283100	33700
561	3.0	3	2	283100	33700
481	3.5	3	2	283100	33700
423	4.0	3	2	283100	33700
369	4.6	3	2	283100	33700

JRTK189R109			50000Nm
i	n_a [1/min]	M_{amax} [Nm]	F_{Ra} [N]
835	2.0	442300	42700
729	2.3	442300	42700
622	2.7	442300	42700
520	3.3	442300	42700
454	3.7	442300	42700
355	4.8	442300	42700
261	6.5	442300	42700
221	7.7	442300	42700
193	8.8	442300	42700
163	10	442300	42700

JRTK169R109				283100 lbf·in	
i	n_a [r/min]	Stage K169	Stage R109	M_{amax} lbf·in	F_{Ra} lbf
318	5.3	3	2	283100	33700
278	6.1	3	2	283100	33700
244	7.0	3	2	283100	33700
213	8.0	3	2	283100	33700
206	8.3	3	2	283100	33700
180	9.4	3	2	283100	33700
160	11	3	2	283100	33700
135	13	3	2	283100	33700
118	14	3	2	283100	33700

JRTK189R99				442300 lbf·in	
i	n_a [r/min]	Stage K189	Stage R99	M_{amax} lbf·in	F_{Ra} lbf
32625	0.05	3	3	442300	42700
27165	0.06	3	3	442300	42700
24353	0.07	3	3	442300	42700
19144	0.09	3	3	442300	42700
16978	0.10	3	3	442300	42700
14272	0.12	3	3	442300	42700
13116	0.13	3	3	442300	42700
11647	0.15	3	3	442300	42700
10413	0.16	3	3	442300	42700
9363	0.18	3	3	442300	42700
8126	0.21	3	3	442300	42700
7343	0.23	3	3	442300	42700
6747	0.25	3	3	442300	42700
5991	0.28	3	3	442300	42700
5358	0.32	3	3	442300	42700
4817	0.35	3	3	442300	42700
4370	0.39	3	3	442300	42700
2818	0.60	3	3	442300	42700
3609	0.47	3	2	442300	42700
3062	0.56	3	2	442300	42700
2519	0.67	3	2	442300	42700
2268	0.75	3	2	442300	42700
2054	0.83	3	2	442300	42700
1821	0.93	3	2	442300	42700
1605	1.1	3	2	442300	42700
1395	1.2	3	2	442300	42700
1196	1.4	3	2	442300	42700
1046	1.6	3	2	442300	42700
945	1.8	3	2	442300	42700
738	2.3	3	2	442300	42700
621	2.7	3	2	442300	42700
527	3.2	3	2	442300	42700

5. Model Selection Table

Structure of the selection tables

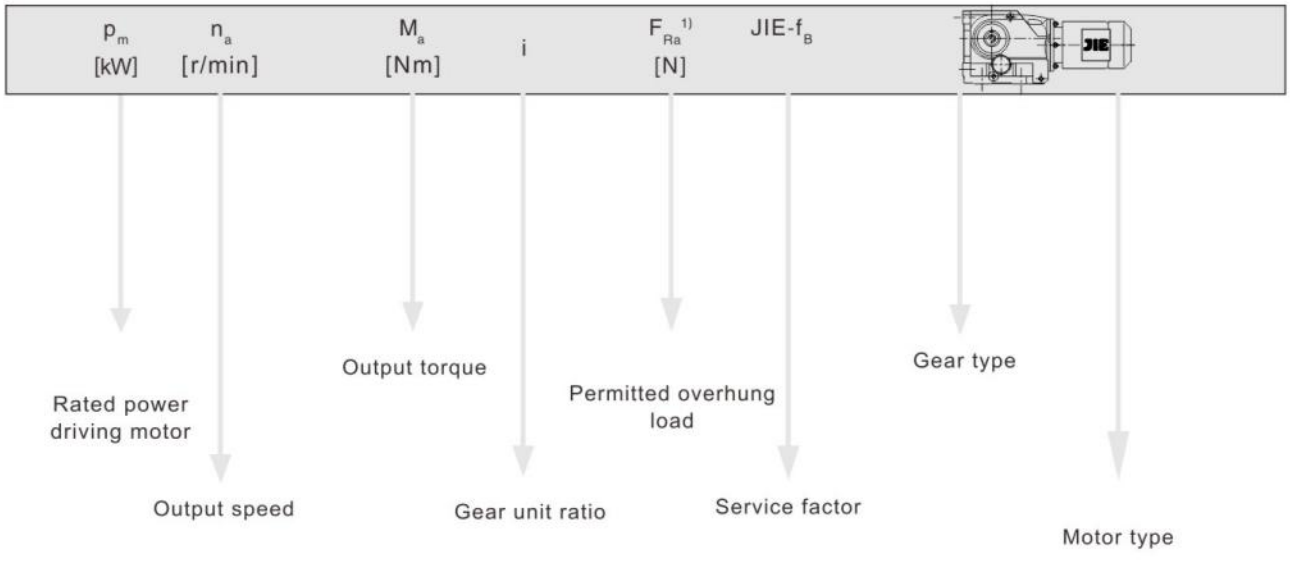

For particularly low output speeds

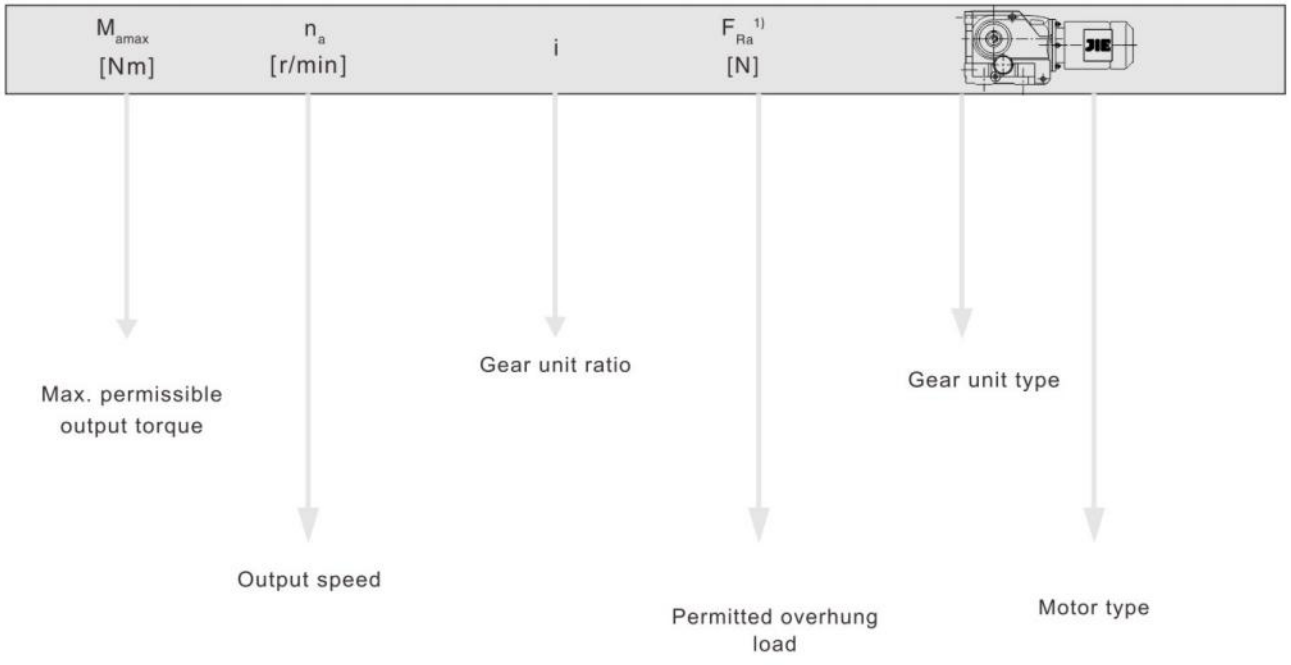

Cuttine

1)Overhung load specified for foot-mounted gear unit with solid shaft

Notice:

In drives for particularly low output speeds(multi-stage geared motors),the motor power must be limited according to the maximum permitted output torque of the gear unit.

Output speed n_a [r/min]	Output torque T_a lbf • in	Ratio i	Permitted overhung load F_{Ra} [1)] lbf	Service factor f_B	Model
0.16HP					
0.10	74200	17550	18300	1.55	
0.10	67600	16006	18300	1.70	JRTK129R79DN63S4
0.11	63300	14975	18400	1.80	JRTKF129R79DN63S4
0.14	52600	12440	18400	2.2	JRTKA129R79DN63S4
0.15	46100	10915	18500	2.5	JRTKAF129R79DN63S4
0.17	41500	9819	18500	2.8	
0.20	34900	8443	18500	3.3	
0.22	31600	7482	18600	3.6	
0.12	60500	14311	14600	1.15	
0.14	51600	12211	14600	1.35	
0.16	45100	10677	14600	1.55	JRTK109R79DN63S4
0.18	40200	9524	14600	1.75	JRTKF109R79DN63S4
0.20	35200	8328	14600	2.0	JRTKA109R79DN63S4
0.23	30700	7270	14600	2.3	JRTKAF109R79DN63S4
0.27	24700	6184	14600	2.9	
0.30	21000	5662	14600	3.4	
0.33	19000	5138	14600	3.7	
0.39	18000	4359	14600	3.9	
0.24	30200	6970	8990	1.25	
0.28	27700	6027	8990	1.35	
0.31	25500	5391	8990	1.50	JRTK99R59DN63S4
0.36	20700	4669	8990	1.85	JRTKF99R59DN63S4
0.41	18900	4082	8990	2.0	JRTKA99R59DN63S4
0.47	16400	3583	8990	2.3	JRTKAF99R59DN63S4
0.54	14600	3108	8990	2.6	
0.61	12000	2757	8990	3.1	
0.69	11500	2419	8990	3.3	
0.79	9870	2123	8990	3.9	JRTK99R59DN63S4
0.91	8910	1856	8990	4.3	JRTKF99R59DN63S4
1.0	7130	1625	8990	5.3	JRTKA99R59DN63S4
1.2	6030	1430	8990	6.3	JRTKAF99R59DN63S4
1.3	6050	1261	8990	6.3	
1.5	5290	1102	8990	7.2	
0.37	19700	4562	6250	1.20	
0.42	18500	4037	6280	1.30	JRTK89R59DN63S4
0.47	16500	3609	6330	1.45	JRTKF89R59DN63S4
0.54	14200	3107	6380	1.65	JRTKA89R59DN63S4
0.62	11800	2728	6420	2.0	JRTKAF89R59DN63S4
0.71	10500	2371	6440	2.3	
0.80	10000	2088	6450	2.4	
0.91	8900	1854	6470	2.7	
1.0	7960	1657	6480	3.0	JRTK89R59DN63S4
1.2	6730	1415	6490	3.5	JRTKF89R59DN63S4
1.4	5840	1229	6500	4.1	JRTKA89R59DN63S4
1.6	5010	1078	6510	4.8	JRTKAF89R59DN63S4
1.8	4170	951	6520	5.7	
2.0	3530	837	6520	6.8	
2.3	3060	726	6520	7.8	
0.62	12800	2717	3600	1.05	JRTK79R39DN63S4 JRTKF79R39DN63S4
0.71	10500	2370	3930	1.30	JRTKA79R39DN63S4 JRTK79R39DN63S4
0.82	10000	2050	3980	1.35	
0.95	8560	1772	4140	1.60	
1.1	7310	1514	4250	1.85	
1.2	6700	1388	4290	2.0	JRTK79R39DN63S4
1.4	5880	1218	4350	2.3	JRTKF79R39DN63S4
1.6	5170	1053	4390	2.6	JRTKA79R39DN63S4
1.8	4540	924	4420	3.0	JRTK79R39DN63S4
2.1	4000	815	4440	3.4	
2.4	3030	709	4480	4.5	
2.7	2660	622	4490	5.1	

Output speed n_a [r/min]	Output torque T_a lbf • in	Ratio i	Permitted overhung load F_{Ra} [1)] lbf	Service factor f_B	Model
0.16HP					
1.2	6800	1351	2410	1.05	
1.4	5800	1171	2600	1.25	
1.6	5080	1034	2710	1.45	
1.9	4170	903	2820	1.75	
2.1	4030	793	2830	1.80	
2.4	3120	697	2910	2.3	JRTK69R39DN63S4 JRTKF69R39DN63S4
2.7	2750	613	2920	2.6	JRTKA69R39DN63S4
3.1	2400	542	2920	3.0	JRTKAF69R39DN63S4
3.6	2300	471	2920	3.1	
4.0	1850	420	2920	3.9	
4.7	1710	361	2920	4.2	
5.2	1500	323	2920	4.8	
6.0	1230	279	2920	5.9	
6.8	1080	246	2920	6.7	
7.7	940	217	2920	7.7	
1.9	4180	906	1920	1.25	
2.1	3790	806	1970	1.40	
2.4	3130	699	2040	1.70	
2.7	2750	615	2080	1.90	
3.1	2400	544	2110	2.2	
3.5	2240	473	2120	2.4	JRTK59R39DN63S4 JRTKF59R39DN63S4
4.0	1860	421	2160	2.9	JRTKA59R39DN63S4
4.6	1720	362	2170	3.1	JRTKAF59R39DN63S4
5.3	1510	319	2180	3.5	
6.0	1230	280	2200	4.3	
6.8	1090	246	2220	4.9	
7.8	960	215	2220	5.5	
8.8	860	192	2230	6.2	
3.0	2660	552	1580	1.35	
3.4	2220	495	1670	1.60	JRTK49R39DN63S4
3.9	2000	426	1710	1.75	JRTKF49R39DN63S4
4.5	1660	375	1760	2.1	JRTKA49R39DN63S4
5.2	1570	327	1770	2.2	JRTKAF49R39DN63S4
5.8	1370	289	1790	2.6	
5.5	1430	304	1250	1.25	
6.3	1320	267	1270	1.35	JRTK39R19DN63S4
7.2	1140	234	1320	1.55	JRTKF39R19DN63S4
8.2	990	205	1350	1.80	JRTKA39R19DN63S4
9.3	860	181	1380	2.0	JRTKAF39R19DN63S4
10	750	160	1410	2.4	
12	620	136	1440	2.8	
7.6	1320	144.79	2920	5.5	JRTK69DN63M6 JRTKF69DN63M6 JRTKA69DN63M6 JRTKAF69DN63M6
7.6	1330	145.14	2200	4.0	
8.9	1130	123.85	2210	4.7	JRTK59DN63M6
10	990	108.29	2220	5.3	JRTKF59DN63M6
11	940	102.88	2230	5.6	JRTKA59DN63M6
12	820	90.26	2230	6.4	JRTKAF59N63M6
14	700	76.56	2240	7.6	
12	870	145.14	2230	6.1	
14	740	123.85	2240	7.1	JRTK59DN63S4 JRTKF59DN63S4
16	645	108.29	2240	8.2	JRTKA59DN63S4
16	615	102.88	2250	8.6	JRTKAF59DN63S4
19	540	90.26	2250	9.8	



Output speed n_a [r/min]	Output torque T_a lbf • in	Ratio i	Permitted overhung load F_{Ra} [1] lbf	Service factor f_B	Model
0.16HP					
8.3	1200	131.87	1810	2.9	JRTK49DN63M6 JRTKF49DN63M6 JRTKA49DN63M6 JRTKAF49DN63M6
9.1	1110	121.48	1820	3.2	
11	950	104.37	1830	3.7	
13	790	131.87	1840	4.5	JRTK49DN63S4 JRTKF49DN63S4 JRTKA49DN63S4 JRTKAF49DN63S4
14	725	121.48	1840	4.9	
10	970	106.38	1350	1.80	JRTK39DN63M6 JRTKF39DN63M6 JRTKA39DN63M6 JRTKAF39DN63M6
11	890	97.81	1370	1.95	
13	765	83.69	1400	2.3	
15	660	72.54	1430	2.7	
16	635	106.38	1430	2.8	JRTK39DN63S4 JRTKF39DN63S4 JRTKA39DN63S4 JRTKAF39DN63S4
17	585	97.81	1440	3.0	
20	500	83.69	1460	3.5	
23	435	72.54	1450	4.1	
25	405	67.80	1420	4.3	
0.25HP					
0.11	108500	14975	17900	1.05	JRTK129R79DN63M4 JRTKF129R79DN63M4 JRTKA129R79DN63M4 JRTKAF129R79DN63M4
0.14	90100	12440	18100	1.30	
0.16	79100	10915	18200	1.45	
0.17	71100	9819	18300	1.60	
0.20	60400	8443	18400	1.90	
0.23	54200	7482	18400	2.1	
0.26	47500	6565	18500	2.4	
0.29	39500	5804	18500	2.9	
0.34	35200	5027	18500	3.3	
0.38	30100	4423	18600	3.8	
0.44	26100	3889	18600	4.4	
0.51	21500	3311	18600	5.3	
0.20	60300	8328	14600	1.15	JRTK109R79DN63M4 JRTKF109R79DN63M4 JRTKA109R79DN63M4 JRTKAF109R79DN63M4
0.23	52600	7270	14600	1.35	
0.27	43400	6184	14600	1.65	
0.30	38000	5662	14600	1.85	
0.33	34500	5138	14600	2.0	
0.39	31100	4359	14600	2.3	
0.45	27200	3810	14600	2.6	
0.51	22800	3358	14600	3.1	
0.57	20900	2977	14600	3.4	
0.65	18200	2599	14600	3.9	
0.74	15500	2286	14600	4.5	
0.36	34800	4669	8990	1.10	JRTK99R59DN63M4 JRTKF99R59DN63M4 JRTKA99R59DN63M4 JRTKAF99R59DN63M4
0.42	31300	4082	8990	1.20	
0.47	27200	3583	8990	1.40	
0.55	23900	3108	8990	1.60	
0.62	20400	2757	8990	1.85	
0.70	18800	2419	8990	2.0	JRTK99R59DN63M4 JRTKF99R59DN63M4 JRTKA99R59DN63M4 JRTKAF99R59DN63M4
0.80	16300	2123	8990	2.3	
0.92	14500	1856	8990	2.6	
1.1	12000	1625	8990	3.1	
1.2	10400	1430	8990	3.7	
1.4	9910	1261	8990	3.8	
1.5	8650	1102	8990	4.4	
1.8	7540	957	8990	5.0	
2.0	6740	855	8990	5.6	
2.3	5210	743	8990	7.3	
2.6	4690	652	8990	8.1	

Output speed n_a [r/min]	Output torque T_a lbf • in	Ratio i	Permitted overhung load F_{Ra} [1] lbf	Service factor f_B	Model
0.25HP					
0.55	23700	3107	6140	1.00	JRTK89R59DN63M4 JRTKF89R59DN63M4 JRTKA89R59DN63M4 JRTKAF89R59DN63M4
0.62	20000	2728	6240	1.20	
0.72	17600	2371	6300	1.35	
0.81	16400	2088	6330	1.45	JRTK89R59DN63M4 JRTKF89R59DN63M4 JRTKA89R59DN63M4 JRTKAF89R59DN63M4
0.92	14500	1854	6370	1.65	
1.0	13000	1657	6400	1.85	
1.2	11000	1415	6440	2.2	
1.4	9590	1229	6460	2.5	
1.6	8300	1078	6470	2.9	
1.8	7070	951	6490	3.4	
2.0	6080	837	6500	3.9	
2.3	5280	726	6510	4.5	
1.1	11900	1514	3740	1.15	JRTK79R39DN63M4 JRTKF79R39DN63M4 JRTKA79R39DN63M4 JRTKAF79R39DN63M4
1.2	10900	1388	3880	1.25	
1.4	9600	1218	4040	1.45	
1.6	8390	1053	4160	1.65	
1.8	7360	924	4240	1.85	
2.1	6490	815	4310	2.1	
2.4	5200	709	4390	2.6	
2.7	4560	622	4420	3.0	
3.1	4130	552	4440	3.3	
3.5	3620	485	4460	3.8	
4.0	3190	428	4470	4.3	
4.6	2840	367	4480	4.8	
2.1	6480	793	2480	1.10	JRTK69R39DN63M4 JRTKF69R39DN63M4 JRTKA69R39DN63M4 JRTKAF69R39DN63M4
2.4	5250	697	2680	1.40	
2.8	4620	613	2760	1.55	
3.1	4050	542	2830	1.80	
3.6	3750	471	2860	1.95	
4.0	3140	420	2910	2.3	
4.7	2830	361	2920	2.6	
5.3	2500	323	2920	2.9	
6.1	2080	279	2920	3.5	
3.1	4060	544	1940	1.30	JRTK59R39DN63M4 JRTKF59R39DN63M4 JRTKA59R39DN63M4 JRTKAF59R39DN63M4
3.6	3700	473	1980	1.45	
4.0	3140	421	2040	1.70	
4.7	2840	362	2070	1.85	
5.3	2490	319	2100	2.1	
6.1	2090	280	2140	2.5	
6.9	1840	246	2160	2.9	
7.9	1620	215	2180	3.3	
8.8	1440	192	2190	3.7	
10	1250	166	2200	4.2	
4.5	2800	375	1550	1.25	JRTK49R39DN63M4 JRTKF49R39DN63M4 JRTKA49R39DN63M4 JRTKAF49R39DN63M4
5.2	2570	327	1600	1.35	
5.9	2260	289	1670	1.55	
6.6	1910	256	1720	1.85	
7.6	1740	225	1750	2.0	
8.6	1480	198	1780	2.4	
9.9	1290	171	1800	2.7	
11	1150	153	1820	3.1	
13	1010	131	1830	3.5	

Output speed n_a [r/min]	Output torque T_a lbf • in	Ratio i	Permitted overhung load F_{Ra} [1] lbf	Service factor f_B	Model
0.25HP					
8.3	1620	205	1200	1.10	
9.4	1410	181	1250	1.25	JRTK39R19DN63M4 JRTKF39R19DN63M4 JRTKA39R19DN63M4 JRTKAF39R19DN63M4
11	1240	160	1290	1.40	
12	1040	136	1340	1.70	
13	1000	127	1350	1.75	
12	1340	144.79	2920	5.4	JRTK69DN63M4 JRTKF69DN63M4 JRTKA69DN63M4 JRTKAF69DN63M4
14	1140	123.54	2920	6.3	
16	1000	108.03	2920	7.2	
7.4	2130	144.79	2920	3.4	JRTK69DN71S6 JRTKF69DN71S6 JRTKA69DN71S6 JRTKAF69DN71S6
8.7	1820	123.54	2920	4.0	
9.9	1590	108.03	2920	4.6	
10	1510	102.62	2920	4.8	
12	1340	145.14	2200	3.9	
14	1140	123.85	2210	4.6	JRTK59DN63M4 JRTKF59DN63M4 JRTKA59DN63M4 JRTKAF59DN63M4
16	1000	108.29	2220	5.3	
17	950	102.88	2220	5.6	
19	830	90.26	2230	6.3	
22	705	76.56	2240	7.5	
7.4	2130	145.14	2130	2.5	
8.6	1820	123.85	2160	2.9	JRTK59DN71S6 JRTKF59DN71S6 JRTKA59DN71S6 JRTKAF59DN71S6
9.9	1590	108.29	2180	3.3	
10	1510	102.88	2180	3.5	
12	1320	90.26	2200	4.0	
13	1220	131.87	1810	2.9	
14	1120	121.48	1820	3.1	JRTK49DN63M4 JRTKF49DN63M4 JRTKA49DN63M4 JRTKAF49DN63M4
16	960	104.37	1830	3.7	
19	840	90.86	1840	4.2	
20	785	85.12	1840	4.5	
8.1	1940	131.87	1720	1.80	
8.8	1780	121.48	1740	2.0	JRTK49DN71S6 JRTKF49DN71S6 JRTKA49DN71S6 JRTKAF49DN71S6
10	1530	104.37	1780	2.3	
12	1330	90.86	1800	2.6	
13	1250	85.12	1810	2.8	
16	980	106.38	1350	1.80	
17	900	97.81	1370	1.95	
20	775	83.69	1400	2.3	
23	670	72.54	1390	2.6	JRTK39DN63M4 JRTKF39DN63M4 JRTKA39DN63M4 JRTKAF39DN63M4
25	625	67.80	1370	2.8	
29	540	58.60	1310	3.3	
34	460	49.79	1260	3.8	
38	410	44.46	1220	4.3	
45	350	37.97	1160	5.0	
10	1560	106.38	1220	1.15	JRTK39DN71S6 JRTKF39DN71S6 JRTKA39DN71S6 JRTKAF39DN71S6
11	1440	97.81	1250	1.25	
13	1230	83.69	1290	1.45	
15	1060	72.54	1330	1.65	
0.33HP					
0.17	98000	9819	18000	1.15	
0.20	83500	8443	18200	1.40	
0.23	74700	7482	18300	1.55	
0.26	65500	6565	18300	1.75	JRTK129R79DN71S4 JRTKF129R79DN71S4 JRTKA129R79DN71S4 JRTKAF129R79DN71S4
0.29	55400	5804	18400	2.1	
0.34	49000	5027	18500	2.3	
0.38	42200	4423	18500	2.7	
0.44	36800	3889	18500	3.1	
0.51	30500	3311	18600	3.8	

Output speed n_a [r/min]	Output torque T_a lbf • in	Ratio i	Permitted overhung load F_{Ra} [1] lbf	Service factor f_B	Model
0.33HP					
0.27	60300	6184	14600	1.15	
0.30	53500	5662	14600	1.30	
0.33	48600	5138	14600	1.45	
0.39	43100	4359	14600	1.65	JRTK109R79DN71S4 JRTKF109R79DN71S4 JRTKA109R79DN71S4 JRTKAF109R79DN71S4
0.45	37600	3810	14600	1.90	
0.51	32000	3358	14600	2.2	
0.57	29000	2977	14600	2.4	
0.65	25300	2599	14600	2.8	
0.74	21800	2286	14600	3.2	
0.88	18500	1939	14600	3.8	
0.99	17100	1713	14600	4.1	JRTK109R79DN71S4 JRTKF109R79DN71S4 JRTKA109R79DN71S4 JRTKAF109R79DN71S4
1.1	15500	1554	14600	4.5	
1.3	13300	1336	14600	5.3	
0.55	32400	3108	8990	1.15	JRTK99R59DN71S4 JRTKF99R59DN71S4 JRTKA99R59DN71S4 JRTKAF99R59DN71S4
0.62	28000	2757	8990	1.35	
0.70	25500	2419	8990	1.50	
0.80	22200	2123	8990	1.70	
0.92	19700	1856	8990	1.95	
1.1	16500	1625	8990	2.3	JRTK99R59DN71S4 JRTKF99R59DN71S4 JRTKA99R59DN71S4 JRTKAF99R59DN71S4
1.2	14300	1430	8990	2.6	
1.4	13400	1261	8990	2.8	
1.5	11700	1102	8990	3.2	
1.8	10200	957	8990	3.7	
2.0	9140	855	8990	4.2	
0.81	22100	2088	6180	1.10	
0.92	19700	1854	6250	1.20	
1.0	17600	1657	6310	1.35	
1.2	14900	1415	6360	1.60	
1.4	12900	1229	6400	1.85	JRTK89R59DN71S4 JRTKF89R59DN71S4 JRTKA89R59DN71S4 JRTKAF89R59DN71S4
1.6	11200	1078	6430	2.1	
1.8	9710	951	6460	2.5	
2.0	8400	837	6470	2.8	
2.3	7290	726	6490	3.3	
2.7	6510	638	6500	3.7	
1.6	11300	1053	3830	1.20	
1.8	9920	924	4000	1.40	
2.1	8750	815	4120	1.55	
2.4	7170	709	4260	1.90	
2.7	6290	622	4320	2.2	
3.1	5660	552	4360	2.4	
3.5	4960	485	4400	2.8	JRTK79R39DN71S4 JRTKF79R39DN71S4 JRTKA79R39DN71S4 JRTKAF79R39DN71S4
4.0	4380	428	4430	3.1	
4.6	3860	367	4450	3.5	
5.2	3420	328	4470	4.0	
5.9	3050	290	4480	4.5	
6.7	2590	252	4490	5.3	
7.7	2280	221	4490	6.0	
8.7	2010	195	4490	6.8	
9.7	1760	175	4490	7.8	

Output speed n_a [r/min]	Output torque T_a lbf • in	Ratio i	Permitted overhung load F_{Ra} [1)] lbf	Service factor f_B	Model
0.33HP					
2.8	6320	613	2510	1.15	
3.1	5560	542	2640	1.30	
3.6	5070	471	2710	1.45	JRTK69R39DN71S4 JRTKF69R39DN71S4 JRTKA69R39DN71S4 JRTKAF69R39DN71S4
4.0	4300	420	2800	1.70	
4.7	3840	361	2850	1.90	
5.3	3400	323	2890	2.1	
6.1	2860	279	2920	2.5	
6.9	2510	246	2920	2.9	
7.8	2220	217	2920	3.3	
4.0	4310	421	1910	1.25	
4.7	3850	362	1960	1.40	
5.3	3390	319	2010	1.55	
6.1	2860	280	2070	1.85	
6.9	2520	246	2100	2.1	JRTK59R39DN71S4 JRTKF59R39DN71S4 JRTKA59R39DN71S4 JRTKAF59R39DN71S4
7.9	2220	215	2130	2.4	
8.8	1970	192	2150	2.7	
10	1710	166	2170	3.1	
12	1490	145	2190	3.5	
13	1360	129	2200	3.9	
15	1140	111	2210	4.6	
17	1000	97	2220	5.3	
5.7	3630	192.18	4460	3.5	
6.1	3390	179.37	4470	3.8	JRTK79DN71M6 JRTKF79DN71M6 JRTKA79DN71M6 JRTKAF79DN71M6
7.1	2910	154.02	4480	4.7	
8.1	2550	135.28	4490	5.4	
7.6	2730	144.79	2920	2.6	
8.9	2330	123.54	2920	3.1	JRTK69DN71M6 JRTKF69DN71M6 JRTKA69DN71M6 JRTKAF69DN71M6
10	2040	108.03	2920	3.5	
11	1940	102.62	2920	3.7	
12	1770	144.79	2920	4.1	
14	1510	123.54	2920	4.8	JRTK69DN71S4 JRTKF69DN71S4 JRTKA69DN71S4 JRTKAF69DN71S4
16	1320	108.03	2920	5.5	
17	1250	102.62	2920	5.8	
7.6	2740	145.14	2080	1.95	
8.9	2340	123.85	2120	2.3	JRTK59DN71M6 JRTKF59DN71M6 JRTKA59DN71M6 JRTKAF59DN71M6
10	2040	108.29	2140	2.6	
11	1940	102.88	2150	2.7	
12	1700	90.26	2170	3.1	
14	1440	76.56	2190	3.7	
12	1770	145.14	2160	3.0	
14	1510	123.85	2180	3.5	
16	1320	108.29	2200	4.0	JRTK59DN71S4 JRTKF59DN71S4 JRTKA59DN71S4 JRTKAF59DN71S4
17	1250	102.88	2200	4.2	
19	1100	90.26	2210	4.8	
22	930	76.56	2230	5.7	
8.3	2490	131.87	1620	1.40	
9.1	2290	121.48	1660	1.55	JRTK49DN71M6 JRTKF49DN71M6 JRTKA49DN71M6 JRTKAF49DN71M6
11	1970	104.37	1720	1.80	
12	1710	90.86	1750	2.1	
13	1610	85.12	1770	2.2	
13	1610	131.87	1770	2.2	
14	1480	121.48	1780	2.4	JRTK49DN71S4 JRTKF49DN71S4 JRTKA49DN71S4 JRTKAF49DN71S4
16	1270	104.37	1800	2.8	
19	1110	90.86	1820	3.2	
20	1040	85.12	1820	3.4	

Output speed n_a [r/min]	Output torque T_a lbf • in	Ratio i	Permitted overhung load F_{Ra} [1)] lbf	Service factor f_B	Model
0.33HP					
13	1580	83.69	1210	1.10	
15	1370	72.54	1260	1.30	JRTK39DN71M6 JRTKF39DN71M6 JRTKA39DN71M6 JRTKAF39DN71M6
16	1280	67.80	1280	1.40	
19	1100	58.60	1320	1.60	
22	940	49.79	1360	1.90	
16	1300	106.38	1280	1.35	
17	1190	97.81	1300	1.50	
20	1020	83.69	1340	1.75	
23	880	72.54	1340	2.0	
25	820	67.80	1320	2.1	JRTK39DN71S4 JRTKF39DN71S4 JRTKA39DN71S4 JRTKAF39DN71S4
29	715	58.60	1270	2.5	
34	605	49.79	1220	2.9	
38	540	44.46	1190	3.2	
45	460	37.97	1140	3.8	
48	435	35.57	1120	4.1	
57	365	29.96	1070	4.8	
59	350	28.83	1060	5.0	
0.50HP					
0.26	103700	6565	17900	1.10	
0.29	89100	5804	18100	1.30	JRTK129R79DN71M4 JRTKF129R79DN71M4 JRTKA129R79DN71M4 JRTKAF129R79DN71M4
0.34	78200	5027	18200	1.45	
0.38	67900	4423	18300	1.70	
0.44	59400	3889	18400	1.95	
0.51	49800	3311	18500	2.3	
0.88	30300	1926	18600	3.8	JRTK129R79DN71M4 JRTKF129R79DN71M4 JRTKA129R79DN71M4 JRTKAF129R79DN71M4
0.97	27600	1757	18600	4.2	
1.1	23900	1541	18600	4.8	
0.45	59800	3810	14600	1.20	
0.51	51600	3358	14600	1.35	JRTK109R79DN71M4 JRTKF109R79DN71M4 JRTKA109R79DN71M4 JRTKAF109R79DN71M4
0.57	46300	2977	14600	1.55	
0.65	40400	2599	14600	1.75	
0.74	35100	2286	14600	2.0	
0.88	29800	1939	14600	2.4	
0.99	27200	1713	14600	2.6	
1.1	24700	1554	14600	2.9	JRTK109R79DN71M4 JRTKF109R79DN71M4 JRTKA109R79DN71M4 JRTKAF109R79DN71M4
1.3	21200	1336	14600	3.3	
1.5	18500	1166	14600	3.8	
0.80	34700	2123	8990	1.10	
0.92	30600	1856	8990	1.25	
1.1	26100	1625	8990	1.45	
1.2	22700	1430	8990	1.65	
1.4	20800	1261	8990	1.85	JRTK99R59DN71M4 JRTKF99R59DN71M4 JRTKA99R59DN71M4 JRTKAF99R59DN71M4
1.5	18100	1102	8990	2.1	
1.8	15900	957	8990	2.4	
2.0	14200	855	8990	2.7	
2.3	11600	743	8990	3.3	
2.6	10300	652	8990	3.7	
3.0	9380	573	8990	4.1	
1.2	23300	1415	6150	1.00	
1.4	20200	1229	6240	1.20	JRTK89R59DN71M4 JRTKF89R59DN71M4 JRTKA89R59DN71M4 JRTKAF89R59DN71M4
1.6	17600	1078	6310	1.35	
1.8	15300	951	6360	1.55	
2.0	13300	837	6400	1.80	
2.3	11500	726	6430	2.1	

Output speed n_a [r/min]	Output torque T_a lbf • in	Ratio i	Permitted overhung load F_{Ra} [1] lbf	Service factor f_B	Model
0.50HP					
2.7	10200	638	6450	2.3	JRTK89R59DN71M4 JRTKF89R59DN71M4 JRTKA89R59DN71M4 JRTKAF89R59DN71M4
3.0	8950	562	6470	2.7	
3.6	7520	474	6480	3.2	
4.0	6760	426	6490	3.5	
4.6	5900	373	6500	4.0	
2.1	13500	815	3480	1.00	JRTK79R39DN71M4 JRTKF79R39DN71M4 JRTKA79R39DN71M4 JRTKAF79R39DN71M4
2.4	11300	709	3830	1.20	
2.7	9950	622	4000	1.40	
3.1	8910	552	4110	1.55	
3.5	7820	485	4210	1.75	
4.0	6900	428	4280	2.0	
4.6	6020	367	4340	2.3	
5.2	5350	328	4380	2.6	
5.9	4760	290	4410	2.9	
6.7	4080	252	4440	3.4	
7.7	3580	221	4460	3.8	
8.7	3160	195	4470	4.3	
9.7	2790	175	4490	4.9	
11	2460	154	4490	5.6	
4.0	6770	420	2420	1.05	JRTK69R39DN71M4 JRTKF69R39DN71M4 JRTKA69R39DN71M4 JRTKAF69R39DN71M4
4.7	5990	361	2570	1.20	
5.3	5320	323	2670	1.35	
6.1	4500	279	2780	1.60	
6.9	3960	246	2840	1.85	
7.8	3510	217	2880	2.1	
8.9	3100	191	2920	2.3	
10	2650	166	2920	2.7	
12	2350	144	2920	3.1	
14	1990	122	2920	3.6	
6.1	4510	280	1870	1.20	JRTK59R39DN71M4 JRTKF59R39DN71M4 JRTKA59R39DN71M4 JRTKAF59R39DN71M4
6.9	3970	246	1950	1.35	
7.9	3500	215	2000	1.50	
8.8	3110	192	2040	1.70	
10	2690	166	2080	1.95	
12	2350	145	2110	2.2	
13	2130	129	2130	2.5	
15	1800	111	2160	2.9	
17	1580	97	2180	3.3	
5.6	5650	197.37	6500	4.2	JRTK89DN80M6 JRTKF89DN80M6 JRTKA89DN80M6 JRTKAF89DN80M6
6.3	4990	174.19	6510	4.8	
7.1	4410	154.02	4430	3.1	JRTK79DN80M6 JRTKF79DN80M6 JRTKA79DN80M6 JRTKAF79DN80M6
8.1	3870	135.28	4450	3.5	
8.6	3680	128.52	4460	3.7	
9.7	3250	113.56	4470	4.2	
8.8	3560	192.18	4460	3.6	JRTK79DN71M4 JRTKF79DN71M4 JRTKA79DN71M4 JRTKAF79DN71M4
9.5	3320	179.37	4470	3.9	
11	2850	154.02	4480	4.8	
8.9	3540	123.54	2880	2.0	JRTK69DN80M6 JRTKF69DN80M6 JRTKA69DN80M6 JRTKAF69DN80M6
10	3090	108.03	2920	2.3	
11	2940	102.62	2920	2.5	
12	2580	90.04	2920	2.8	

Output speed n_a [r/min]	Output torque T_a lbf • in	Ratio i	Permitted overhung load F_{Ra} [1] lbf	Service factor f_B	Model
0.50HP					
12	2680	144.79	2920	2.7	JRTK69DN71M4 JRTKF69DN71M4 JRTKA69DN71M4 JRTKAF69DN71M4
14	2290	123.54	2920	3.2	
16	2000	108.03	2920	3.6	
19	1660	90.04	2920	4.3	
22	1410	76.37	2920	5.1	
8.9	3540	123.85	1990	1.50	JRTK59DN80M6 JRTKF59DN80M6 JRTKA59DN80M6 JRTKAF59DN80M6
10	3100	108.29	2040	1.70	
11	2940	102.88	2060	1.80	
12	2580	90.26	2090	2.0	
14	2190	76.56	2130	2.4	
16	1980	69.12	2150	2.7	
12	2690	145.14	2080	1.95	JRTK59DN71M4 JRTKF59DN71M4 JRTKA59DN71M4 JRTKAF59DN71M4
14	2290	123.85	2120	2.3	
16	2000	108.29	2140	2.6	
17	1900	102.88	2150	2.8	
19	1670	90.26	2170	3.2	
22	1410	76.56	2190	3.7	
25	1280	69.12	2200	4.1	
11	2990	104.37	1500	1.20	JRTK49DN80M6 JRTKF49DN80M6 JRTKA49DN80M6 JRTKAF49DN80M6
12	2600	90.86	1600	1.35	
13	2430	85.12	1630	1.45	
15	2150	75.20	1690	1.65	
13	2440	131.87	1630	1.45	JRTK49DN71M4 JRTKF49DN71M4 JRTKA49DN71M4 JRTKAF49DN71M4
14	2250	121.48	1670	1.55	
16	1930	104.37	1720	1.85	
19	1680	90.86	1760	2.1	
20	1570	85.12	1770	2.2	
23	1390	75.20	1790	2.5	
24	1290	69.84	1800	2.7	
27	1170	63.30	1810	3.0	
17	1810	97.81	1160	1.00	JRTK39DN71M4 JRTKF39DN71M4 JRTKA39DN71M4 JRTKAF39DN71M4
20	1550	83.69	1220	1.15	
23	1340	72.54	1240	1.30	
25	1250	67.80	1220	1.40	
29	1080	58.60	1190	1.65	
34	920	49.79	1150	1.90	
38	820	44.46	1120	2.1	
45	700	37.97	1080	2.5	
48	655	35.57	1070	2.7	
57	555	29.96	1020	3.2	
59	530	28.83	1010	3.3	
68	460	24.99	980	3.8	
73	430	23.36	960	4.0	
84	370	20.19	820	4.4	
99	315	17.15	880	5.0	
0.75HP					
0.10	389800	16978	42700	1.15	JRTK189R99DN80S4 JRTKH189R99DN80S4
0.12	321900	14272	42700	1.35	
0.13	291400	13116	42700	1.50	
0.15	252300	11647	42700	1.75	
0.23	165600	7343	42700	2.7	
0.15	265700	11573	33700	1.05	JRTK169R99DN80S4 JRTKH169R99DN80S4
0.16	235600	10264	33700	1.20	
0.20	194600	8628	33700	1.45	
0.26	148000	6562	33700	1.90	
0.32	116000	5355	33700	2.4	
0.41	90600	4079	33700	3.1	

Output speed n_a [r/min]	Output torque T_a lbf • in	Ratio i	Permitted overhung load F_{Ra} [1] lbf	Service factor f_B	Model
0.75HP					
0.25	155200	6881	25300	1.05	JRTK159R99DN80S4
0.28	133700	5931	25500	1.20	JRTKF159R99DN80S4
0.42	89700	3979	25900	1.75	JRTKA159R99DN80S4
0.55	68800	3051	26000	2.3	JRTKAF159R99DN80S4
0.38	106400	4423	17900	1.10	
0.43	93200	3889	18100	1.25	JRTK129R79DN80S4
0.51	78600	3311	18200	1.45	JRTKF129R79DN80S4
0.56	71000	3009	18300	1.60	JRTKA129R79DN80S4
0.65	60800	2607	18400	1.90	JRTKAF129R79DN80S4
0.88	47300	1926	18500	2.4	
0.96	43100	1757	18500	2.7	JRTK129R79DN80S4
1.1	37500	1541	18500	3.1	JRTKF129R79DN80S4
1.3	32900	1342	18500	3.5	JRTKA129R79DN80S4
1.4	28600	1177	18600	4.0	JRTKAF129R79DN80S4
1.6	25100	1025	18600	4.6	
0.57	72200	2977	14600	1.00	JRTK109R79DN80S4
0.65	63100	2599	14600	1.10	JRTKF109R79DN80S4
0.74	55000	2286	14600	1.30	JRTKA109R79DN80S4
0.87	46600	1939	14600	1.50	JRTKAF109R79DN80S4
0.99	42300	1713	14600	1.65	
1.1	38400	1554	14600	1.85	
1.3	33000	1336	14600	2.1	
1.4	28800	1166	14600	2.5	JRTK109R79DN80S4
1.6	24600	1030	14600	2.9	JRTKF109R79DN80S4
1.9	23100	904	14600	3.3	JRTKA109R79DN80S4
2.1	19400	793	14600	3.6	JRTKAF109R79DN80S4
2.4	16900	696	14600	4.2	
2.8	14500	615	14600	4.9	
1.2	35300	1430	8990	1.05	
1.3	31900	1261	8990	1.20	
1.5	27900	1102	8990	1.35	
1.8	24400	957	8990	1.55	
2.0	21800	855	8990	1.75	JRTK99R59DN80S4
2.3	18100	743	8990	2.1	JRTKF99R59DN80S4
2.6	16000	652	8990	2.4	JRTKA99R59DN80S4
3.0	14400	573	8990	2.6	JRTKAF99R59DN80S4
3.4	12200	504	8990	3.1	
3.9	10500	437	8990	3.6	
4.4	9450	382	8990	4.0	
5.5	7630	305	8990	5.0	
1.8	23600	951	6140	1.00	
2.0	20700	837	6230	1.15	
2.3	17900	726	6300	1.35	
2.6	15900	638	6340	1.50	
3.0	13900	562	6390	1.70	
3.6	11700	474	6430	2.0	JRTK89R59DN80S4
4.0	10500	426	6440	2.3	JRTKF89R59DN80S4
4.5	9220	373	6460	2.6	JRTKA89R59DN80S4
5.1	8030	330	6480	3.0	JRTKAF89R59DN80S4
5.8	7160	294	6490	3.3	
6.8	6250	250	6500	3.8	
7.2	5880	236	6500	4.1	
8.4	4970	201	6510	4.8	

Output speed n_a [r/min]	Output torque T_a lbf • in	Ratio i	Permitted overhung load F_{Ra} [1] lbf	Service factor f_B	Model
0.75HP					
3.5	12000	485	3720	1.15	
4.0	10600	428	3910	1.30	
4.6	9250	367	4070	1.50	
5.2	8230	328	4170	1.65	
5.8	7310	290	4250	1.85	JRTK79R39DN80S4
6.7	6300	252	4320	2.2	JRTKF79R39DN80S4
7.6	5530	221	4370	2.5	JRTKA79R39DN80S4
8.7	4880	195	4400	2.8	JRTKAF79R39DN80S4
9.7	4320	175	4430	3.2	
11	3810	154	4450	3.6	
6.1	6960	279	2380	1.05	
6.9	6120	246	2540	1.20	
7.8	5450	217	2650	1.35	JRTK69R39DN80S4
8.8	4790	191	2740	1.50	JRTKF69R39DN80S4
10	4120	166	2820	1.75	JRTKA69R39DN80S4
12	3630	144	2870	2.0	JRTKAF69R39DN80S4
14	3080	122	2920	2.4	
8.8	4800	192	1820	1.10	
10	4150	166	1920	1.30	
12	3640	145	1980	1.45	JRTK59R39DN80S4
13	3280	129	2020	1.60	JRTKF59R39DN80S4
15	2780	111	2070	1.90	JRTKA59R39DN80S4
17	2450	97	2110	2.2	JRTKAF59R39DN80S4
5.7	8330	197.37	6470	2.9	
6.4	7350	174.19	6490	3.2	JRTK89DN90S6
6.8	6930	164.34	6490	3.4	JRTKF89DN90S6
7.6	6220	147.32	6500	3.8	JRTKA89DN90S6
7.3	6500	154.02	4310	2.1	JRTKAF89DN90S6
8.3	5710	135.28	4360	2.4	JRTK79DN90S6
8.7	5420	128.52	4370	2.5	JRTKF79DN90S6
9.9	4790	113.56	4410	2.9	JRTKA79DN90S6
11	4300	154.02	4430	3.2	JRTKAF79DN90S6
12	3780	135.28	4450	3.6	
13	3590	128.52	4460	3.8	JRTK79DN80S4
15	3170	113.56	4470	4.3	JRTKF79DN80S4
17	2710	97.05	4490	5.0	JRTKA79DN80S4
9.1	5210	123.54	2690	1.40	JRTKAF79DN80S4
10	4560	108.03	2770	1.60	
11	4330	102.62	2800	1.65	JRTK69DN90S6
12	3800	90.04	2850	1.90	JRTKF69DN90S6
15	3220	76.37	2910	2.2	JRTKA69DN90S6
14	3450	123.54	2890	2.1	JRTKAF69DN90S6
16	3020	108.03	2920	2.4	
19	2510	90.04	2920	2.9	JRTK69DN80S4
22	2130	76.37	2920	3.4	JRTKF69DN80S4
10	4570	108.29	1860	1.15	JRTKA69DN80S4
11	4340	102.88	1900	1.20	JRTKAF69DN80S4
12	3810	90.26	1970	1.40	
15	3230	76.56	2030	1.65	JRTK59DN90S6
16	2910	69.12	2060	1.80	JRTKF59DN90S6
18	2560	60.81	2090	2.1	JRTKA59DN90S6
20	2420	57.42	2110	2.2	JRTKAF59DN90S6

Output speed n_a [r/min]	Output torque T_a lbf • in	Ratio i	Permitted overhung load F_{Ra} [1] lbf	Service factor f_B	Model
0.75HP					
14	3460	123.85	2000	1.55	
16	3030	108.29	2050	1.75	
16	2870	102.88	2060	1.85	JRTK59DN80S4
19	2520	90.26	2100	2.1	JRTKF59DN80S4
22	2140	76.56	2130	2.5	JRTKA59DN80S4
24	1930	69.12	2150	2.7	JRTKAF59DN80S4
28	1700	60.81	2170	3.1	
29	1600	57.42	2180	3.3	
16	2920	104.37	1520	1.20	
19	2540	90.86	1610	1.40	
20	2380	85.12	1640	1.50	
22	2100	75.20	1700	1.70	JRTK49DN80S4
24	1950	69.84	1720	1.80	JRTKF49DN80S4
27	1770	63.30	1750	2.0	JRTKA49DN80S4
30	1590	56.83	1770	2.2	JRTKAF49DN80S4
35	1360	48.95	1790	2.6	
37	1280	46.03	1800	2.8	
29	1630	58.60	1060	1.10	
34	1390	49.79	1040	1.25	
38	1240	44.46	1030	1.40	
44	1060	37.97	1000	1.65	
48	990	35.57	990	1.80	
56	830	29.96	960	2.1	JRTK39DN80S4
59	800	28.83	950	2.2	JRTKF39DN80S4
68	695	24.99	920	2.5	JRTKA39DN80S4
72	650	23.36	910	2.6	JRTKAF39DN80S4
84	560	20.19	880	2.9	
99	480	17.15	850	3.3	
110	425	15.31	820	3.6	
129	365	13.08	790	4.0	
139	335	12.14	775	4.2	
161	290	10.49	745	4.8	
1.0HP					
0.13	387200	13116	42700	1.15	
0.15	337300	11647	42700	1.30	
0.24	219300	7343	42700	2.0	JRTK189R99DN80M4
0.26	199200	6747	42700	2.2	JRTKH189R99DN80M4
0.29	173500	5991	42700	2.5	
0.33	151900	5358	42700	2.9	
0.20	257700	8628	33700	1.10	
0.27	196000	6562	33700	1.45	
0.33	155000	5355	33700	1.85	JRTK169R99DN80M4
0.37	135800	4788	33700	2.1	JRTKH169R99DN80M4
0.43	120400	4079	33700	2.4	
0.52	100800	3376	33700	2.8	
0.35	140700	5074	25400	1.15	
0.39	125200	4514	25600	1.25	
0.44	118800	3979	25700	1.35	JRTK159R99DN80M4
0.50	99700	3516	25800	1.60	JRTKH159R99DN80M4
0.57	91100	3051	25900	1.75	JRTKA159R99DN80M4
0.67	72400	2610	26000	2.2	JRTKAF159R99DN80M4
0.75	64400	2322	26000	2.5	

Output speed n_a [r/min]	Output torque T_a lbf • in	Ratio i	Permitted overhung load F_{Ra} [1] lbf	Service factor f_B	Model
1.0HP					
1.1	50100	1659	26100	3.2	JRTK159R99DN80M4
1.3	40000	1365	26100	4.0	JRTKH159R99DN80M4
					JRTKA159R99DN80M4
					JRTKAF159R99DN80M4
0.53	103000	3311	18000	1.10	
0.58	93100	3009	18100	1.25	JRTK129R79DN80M4
0.67	80000	2607	18200	1.45	JRTKH129R79DN80M4
0.77	69000	2268	18300	1.65	JRTKA129R79DN80M4
					JRTKAF129R79DN80M4
0.91	61700	1926	18400	1.85	
1.0	56200	1757	18400	2.0	
1.1	49000	1541	18500	2.3	JRTK129R79DN80M4
1.3	42900	1342	18500	2.7	JRTKH129R79DN80M4
1.5	37400	1177	18500	3.1	JRTKA129R79DN80M4
1.7	32800	1025	18500	3.5	JRTKAF129R79DN80M4
1.9	28600	899	18600	4.0	
0.90	60900	1939	14600	1.15	JRTK109R79DN80M4
					JRTKH109R79DN80M4
					JRTKA109R79DN80M4
					JRTKAF109R79DN80M4
1.0	55100	1713	14600	1.30	
1.1	50000	1554	14600	1.40	
1.3	43000	1336	14600	1.65	
1.5	37500	1166	14600	1.90	JRTK109R79DN80M4
1.7	32200	1030	14600	2.2	JRTKF109R799DN80M4
1.9	28000	904	14600	2.5	JRTKA109R79DN80M4
2.2	25300	793	14600	2.8	JRTKAF109R79DN80M4
2.5	22100	696	14600	3.2	
2.9	19100	615	14600	3.7	
1.6	36100	1102	8990	1.05	
1.8	31600	957	8990	1.20	
2.0	28200	855	8990	1.35	
2.4	23700	743	8990	1.60	
2.7	20900	652	8990	1.80	
3.1	18800	573	8990	2.0	JRTK99R59DN80M4
3.5	16000	504	8990	2.4	JRTKF99R59DN80M4
4.0	13800	437	8990	2.8	JRTKA99R59DN80M4
4.6	12300	382	8990	3.1	JRTKAF99R59DN80M4
5.7	9930	305	8990	3.8	
6.8	8360	258	8990	4.5	
7.5	7520	232	8990	5.0	
8.8	6400	199	8990	5.9	
2.4	23300	726	6150	1.00	
2.7	20600	638	6230	1.15	
3.1	18000	562	6290	1.30	
3.7	15200	474	6360	1.55	
4.1	13700	426	6390	1.75	JRTK89R59DN80M4
4.7	12000	373	6420	2.0	JRTKF89R59DN80M4
5.3	10400	330	6440	2.3	JRTKA89R59DN80M4
6.0	9370	294	6460	2.5	JRTKAF89R59DN80M4
7.0	8140	250	6480	2.9	
7.4	7660	236	6480	3.1	
8.7	6490	201	6500	3.7	
4.8	11900	367	3730	1.15	JRTK79R39DN80M4
5.3	10600	328	3910	1.30	JRTKF79R39DN80M4
6.0	9480	290	4050	1.45	JRTKA79R39DN80M4
					JRTKAF79R39DN80M4



Output speed n_a [r/min]	Output torque T_a lbf • in	Ratio i	Permitted overhung load F_{Ra} [1] lbf	Service factor f_B	Model
1.0HP					
7.0	8180	252	4180	1.70	
7.9	7180	221	4260	1.90	JRTK79R39DN80M4
9.0	6330	195	4320	2.2	JRTKF79R39DN80M4
10	5630	175	4360	2.4	JRTKA79R39DN80M4 JRTKAF79R39DN80M4
11	4960	154	4400	2.8	
8.1	7080	217	2350	1.00	
9.1	6210	191	2530	1.15	JRTK69R39DN80M4
11	5360	166	1670	1.35	JRTKF69R39DN80M4 JRTKA69R39DN80M4
12	4720	144	2750	1.55	JRTKAF69R39DN80M4
14	4000	122	2830	1.80	
12	4730	145	1830	1.10	
14	4250	129	1910	1.25	JRTK59R39DN80M4 JRTKF59R39DN80M4
16	3620	111	1990	1.45	JRTKA59R39DN80M4 JRTKAF59R39DN80M4
18	3180	97	2030	1.65	
18	3260	99	1420	1.10	JRTK49R39DN80M4 JRTKF49R39DN80M4
19	3090	94	1480	1.15	JRTKA49R39DN80M4 JRTKAF49R39DN80M4
6.7	9420	174.19	6460	2.5	
7.1	8880	164.34	6470	2.7	JRTK89DN90S6 JRTKF89DN90S6
7.9	7960	147.32	6480	3.0	JRTKA89DN90S6 JRTKAF89DN90S6
9.2	6860	126.91	6490	3.5	
8.9	7100	197.37	6490	3.4	
10	6260	174.19	6500	3.8	JRTK89DN80M4 JRTKF89DN80M4
11	5910	164.34	6500	4.0	JRTKA89DN80M4 JRTKAF89DN80M4
12	5300	147.32	6510	4.5	
8.6	7310	135.28	4250	1.85	
9.1	6950	128.52	4280	1.95	JRTK79DN90S6 JRTKF79DN90S6
10	6140	113.56	4330	2.2	JRTKA79DN90S6 JRTKAF79DN90S6
12	5240	97.05	4380	2.6	
13	4810	88.97	4410	2.9	
11	5540	154.02	4370	2.5	
13	4860	135.28	4400	2.8	JRTK79DN80M4 JRTKF79DN80M4
14	4620	128.52	4420	3.0	JRTKA79DN80M4 JRTKAF79DN80M4
15	4080	113.56	4440	3.4	
18	3490	97.05	4460	3.9	
11	5840	108.03	2590	1.25	
11	5550	102.62	2640	1.30	
13	4860	90.04	2730	1.50	
15	4130	76.37	2820	1.75	JRTK69DN90S6
17	3720	68.95	2860	1.95	JRTKF69DN90S6 JRTKA69DN90S6
19	3280	60.66	2900	2.2	JRTKAF69DN90S6
20	3090	57.28	2920	2.3	
24	2630	48.77	2920	2.8	
26	2390	44.32	2920	3.0	
14	4440	123.54	2790	1.65	
16	3880	108.03	2850	1.85	
17	3690	102.62	2860	1.95	JRTK69DN80M4
19	3230	90.04	2900	2.2	JRTKF69DN80M4
23	2740	76.37	2920	2.6	JRTKA69DN80M4 JRTKAF69DN80M4
25	2480	68.95	2920	2.9	
29	2180	60.66	2920	3.3	
31	2060	57.28	2920	3.5	

Output speed n_a [r/min]	Output torque T_a lbf • in	Ratio i	Permitted overhung load F_{Ra} [1] lbf	Service factor f_B	Model
1.0HP					
13	4880	90.26	1800	1.10	
15	4140	76.56	1930	1.30	
17	3730	69.12	1970	1.40	
19	3280	60.18	2020	1.60	JRTK59DN90S6
20	3100	57.42	2040	1.70	JRTKF59DN90S6 JRTKA59DN90S6
24	2640	48.89	2090	2.0	JRTKAF59DN90S6
26	2400	44.43	2110	2.2	
30	2080	38.49	2140	2.5	
33	1930	35.70	2150	2.8	
14	4450	123.85	1890	1.20	
16	3890	108.29	1960	1.35	
17	3700	102.88	1980	1.45	
19	3240	90.26	2030	1.65	JRTK59DN80M4
23	2750	76.56	2080	1.95	JRTKF59DN80M4 JRTKA59DN80M4
25	2480	69.12	2100	2.1	JRTKAF59DN80M4
29	2180	60.81	2130	2.4	
30	2060	57.42	2140	2.6	
36	1750	48.89	2170	3.0	
39	1590	44.43	2180	3.3	
18	3420	63.30	1370	1.05	
20	3070	56.83	1480	1.15	
24	2640	48.95	1590	1.35	
25	2480	46.03	1620	1.40	
29	2140	39.61	1690	1.65	JRTK49DN90S6
33	1910	35.39	1730	1.85	JRTKF49DN90S6 JRTKA49DN90S6
37	1690	31.30	1760	2.1	JRTKAF49DN90S6
40	1580	29.32	1740	2.2	
45	1400	25.91	1690	2.5	
48	1300	24.06	1660	2.7	
53	1170	21.81	1620	3.0	
19	3260	90.86	1420	1.10	
21	3060	85.12	1480	1.15	
23	2700	75.20	1570	1.30	
25	2510	69.84	1620	1.40	
28	2270	63.30	1660	1.55	JRTK49DN80M4 JRTKF49DN80M4
31	2040	56.83	1700	1.75	JRTKA49DN80M4 JRTKAF49DN80M4
36	1760	48.95	1750	2.0	
38	1650	46.03	1750	2.1	
44	1420	39.61	1700	2.5	
49	1270	35.39	1650	2.8	
56	1120	31.30	1610	3.1	
39	1620	29.96	930	1.10	
47	1350	24.99	920	1.30	
50	1260	23.36	910	1.35	
58	1090	20.19	890	1.50	JRTK39DN90S6
68	920	17.15	870	1.70	JRTKF39DN90S6
76	820	15.31	850	1.85	JRTKA39DN90S6 JRTKAF39DN90S6
89	705	13.08	830	2.1	
96	655	12.14	820	2.2	
111	565	10.49	790	2.5	
131	480	8.91	760	2.9	

Output speed n_a [r/min]	Output torque T_a lbf • in	Ratio i	Permitted overhung load F_{Ra} [1] lbf	Service factor f_B	Model
1.0HP					
39	1590	44.46	930	1.10	
46	1360	37.97	920	1.30	
49	1270	35.57	910	1.40	
58	1070	29.96	890	1.65	
61	1030	28.83	890	1.70	
70	890	24.99	870	1.95	
75	840	23.36	860	2.0	
87	725	20.19	830	2.2	JRTK39DN80M4 JRTKF39DN80M4 JRTKA39DN80M4 JRTKAF39DN80M4
102	615	17.15	800	2.6	
114	550	15.31	785	2.8	
134	470	13.08	755	3.1	
144	435	12.14	745	3.2	
167	375	10.49	715	3.8	
196	320	8.91	685	4.4	
220	285	7.96	665	4.8	
1.5HP					
0.19	412100	9363	42700	1.05	
0.22	350400	8126	42700	1.25	
0.24	338800	7343	42700	1.30	
0.26	309000	6747	42700	1.45	JRTK189R99DN90S4 JRTKH189R99DN90S4
0.29	271000	5991	42700	1.65	
0.33	239100	5358	42700	1.85	
0.37	212000	4817	42700	2.1	
0.40	192300	4370	42700	2.3	
0.49	170300	3609	42700	2.6	JRTK189R99DN90S4 JRTKH189R99DN90S4
0.33	242200	5355	33700	1.15	
0.37	213700	4788	33700	1.30	
0.43	186800	4079	33700	1.50	JRTK169R99DN90S4 JRTKH169R99DN90S4
0.52	155700	3376	33700	1.80	
0.64	124600	2755	33700	2.3	
0.81	102900	2182	33700	2.8	
1.0	78900	1704	33700	3.6	JRTK169R99DN90S4 JRTKH169R99DN90S4
1.2	65700	1408	33700	4.3	
1.4	60000	1296	33700	4.7	
0.50	156900	3516	25200	1.00	JRTK159R99DN90S4 JRTKF159R99DN90S4 JRTKA159R99DN90S4 JRTKAF159R99DN90S4
0.58	140800	3051	25400	1.15	
0.68	114800	2610	25700	1.40	
0.76	102200	2322	25800	1.55	
1.1	77400	1659	26000	2.1	
1.3	62500	1365	26100	2.5	JRTK159R99DN90S4 JRTKF159R99DN90S4 JRTKA159R99DN90S4 JRTKAF159R99DN90S4
1.4	55500	1229	26100	2.9	
1.6	49400	1093	26100	3.2	
1.9	42500	942	26100	3.7	
2.1	38000	854	26200	4.2	
0.78	105900	2268	17900	1.10	JRTK129R79DN90S4 JRTKF129R79DN90S4 JRTKA129R79DN90S4 JRTKAF129R79DN90S4
0.91	93400	1926	18100	1.25	JRTK129R79DN90S4 JRTKF129R79DN90S4 JRTKA129R79DN90S4 JRTKAF129R79DN90S4
1.0	85200	1757	18200	1.35	
1.1	74400	1541	18300	1.55	
1.3	65000	1342	18400	1.75	

Output speed n_a [r/min]	Output torque T_a lbf • in	Ratio i	Permitted overhung load F_{Ra} [1] lbf	Service factor f_B	Model
1.5HP					
1.5	56800	1177	18400	2.0	
1.7	49700	1025	18500	2.3	
2.0	43400	899	18500	2.6	JRTK129R79DN90S4 JRTKF129R79DN90S4 JRTKA129R79DN90S4 JRTKAF129R79DN90S4
2.2	37100	790	18500	3.1	
2.5	33800	704	18500	3.4	
2.9	29000	610	18600	4.0	
3.2	26200	549	18600	4.4	
3.7	22400	477	18600	5.1	
1.3	65000	1336	14600	1.10	
1.5	56700	1166	14600	1.25	
1.7	49200	1030	14600	1.45	
1.9	42900	904	14600	1.65	
2.2	38400	793	14600	1.85	
2.5	33600	696	14600	2.1	JRTK109R79DN90S4 JRTKF109R79DN90S4 JRTKA109R79DN90S4 JRTKAF109R79DN90S4
2.9	29200	615	14600	2.4	
3.4	24800	522	14600	2.9	
3.8	21700	461	14600	3.2	
4.3	19100	408	14600	3.7	
4.8	17400	364	14600	4.1	
5.5	15200	318	14600	4.6	
2.4	35900	743	8990	1.05	
2.7	31600	652	8990	1.20	
3.1	28300	573	8990	1.35	
3.5	24300	504	8990	1.55	JRTK99R59DN90S4 JRTKF99R59DN90S4 JRTKA99R59DN90S4 JRTKAF99R59DN90S4
4.0	21000	437	8990	1.80	
4.6	18600	382	8990	2.0	
5.2	16300	342	8990	2.3	
5.8	15000	305	8990	2.5	
3.7	23000	474	6160	1.05	
4.1	20700	426	6230	1.15	
4.7	18200	373	6290	1.30	
5.3	15900	330	6340	1.50	JRTK89R59DN90S4 JRTKF89R59DN90S4 JRTKA89R59DN90S4 JRTKAF89R59DN90S4
6.0	14200	294	6380	1.70	
7.0	12300	250	6420	1.95	
7.5	11600	236	6430	2.1	
8.8	9840	201	6450	2.4	
9.6	8920	183	6470	2.7	
7.0	12300	252	3680	1.10	
8.0	10800	221	3890	1.25	JRTK79R39DN90S4 JRTK79R39DN90S4 JRTKA79R39DN90S4 JRTKAF79R39DN90S4
9.0	9550	195	4040	1.45	
10	8500	175	4150	1.60	
11	7500	154	4230	1.85	
12	7120	144	2350	1.00	JRTK69R39DN90S4 JRTK69R39DN90S4 JRTKA69R39DN90S4 JRTKAF69R39DN90S4
14	6030	122	2560	1.20	
7.7	12200	153.21	8990	3.1	JRTK99DN90L6
8.4	11200	140.28	8990	3.4	JRTKF99DN90L6 JRTKA99DN90L6
9.6	9900	123.93	8990	3.8	JRTKAF99DN90L6
10	9440	176.05	8990	4.0	JRTK99DN90S4
12	8210	153.21	8990	4.6	JRTKF99DN90S4 JRTKA99DN90S4
13	7520	140.28	8990	5.1	JRTKAF99DN90S4

Output speed n_a [r/min]	Output torque T_a lbf • in	Ratio i	Permitted overhung load F_{Ra} [1] lbf	Service factor f_B	Model
1.5HP					
9.3	10100	126.91	6450	2.4	JRTK89DN90L6 JRTKF89DN90L6 JRTKA89DN90L6 JRTKAF89DN90L6
8.9	10500	197.37	6440	2.3	
10	9340	174.19	6460	2.6	
11	8810	164.34	6470	2.7	JRTK89DN90S4 JRTKF89DN90S4
12	7900	147.32	6480	3.0	JRTKA89DN90S4 JRTKAF89DN90S4
14	6800	126.91	6490	3.5	
15	6210	115.82	6500	3.9	
12	7750	97.05	4210	1.75	JRTK79DN90L6 JRTKF79DN90L6 JRTKA79DN90L6 JRTKAF79DN90L6
11	8260	154.02	4170	1.65	
13	7250	135.28	4250	1.90	
14	6890	128.52	4280	2.0	
16	6090	113.56	4340	2.2	JRTK79DN90S4 JRTKF79DN90S4
18	5200	97.05	4390	2.6	JRTKA79DN90S4 JRTKAF79DN90S4
20	4770	88.97	4410	2.9	
23	4180	78.07	4440	3.3	
24	3960	73.99	4450	3.5	
14	6620	123.54	2450	1.10	
16	5790	108.03	2600	1.25	
17	5500	102.62	2640	1.30	
20	4820	90.04	2740	1.50	
23	4090	76.37	2820	1.75	JRTK69DN90S4 JRTKF69DN90S4
26	3690	68.95	2860	1.95	JRTKA69DN90S4 JRTKAF69DN90S4
29	3250	60.66	2900	2.2	
31	3070	57.28	2920	2.4	
36	2610	48.77	2920	2.8	
40	2370	44.32	2920	3.0	
46	2050	38.39	2920	3.4	
20	4840	90.26	1810	1.10	
23	4100	76.56	1930	1.30	
25	3700	69.12	1980	1.45	
29	3260	60.81	2030	1.65	
31	3070	57.42	2040	1.70	
36	2620	48.89	2090	2.0	
40	2380	44.43	2110	2.2	
46	2060	38.49	2140	2.6	
49	1910	35.70	2150	2.8	
58	1620	30.28	2070	3.3	
64	1460	27.34	2020	3.6	JRTK59DN90S4
73	1290	24.05	1950	4.1	JRTKF59DN90S4
78	1210	22.71	1920	4.4	JRTKA59DN90S4
91	1030	19.34	1840	4.9	JRTKAF59DN90S4
100	940	17.57	1790	5.2	
116	810	15.22	1720	5.8	
133	710	13.25	1660	6.3	
148	635	11.92	1590	5.7	
157	600	11.26	1570	6.1	
184	510	9.59	1500	7.0	
202	465	8.71	1460	7.4	
234	400	7.55	1390	8.0	
268	350	6.57	1340	8.7	
376	250	4.69	1210	11	

Output speed n_a [r/min]	Output torque T_a lbf • in	Ratio i	Permitted overhung load F_{Ra} [1] lbf	Service factor f_B	Model
1.5HP					
28	3390	63.30	1380	1.05	
31	3040	56.83	1490	1.15	
36	2620	48.95	1590	1.35	
38	2460	46.03	1590	1.45	
44	2120	39.61	1560	1.65	JRTK49DN90S4
50	1890	35.39	1530	1.85	JRTKF49DN90S4
56	1670	31.30	1500	2.1	JRTKA49DN90S4
60	1570	29.32	1480	2.2	JRTKAF49DN90S4
68	1380	25.91	1440	2.5	
73	1290	24.06	1420	2.7	
81	1160	21.81	1390	3.0	
90	1050	19.58	1350	3.4	
59	1600	29.96	765	1.10	
61	1540	28.83	765	1.15	
71	1340	24.99	760	1.30	
75	1250	23.36	760	1.40	
87	1080	20.19	745	1.50	
103	920	17.15	730	1.75	
115	820	15.31	720	1.90	JRTK39DN90S4
135	700	13.08	700	2.1	JRTKF39DN90S4
145	650	12.14	690	2.2	JRTKA39DN90S4
168	560	10.49	675	2.5	JRTKAF39DN90S4
198	475	8.91	650	3.0	
221	425	7.96	635	3.2	
259	360	6.80	610	3.6	
277	340	6.37	600	3.8	
329	285	5.36	575	4.3	
443	210	3.98	530	5.2	
2.0HP					
0.26	419000	6747	42700	1.05	
0.29	368700	5991	42700	1.20	JRTK189R99DN90L4
0.33	326400	5358	42700	1.35	JRTKH189R99DN90L4
0.37	290500	4817	42700	1.50	
0.40	263600	4370	42700	1.70	
0.49	229800	3609	42700	1.90	
0.58	193400	3062	42700	2.3	JRTK189R99DN90L4
0.70	156900	2519	42700	2.8	JRTKH189R99DN90L4
0.78	139800	2268	42700	3.2	
0.43	253300	4079	33700	1.10	JRTK169R99DN90L4
0.52	210800	3376	33700	1.35	JRTKH169R99DN90L4
0.64	169500	2755	33700	1.65	
0.81	138900	2182	33700	2.0	
1.0	107100	1704	33700	2.6	JRTK169R99DN90L4
1.3	88900	1408	33700	3.2	JRTKH169R99DN90L4
1.4	81400	1296	33700	3.5	
0.76	140000	2322	25400	1.15	JRTK159R99DN90L4 JRTKF159R99DN90L4 JRTKA159R99DN90L4 JRTKAF159R99DN90L4
1.1	104800	1659	25800	1.50	
1.3	85000	1365	25900	1.85	
1.4	75800	1229	26000	2.1	JRTK159R99DN90L4
1.6	67400	1093	26000	2.4	JRTKF159R99DN90L4
1.9	58100	942	26100	2.7	JRTKA159R99DN90L4
2.1	52100	854	26100	3.1	JRTKAF159R99DN90L4
3.1	34000	567	26200	4.7	
3.5	30300	504	26200	5.2	
3.3	33200	536	18500	3.5	JRTK129R89DN90L4
4.2	26100	418	18600	4.4	JRTKF129R89DN90L4
4.8	23100	367	18600	5.0	JRTKA129R89DN90L4 JRTKAF129R89DN90L4

Output speed n_a [r/min]	Output torque T_a lbf • in	Ratio i	Permitted overhung load F_{Ra} [1] lbf	Service factor f_B	Model
2.0HP					
1.0	114200	1757	17800	1.00	
1.1	99900	1541	18000	1.15	
1.3	87200	1342	18100	1.30	
1.5	76300	1177	18300	1.50	
1.7	66600	1025	18300	1.75	JRTK129R79DN90L4
2.0	58200	899	18400	1.95	JRTKF129R79DN90L4
2.2	50200	790	18500	2.3	JRTKA129R79DN90L4
2.5	45400	704	18500	2.5	JRTKAF129R79DN90L4
2.9	39100	610	18500	2.9	
3.2	35300	549	18500	3.3	
3.7	30300	477	18600	3.8	
4.2	26900	418	18600	4.3	
1.7	66200	1030	14600	1.05	
2.0	57800	904	14600	1.20	
2.2	51500	793	14600	1.35	
2.5	45000	696	14600	1.55	JRTK109R79DN90L4
2.9	39400	615	14600	1.80	JRTKF109R79DN90L4
3.4	33400	522	14600	2.1	JRTKA109R79DN90L4
3.8	29300	461	14600	2.4	JRTKAF109R79DN90L4
4.3	25900	408	14600	2.7	
4.9	23400	364	14600	3.0	
5.6	20500	318	14600	3.5	
3.1	37900	573	8990	1.00	
3.5	32600	504	8990	1.15	
4.0	28200	437	8990	1.35	
4.6	24900	382	8990	1.55	JRTK99R59DN90L4
5.2	22000	342	8990	1.75	JRTKF99R59DN90L4
5.8	20100	305	8990	1.90	JRTKA99R59DN90L4
6.9	16900	258	8990	2.2	JRTKAF99R59DN90L4
7.6	15200	232	8990	2.5	
8.9	13000	199	8990	2.9	
5.4	21300	330	6210	1.10	
6.0	19100	294	6270	1.25	
7.1	16400	250	6330	1.45	JRTK89R59DN90L4
7.5	15500	236	6350	1.55	JRTKF89R59DN90L4
8.8	13100	201	6400	1.80	JRTKA89R59DN90L4
9.7	11900	183	6420	2.0	JRTKAF89R59DN90L4
11	10300	159	6450	2.3	
13	9170	141	6460	2.5	
9.1	12700	195	3620	1.05	JRTK79R39DN90L4
10	11300	175	3820	1.20	JRTKF79R39DN90L4
11	10000	154	3990	1.35	JRTKA79R39DN90L4 JRTKAF79R39DN90L4
7.7	16300	153.21	8990	2.3	JRTK99DN100L6
8.4	14900	140.28	8990	2.5	JRTKF99DN100L6
9.5	13200	123.93	8990	2.9	JRTKA99DN100L6 JRTKAF99DN100L6
10	12500	176.05	8990	3.0	
12	10900	153.21	8990	3.5	JRTK99DN90L4
13	10000	140.28	8990	3.8	JRTKF99DN90L4
14	8830	123.93	8990	4.3	JRTKA99DN90L4 JRTKAF99DN90L4
9.3	13500	126.91	6390	1.75	JRTK89DN100L6
10	12300	115.82	6410	1.95	JRTKF89DN100L6
12	10900	102.71	6440	2.2	JRTKA89DN100L6 JRTKAF89DN100L6
10	12400	174.19	6410	1.90	
11	11700	164.34	6420	2.0	
12	10500	147.32	6440	2.3	JRTK89DN90L4
14	9050	126.91	6460	2.6	JRTKF89DN90L4
15	8250	115.82	6480	2.9	JRTKA89DN90L4 JRTKAF89DN90L4
17	7320	102.71	6490	3.3	
20	6150	86.34	6500	3.9	
12	10300	97.05	3950	1.30	JRTK79DN100L6
13	9490	88.97	4050	1.45	JRTKF79DN100L6
15	8330	78.07	4160	1.65	JRTKA79DN100L6 JRTKAF79DN100L6

Output speed n_a [r/min]	Output torque T_a lbf • in	Ratio i	Permitted overhung load F_{Ra} [1] lbf	Service factor f_B	Model
2.0HP					
13	9640	135.28	4030	1.40	
14	9160	128.52	4080	1.50	
16	8090	113.56	4180	1.70	
18	6920	97.05	4280	2.0	
20	6340	88.97	4320	2.2	JRTK79DN90L4
23	5560	78.07	4370	2.5	JRTKF79DN90L4
24	5270	73.99	4380	2.6	JRTKA79DN90L4
27	4610	64.75	4420	3.0	JRTKAF79DN90L4
30	4160	58.34	4440	3.3	
35	3640	51.18	4460	3.8	
39	3220	45.16	4470	4.3	
44	2850	40.04	4480	4.8	
20	6420	90.04	2490	1.15	
23	5440	76.37	2650	1.35	
26	4910	68.95	2730	1.50	
29	4320	60.66	2800	1.70	
31	4080	57.28	2830	1.80	JRTK69DN90L4
36	3470	48.77	2880	2.1	JRTKF69DN90L4
40	3160	44.32	2910	2.3	JRTKA69DN90L4
46	2730	38.39	2920	2.6	JRTKAF69DN90L4
50	2530	35.62	2920	2.9	
58	2150	30.22	2920	3.4	
65	1940	27.28	2920	3.7	
74	1710	24.00	2920	4.1	
26	4920	69.12	1790	1.10	
29	4330	60.81	1900	1.20	
31	4090	57.42	1930	1.30	
36	3480	48.89	2000	1.50	
40	3160	44.43	2040	1.70	JRTK59DN90L4
46	2740	38.49	2070	1.95	JRTKF59DN90L4
49	2540	35.70	2040	2.1	JRTKA59DN90L4
58	2150	30.28	1980	2.5	JRTKAF59DN90L4
65	1940	27.34	1930	2.7	
73	1710	24.05	1880	3.1	
78	1610	22.71	1850	3.3	
91	1370	19.34	1780	3.7	
38	3280	46.03	1420	1.10	
45	2820	39.61	1420	1.25	
50	2520	35.39	1410	1.40	
56	2230	31.30	1390	1.60	
60	2090	29.32	1380	1.70	
68	1840	25.91	1350	1.90	JRTK49DN90L4
73	1710	24.06	1330	2.1	JRTKF49DN90L4
81	1550	21.81	1310	2.3	JRTKA49DN90L4
90	1390	19.58	1290	2.5	JRTKAF49DN90L4
105	1200	16.86	1250	2.8	
111	1130	15.86	1230	3.0	
129	970	13.65	1190	3.3	
145	860	12.19	1160	3.6	
150	830	11.77	1140	3.0	
76	1660	23.36	660	1.05	
88	1430	20.19	665	1.15	
103	1220	17.15	660	1.30	
115	1090	15.31	655	1.40	
135	930	13.08	645	1.55	
146	860	12.14	640	1.65	JRTK39DN90L4
168	745	10.49	630	1.90	JRTKF39DN90L4
198	635	8.91	615	2.2	JRTKA39DN90L4
222	565	7.96	600	2.4	JRTKAF39DN90L4
260	480	6.80	580	2.7	
278	150	6.37	575	2.8	
329	380	5.36	555	3.2	
444	280	3.98	515	3.9	



Output speed n_a [r/min]	Output torque T_a lbf • in	Ratio i	Permitted overhung load F_{Ra} [1)] lbf	Service factor f_B	Model
3.0HP					
0.40	408600	4370	42700	1.10	JRTK189R99DN100S4
0.63	254900	2818	42700	1.75	JRTKH189R99DN100S4
0.49	351000	3609	42700	1.25	
0.58	296300	3062	42700	1.50	
0.70	241500	2519	42700	1.85	
0.78	216000	2268	42700	2.0	JRTK189R99DN100S4 JRTKH189R99DN100S4
0.86	194300	2054	42700	2.3	
0.97	170700	1821	42700	2.6	
1.1	151900	1605	42700	2.9	
0.64	260900	2755	33700	1.10	JRTK169R99DN100S4
0.78	207800	2263	33700	1.35	JRTKH169R99DN100S4
0.81	212200	2182	33700	1.35	
1.0	164300	1704	33700	1.70	
1.2	136200	1408	33700	2.1	JRTK169R99DN100S4
1.4	124900	1296	33700	2.3	JRTKH169R99DN100S4
1.6	103200	1101	33700	2.7	
1.9	89300	944	33700	3.2	
1.1	160500	1659	25200	1.00	
1.3	130800	1365	25500	1.20	
1.4	117000	1229	25700	1.35	JRTK159R99DN100S4
1.6	104100	1093	25800	1.55	JRTKF159R99DN100S4
1.9	89700	942	25900	1.75	JRTKA159R99DN100S4
2.1	80700	854	26000	1.95	JRTKAF159R99DN100S4
2.3	69200	756	26000	2.3	
3.1	53100	567	26100	3.0	
3.3	51100	536	18500	2.2	
3.7	44600	473	18500	2.6	JRTK129R89DN100S4
4.2	40300	418	18500	2.9	JRTKF129R89DN100S4
4.8	35400	367	18500	3.2	JRTKA129R89DN100S4
5.3	31700	330	18600	3.6	JRTKAF129R89DN100S4
1.7	101000	1025	18000	1.15	
2.0	88400	899	18100	1.30	
2.2	76700	790	18200	1.50	
2.5	69000	704	18300	1.65	JRTK129R79DN100S4
2.9	59600	610	18400	1.95	JRTKF129R79DN100S4
3.2	53700	549	18400	2.1	JRTKA129R79DN100S4
3.7	46300	477	18500	2.5	JRTKAF129R79DN100S4
4.2	40900	418	18500	2.8	
2.5	68400	696	14600	1.05	
2.9	60000	615	14600	1.20	
3.4	50900	522	14600	1.40	
3.8	44800	461	14600	1.60	JRTK109R79DN100S4
4.3	39600	408	14600	1.80	JRTKF109R79DN100S4
4.8	35600	364	14600	2.0	JRTKA109R79DN100S4
5.5	31100	318	14600	2.3	JRTKAF109R79DN100S4
6.2	28000	286	14600	2.5	
7.0	24500	251	14600	2.9	
4.6	37700	382	8990	1.00	
5.2	33500	342	8990	1.15	JRTK99R59DN100S4
5.8	30400	305	8990	1.25	JRTKF99R59DN100S4
6.8	25600	258	8990	1.50	JRTKA99R59DN100S4
7.6	23100	232	8990	1.65	JRTKAF99R59DN100S4
8.8	19800	199	8990	1.90	

Output speed n_a [r/min]	Output torque T_a lbf • in	Ratio i	Permitted overhung load F_{Ra} [1)] lbf	Service factor f_B	Model
3.0HP					
7.5	23500	236	6140	1.00	
8.8	20000	201	6250	1.20	JRTK89R59DN100S4
9.6	18100	183	6290	1.30	JRTKF89R59DN100S4
11	15700	159	6350	1.50	JRTKA89R59DN100S4
13	13900	141	6380	1.65	JRTKAF89R59DN100S4
9.5	19800	123.93	8990	1.90	JRTK99DN112M6 JRTKF99DN112M6
11	16800	105.13	8990	2.3	JRTKA99DN112M6 JRTKAF99DN112M6
10	18800	176.05	8990	2.0	
12	16400	153.21	8990	2.3	JRTK99DN100S4
13	15000	140.28	8990	2.5	JRTKF99DN100S4
14	13200	123.93	8990	2.9	JRTKA99DN100S4
17	11200	105.13	8990	3.4	JRTKAF99DN100S4
18	10300	96.80	8990	3.7	
12	15800	147.32	6350	1.50	
14	13600	126.91	6390	1.75	
15	12400	115.82	6410	1.90	JRTK89DN100S4
17	11000	102.71	6440	2.2	JRTKF89DN100S4
20	9260	86.34	6460	2.6	JRTKA89DN100S4
22	8510	79.34	6470	2.8	JRTKAF89DN100S4
25	7550	70.46	6480	3.2	
28	6750	63.00	6490	3.5	
16	12100	113.56	3710	1.15	
18	10400	97.05	3940	1.30	
20	9540	88.97	4040	1.45	
23	8370	78.07	4160	1.65	
24	7930	73.99	4200	1.75	
27	6940	64.75	4280	1.95	JRTK79DN100S4
30	6250	58.34	4320	2.2	JRTKF79DN100S4
34	5490	51.18	4370	2.5	JRTKA79DN100S4
39	4840	45.16	4410	2.8	JRTKAF79DN100S4
44	4290	40.04	4430	3.2	
50	3770	35.20	4450	3.6	
57	3310	30.89	4470	4.1	
60	3130	29.27	4480	4.4	
69	2740	25.62	4490	5.0	
29	6500	60.66	2470	1.10	
31	6140	57.28	2540	1.20	
36	5230	48.77	2680	1.40	
40	4750	44.32	2750	1.55	
46	4110	38.39	2820	1.70	
49	3820	35.62	2850	1.90	JRTK69DN100S4
58	3240	30.22	2900	2.2	JRTKF69DN100S4
65	2920	27.28	2920	2.5	JRTKA69DN100S4
73	2570	24.00	2920	2.8	JRTKAF69DN100S4
78	2430	22.66	2920	2.8	
91	2060	19.30	2920	3.2	
101	1880	17.54	2920	3.5	
116	1620	15.19	2920	3.8	
133	1410	13.22	2920	4.2	
141	1330	12.48	2920	3.5	

Output speed n_a [r/min]	Output torque T_a lbf • in	Ratio i	Permitted overhung load F_{Ra} [1] lbf	Service factor f_B	Model
3.0HP					
166	1140	10.63	2920	3.9	JRTK69DN100S4 JRTKF69DN100S4 JRTKA69DN100S4 JRTKAF69DN100S4
182	1030	9.66	2910	4.1	
211	890	8.37	2800	4.3	
242	780	7.28	2700	4.8	
339	555	5.20	2460	5.5	
36	5240	48.89	1730	1.00	JRTK59DN100S4 JRTKF59DN100S4 JRTKA59DN100S4 JRTKAF59DN100S4
40	4760	44.43	1830	1.10	
46	4120	38.49	1850	1.30	
49	3820	35.70	1830	1.40	
58	3240	30.28	1800	1.65	
64	2930	27.34	1770	1.80	
73	2580	24.05	1740	2.1	
78	2430	22.71	1720	2.2	
91	2070	19.34	1670	2.5	
100	1880	17.57	1640	2.6	
116	1630	15.22	1590	2.9	
133	1420	13.25	1540	3.2	
148	1270	11.92	1470	2.9	
157	1200	11.26	1450	3.0	
68	2770	25.91	1170	1.25	JRTK49DN100S4 JRTKF49DN100S4 JRTKA49DN100S4 JRTKAF49DN100S4
81	2330	21.81	1160	1.50	
90	2100	19.58	150	1.70	
104	1800	16.86	1130	1.85	
111	1700	15.86	1120	2.0	
129	1460	13.65	1100	2.2	
145	1300	12.19	1080	2.4	
150	1260	11.77	1060	1.95	
167	1130	10.56	1040	2.2	
194	970	9.10	1010	2.5	
206	910	8.56	990	2.6	
239	785	7.36	960	2.8	
135	1400	13.08	540	1.05	JRTK39DN100S4 JRTKF39DN100S4 JRTKA39DN100S4 JRTKAF39DN100S4
168	1120	10.49	545	1.25	
198	950	8.91	540	1.50	
221	850	7.96	535	1.60	
259	725	6.80	525	1.80	
277	680	6.37	520	1.90	
329	575	5.36	510	2.1	
443	425	3.98	480	2.6	
4.0HP					
0.63	347700	2818	42700	1.25	JRTK189R99DN100L4 JRTKH189R99DN100L4
0.58	398200	3062	42700	1.10	JRTK189R99DN100L4 JRTKH189R99DN100L4
0.70	325400	2519	42700	1.35	
0.78	291600	2268	42700	1.50	
0.86	262700	2054	42700	1.70	
0.97	231300	1821	42700	1.90	
1.1	205300	1605	42700	2.1	
1.3	174300	1395	42700	2.5	
1.5	151900	1196	42700	2.9	

Output speed n_a [r/min]	Output torque T_a lbf • in	Ratio i	Permitted overhung load F_{Ra} [1] lbf	Service factor f_B	Model
4.0HP					
1.0	221100	1704	33700	1.30	JRTK169R99DN100L4 JRTKH169R99DN100L4
1.2	193100	1408	33700	1.55	
1.4	168100	1296	33700	1.70	
1.6	139800	1101	33700	2.0	
1.9	120800	944	33700	2.3	
2.1	105300	843	33700	2.7	
2.3	95500	757	33700	3.0	
1.4	158000	1229	25200	1.00	JRTK159R99DN100L4 JRTKF159R99DN100L4 JRTKA159R99DN100L4 JRTKAF159R99DN100L4
1.6	140500	1093	25400	1.15	
1.9	121100	942	25600	1.30	
2.1	109200	854	25700	1.45	
2.3	94400	756	25900	1.70	
3.1	71900	567	26000	2.2	
3.5	64000	504	26100	2.5	
3.3	69000	536	18300	1.65	JRTK129R89DN100L4 JRTKF129R89DN100L4 JRTKA129R89DN100L4 JRTKAF129R89DN100L4
3.7	60400	473	18400	1.90	
4.2	54400	418	18400	2.1	
4.8	47700	367	18500	2.4	
5.3	42700	330	18500	2.7	
6.2	36500	287	18500	3.1	
2.2	103100	790	18000	1.10	JRTK129R79DN100L4 JRTKF129R79DN100L4 JRTKA129R79DN100L4 JRTKAF129R79DN100L4
2.5	92500	704	18100	1.25	
2.9	79900	610	18200	1.45	
3.2	72000	549	18300	1.60	
3.7	62200	477	18400	1.85	
4.2	54900	418	18400	2.1	
3.8	60100	461	14600	1.20	JRTK109R79DN100L4 JRTKF109R79DN100L4 JRTKA109R79DN100L4 JRTKAF109R79DN100L4
4.3	53200	408	14600	1.35	
4.8	47700	364	14600	1.50	
5.5	41700	318	14600	1.70	
6.2	37500	286	14600	1.90	
7.0	32900	251	14600	2.1	
8.0	28900	222	14600	2.4	
9.0	25600	196	14600	2.8	
10	22900	174	14600	2.8	
11	20200	154	14600	3.1	
13	18400	140	14600	3.5	
6.8	34300	258	8990	1.10	JRTK99R59DN100L4 JRTKF99R59DN100L4 JRTKA99R59DN100L4 JRTKAF99R59DN100L4
7.6	30900	232	8990	1.25	
8.8	26500	199	8990	1.45	
8.2	30600	143.47	14600	2.3	JRTK109DN132S6 JRTKF109DN132S6 JRTKA109DN132S6 JRTKAF109DN132S6
9.7	25900	121.46	14600	2.7	
10	24000	112.41	14600	2.9	
12	21500	100.75	14600	3.3	
12	20500	143.47	14600	3.5	JRTK109DN100L4 JRTKF109DN100L4 JRTKA109DN100L4 JRTKAF109DN100L4
15	17300	121.46	14600	4.1	
9.5	26500	123.93	8990	1.45	JRTK99DN132S6 JRTKF99DN132S6 JRTKA99DN132S6 JRTKAF99DN132S6
11	22400	105.13	8990	1.70	
12	20700	96.80	8990	1.85	
14	18500	86.52	8990	2.1	

Output speed n_a [r/min]	Output torque T_a lbf • in	Ratio i	Permitted overhung load F_{Ra} [1] lbf	Service factor f_B	Model
4.0HP					
10	25100	176.05	8990	1.50	
12	21900	153.21	8990	1.75	
13	20000	140.28	8990	1.90	
14	17700	123.93	8990	2.1	JRTK99DN100L4
17	15000	105.13	8990	2.5	JRTKF99DN100L4
18	13800	96.80	8990	2.8	JRTKA99DN100L4
20	12300	86.52	8990	3.1	JRTKAF99DN100L4
23	11100	77.89	8990	3.4	
25	10000	70.54	8990	3.8	
28	8940	62.55	8990	4.3	
31	8080	56.55	8990	4.7	
12	21000	147.32	6220	1.15	
14	18100	126.91	6290	1.30	
15	16500	115.82	6330	1.45	
17	14600	102.71	6370	1.65	
20	12300	86.34	6410	1.95	JRTK89DN100L4
22	11300	79.34	6430	2.1	JRTKF89DN100L4
25	10000	70.46	6450	2.4	JRTK89DN100L4
28	9000	63.00	6470	2.6	JRTAKF89DN100L4
31	8090	56.64	6480	3.0	
36	7020	49.16	6490	3.4	
40	6290	44.02	6330	3.7	
48	5220	36.52	6060	4.2	
20	12700	88.97	3620	1.10	
23	11100	78.07	3850	1.25	
24	10500	73.99	3920	1.30	
27	9250	64.75	4070	1.50	
30	8330	58.34	4160	1.65	JRTK79DN100L4
34	7310	51.18	4250	1.85	JRTKF79DN100L4
39	6450	45.16	4310	2.1	JRTKA79DN100L4
44	5720	40.04	4360	2.4	JRTKAF79DN100L4
50	5030	35.20	4400	2.7	
57	4410	30.89	4430	3.1	
40	6330	44.32	2510	1.15	
46	5480	38.39	2650	1.30	
50	5090	35.62	2700	1.45	
58	4310	30.22	2800	1.70	
65	3890	27.28	2840	1.85	
73	3420	24.00	2890	2.1	JRTS69DN100L4
78	3230	22.66	2900	2.1	JRTSF69DN100L4
91	2750	19.30	2920	2.4	JRTSA69DN100L4
101	2500	17.54	2920	2.6	JRTSAF69DN100L4
116	2170	15.19	2920	2.9	
133	1880	13.22	2920	3.1	
141	1780	12.48	2920	2.6	
166	1510	10.63	2910	2.9	
183	1380	9.66	2850	3.1	
58	4320	30.28	1620	1.25	
64	3900	27.34	1610	1.35	JRTK59DN100L4
73	3430	24.05	1590	1.55	JRTKF59DN100L4
78	3240	22.71	1580	1.65	JRTKA59DN100L4
91	2760	19.34	1550	1.85	JRTKAF59DN100L4
100	2510	17.57	1530	1.95	
116	2170	15.22	1500	2.2	

Output speed n_a [r/min]	Output torque T_a lbf • in	Ratio i	Permitted overhung load F_{Ra} [1] lbf	Service factor f_B	Model
4.0HP					
133	1890	13.25	1460	2.4	
148	1700	11.92	1390	2.1	
157	1600	11.26	1380	2.3	
184	1370	9.59	1330	2.6	JRTK59DN100L4
202	1240	8.71	1310	2.8	JRTKF59DN100L4
234	1070	7.55	1270	3.0	JRTKA59DN100L4
268	930	6.57	1230	3.2	JRTKAF59DN100L4
376	670	4.69	1130	4.0	
90	2790	19.58	1020	1.25	
105	2410	16.86	1020	1.40	
111	2260	15.86	1010	1.50	
129	1950	13.65	1000	1.65	
145	1740	12.19	990	1.80	
150	1680	11.77	970	1.45	
167	1510	10.56	960	1.65	JRTK49DN100L4
194	1300	9.10	940	1.90	JRTKF49DN100L4
206	1220	8.56	930	1.95	JRTKA49DN100L4
239	1050	7.36	910	2.1	JRTKAF49DN100L4
268	940	6.58	890	2.3	
303	830	5.81	870	2.5	
380	660	4.64	830	2.7	
198	1270	8.91	465	1.10	
222	1130	7.96	470	1.20	
259	970	6.80	470	1.35	JRTK39DN100L4
277	910	6.37	470	1.40	JRTKF39DN100L4
329	765	5.36	465	1.60	JRTKA39DN100L4
443	565	3.98	450	1.95	JRTKAF39DN100L4
5.0HP					
0.62	441900	2818	42700	1.00	JRTK189R99DN100L4 JRTKH189R99DN100L4
0.70	410700	2519	42700	1.10	
0.78	368300	2268	42700	1.20	
0.86	332300	2054	42700	1.35	
0.97	293000	1821	42700	1.50	JRTK189R99DN100L4
1.1	259700	1605	42700	1.70	JRTKH189R99DN100L4
1.3	221500	1395	42700	2.0	
1.5	192400	1196	42700	2.3	
1.7	168200	1046	42700	2.6	
1.9	151300	945	42700	2.9	
1.0	278700	1704	33700	1.00	
1.2	230700	1408	33700	1.25	
1.4	212000	1296	33700	1.35	
1.6	177100	1101	33700	1.60	JRTK169R99DN100L4
1.9	152700	944	33700	1.85	JRTKH169R99DN100L4
2.1	133900	843	33700	2.1	
2.3	121200	757	33700	2.3	
2.8	101700	632	33700	2.8	
1.9	15300	942	25300	1.05	
2.1	138100	854	25500	1.15	
2.3	120000	756	25600	1.35	JRTK159R99DN100L4
3.1	91100	567	25900	1.75	JRTKF159R99DN100L4
3.5	81100	504	26000	1.95	JRTKA159R99DN100L4
4.0	68900	434	26000	2.3	JRTKAF159R99DN100L4

Output speed n_a [r/min]	Output torque T_a lbf in	Ratio i	Permitted overhung load F_{Ra} [1] lbf	Service factor f_B	Model
5.0HP					
3.3	87100	536	18100	1.30	
3.7	76400	473	18300	1.50	
4.2	68700	418	18300	1.65	JRTK129R89DN100L4 JRTKF129R89DN100L4 JRTKA129R89DN100L4 JRTKAF129R89DN100L4
4.8	60100	367	18400	1.90	
5.3	53900	330	18400	2.1	
6.1	46200	287	18500	2.5	
6.9	40900	253	18500	2.8	
2.5	116300	704	17800	1.00	
2.9	100600	610	18000	1.15	JRTK129R79DN100L4 JRTKF129R79DN100L4 JRTKA129R79DN100L4 JRTKAF129R79DN100L4
3.2	90600	549	18100	1.25	
3.7	78400	477	18200	1.45	
4.2	69000	418	18300	1.65	
4.3	67000	408	14600	1.05	
4.8	60000	364	14600	1.20	
5.5	52500	318	14600	1.35	
6.1	47200	286	14600	1.50	JRTK109R79DN100L4 JRTKF109R79DN100L4 JRTKA109R79DN100L4 JRTKAF109R79DN100L4
7.0	41400	251	14600	1.70	
7.9	36400	222	14600	1.95	
8.9	32200	196	14600	2.2	
10	28800	174	14600	2.2	
11	25500	154	14600	2.5	
13	23100	140	14600	2.8	
7.6	38800	232	8990	1.00	JRTK99R59DN100L4 JRTKF99R59DN100L4 JRTKA99R59DN100L4 JRTKAF99R59DN100L4
8.8	33300	199	8990	1.15	
12	25700	143.47	14600	2.8	JRTK109DN100L4 JRTKF109DN100L4 JRTKA109DN100L4 JRTKAF109DN100L4
14	21700	121.46	14600	3.2	
10.0	31500	176.05	8990	1.20	
11	24700	153.21	8990	1.40	
13	25100	140.28	8990	1.50	
14	22200	123.93	8990	1.70	
17	18800	105.13	8990	2.0	JRTK99DN100L4 JRTKF99DN100L4 JRTKA99DN100L4 JRTKAF99DN100L4
18	17300	96.80	8990	2.2	
20	15500	86.52	8990	2.5	
23	13900	77.89	8990	2.7	
25	12600	70.54	8990	3.0	
28	11200	62.55	8990	3.4	
31	10100	56.55	8990	3.8	
14	22700	126.91	6170	1.05	
15	20700	115.81	6230	1.15	
17	18400	102.71	6290	1.30	
20	15400	86.34	6350	1.55	JRTK89DN100L4 JRTKF89DN100L4 JRTKA89DN100L4 JRTKAF89DN100L4
22	14200	79.34	6380	1.70	
25	12600	70.46	6410	1.90	
28	11200	63.00	6430	2.1	
31	10100	56.64	6450	2.4	
36	8800	49.16	6310	2.7	
40	7880	44.02	6170	2.9	
48	6540	36.52	5930	3.4	
23	13900	78.07	3410	1.00	JRTK79DN100L4 JRTKF79DN100L4 JRTKA79DN100L4 JRTKAF79DN100L4
24	13200	73.99	3540	1.05	
27	11600	64.75	3790	1.20	
30	10400	58.34	3940	1.30	

Output speed n_a [r/min]	Output torque T_a lbf in	Ratio i	Permitted overhung load F_{Ra} [1] lbf	Service factor f_B	Model
5.0HP					
34	9170	51.18	4080	1.50	
39	8090	45.16	4180	1.70	
44	7170	40.04	4260	1.90	JRTK79DN100L4 JRTKF79DN100L4 JRTKA79DN100L4 JRTKAF79DN100L4
46	6870	38.39	4280	1.95	
50	6300	35.20	4320	2.2	
57	5530	30.89	4370	2.5	
60	5240	29.27	4380	2.6	
69	4580	25.62	4420	3.0	
46	6870	38.39	2400	1.05	
49	6380	35.62	2500	1.15	
58	5410	30.22	2660	1.35	
64	4880	27.28	2730	1.50	
73	4290	24.00	2800	1.65	
78	4050	22.66	2830	1.70	JRTK69DN100L4 JRTKF69DN100L4 JRTKA69DN100L4 JRTKAF69DN100L4
91	3450	19.30	2890	1.95	
100	3140	17.54	2910	2.1	
116	2720	15.19	2920	2.3	
133	2360	13.22	2920	2.5	
141	2230	12.48	2920	2.1	
165	1900	10.63	2850	2.3	
182	1730	9.66	2790	2.5	
210	1490	8.37	2700	2.6	
241	1300	7.28	2610	2.9	
58	5420	30.28	1440	1.00	
64	4890	27.34	1450	1.10	
73	4310	24.05	1450	1.25	
77	4060	22.71	1450	1.30	
91	3460	19.34	1440	1.45	JRTK59DN100L4 JRTKF59DN100L4 JRTKA59DN100L4 JRTKAF59DN100L4
100	3140	17.57	1430	1.55	
115	2720	15.22	1410	1.75	
133	2370	13.25	1380	1.90	
147	2130	11.92	1310	1.70	
156	2010	11.26	1300	1.80	
183	1710	9.59	1270	2.1	
202	1560	8.71	1250	2.2	
233	1350	7.55	1220	2.4	
268	1170	6.57	1180	2.6	
375	840	4.69	1100	3.2	
90	3500	19.58	880	1.00	
104	3020	16.86	900	1.10	
111	2840	15.86	900	1.20	
129	2440	13.65	910	1.30	
144	2180	12.19	910	1.40	
149	2100	11.77	880	1.15	JRTK49DN100L4 JRTKF49DN100L4 JRTKA49DN100L4 JRTKAF49DN100L4
166	1890	10.56	880	1.30	
193	1630	9.10	870	1.50	
205	1530	8.56	870	1.55	
239	1310	7.36	850	1.70	
267	1170	6.58	840	1.80	
302	1040	5.81	830	1.95	
379	830	4.64	795	2.2	





Output speed n_a [r/min]	Output torque T_a lbf in	Ratio i	Permitted overhung load F_{Ra} [1] lbf	Service factor f_B	Model
5.0HP					
259	1210	6.80	415	1.10	JRTK39DN100L4 JRTKF39DN100L4 JRTKA39DN100L4 JRTKAF39DN100L4
276	1140	6.37	415	1.10	
328	960	5.36	420	1.30	
442	710	3.98	415	1.55	
394	800	8.91	420	1.75	JRTK39DN100L2 JRTKF39DN100L2 JRTKA39DN100L2 JRTKAF39DN100L2
441	710	7.96	415	1.90	
516	610	6.80	410	2.2	
551	570	6.37	410	2.2	
654	480	5.36	400	2.6	
882	355	3.98	380	3.1	
5.4HP					
2.1	140900	835	42700	3.1	JRTK189R109DN112M4 JRTKH189R109DN112M4
3.4	88600	520	42700	5.0	
0.70	441600	2519	42700	1.00	JRTK189R99DN112M4 JRTKH189R99DN112M4
0.78	396100	2268	42700	1.10	
0.86	357400	2054	42700	1.25	
0.97	315300	1821	42700	1.40	
1.1	279300	1605	42700	1.60	
1.3	238600	1395	42700	1.85	
1.5	207100	1196	42700	2.1	
1.7	181000	1046	42700	2.4	
1.9	162900	945	42700	2.7	
1.3	247900	1408	33700	1.15	JRTK169R99DN112M4 JRTKH169R99DN112M4
1.4	227800	1296	33700	1.25	
1.6	190600	1101	33700	1.50	
1.9	164300	944	33700	1.70	
2.1	144200	843	33700	1.95	
2.3	130400	757	33700	2.2	
2.8	109400	632	33700	2.6	
2.1	148500	854	25300	1.05	JRTK159R99DN112M4 JRTKF159R99DN112M4 JRTKA159R99DN112M4 JRTKAF159R99DN112M4
2.3	129300	756	25600	1.25	
3.1	98000	567	25800	1.60	
3.5	87200	504	25900	1.80	
4.1	74200	434	26000	2.1	
5.3	56900	333	26100	2.8	
3.3	93700	536	18100	1.25	JRTK129R89DN112M4 JRTKF129R89DN112M4 JRTKA129R89DN112M4 JRTKAF129R89DN112M4
3.7	82200	473	18200	1.40	
4.2	73800	418	18300	1.55	
4.8	64600	367	18400	1.80	
5.3	58000	330	18400	2.0	
6.2	49700	287	18500	2.3	
7.0	44000	253	18500	2.6	
2.9	108000	610	17900	1.05	JRTK129R79DN112M4 JRTKF129R79DN112M4 JRTKA129R79DN112M4 JRTKAF129R79DN112M4
3.2	97300	549	18000	1.20	
3.7	84300	477	18200	1.35	
4.2	74200	418	18300	1.55	
4.9	64500	364	14600	1.10	JRTK109R79DN112M4 JRTKF109R79DN112M4 JRTKA109R79DN112M4 JRTKAF109R79DN112M4
5.6	56400	318	14600	1.25	
6.2	50700	286	14600	1.40	
7.0	44400	251	14600	1.60	
8.0	39100	222	14600	1.80	
9.0	34600	196	14600	2.0	
10	31000	174	14600	2.0	
11	27400	154	14600	2.3	
1.3	24900	140	14600	2.6	

Output speed n_a [r/min]	Output torque T_a lbf in	Ratio i	Permitted overhung load F_{Ra} [1] lbf	Service factor f_B	Model
5.4HP					
8.9	35800	199	8990	1.05	JRTK99R59DN112M4 JRTKF99R59DN112M4 JRTKA99R59DN112M4 JRTKAF99R59DN112M4
8.1	42000	146.07	18500	2.7	JRTK129DN132S6 JRTKF129DN132S6 JRTKA129DN132S6 JRTKAF129DN132S6
8.7	39200	136.14	18500	2.9	
9.6	35200	122.48	18500	3.3	
11	31700	110.18	18600	3.6	
8.2	41300	143.47	14600	1.70	JRTK109DN132S6 JRTKF109DN132S6 JRTKA109DN132S6 JRTKAF109DN132S6
9.7	34900	121.46	14600	2.0	
11	32300	112.41	14600	2.2	
12	29000	100.75	14600	2.4	
13	26200	90.96	14600	2.7	
12	27500	143.47	14600	2.6	JRTK109DN112M4 JRTKF109DN112M4 JRTKA109DN112M4 JRTKAF109DN112M4
15	23300	121.46	14600	3.0	
16	21600	112.41	14600	3.3	
18	19300	100.75	14600	3.6	
19	17400	90.96	14600	4.0	
21	15800	82.61	14600	4.5	
24	14000	73.30	14300	5.0	
12	29400	153.21	8990	1.30	JRTK99DN112M4 JRTKF99DN112M4 JRTKA99DN112M4 JRTKAF99DN112M4
13	26900	140.28	8990	1.40	
14	23800	123.93	8990	1.60	
17	20200	105.13	8990	1.90	
18	18600	96.80	8990	2.0	
20	16600	86.52	8990	2.3	
23	14900	77.89	8990	2.5	
25	13500	70.54	8990	2.8	
15	22200	115.82	6180	1.05	JRTK89DN112M4 JRTKF89DN112M4 JRTKA89DN112M4 JRTKAF89DN112M4
17	19700	102.71	6250	1.20	
20	16600	86.34	6330	1.45	
22	15200	79.34	6360	1.55	
25	13500	70.46	6390	1.75	
28	12100	63.00	6420	1.95	
31	10800	56.64	6400	2.2	
36	9450	49.16	6230	2.5	
40	8460	44.02	6100	2.7	
48	7020	36.52	5860	3.1	
27	12400	64.75	3670	1.10	JRTK79DN112M4 JRTKF79DN112M4 JRTKA79DN112M4 JRTKAF79DN112M4
30	11200	58.34	3840	1.20	
35	9840	51.18	4010	1.40	
39	8680	45.16	4130	1.60	
44	7700	40.04	4220	1.80	
46	7380	38.39	4240	1.80	
50	6760	35.20	4290	2.0	
57	5930	30.89	4340	2.3	
60	5620	29.27	4360	2.4	
69	4920	25.62	4400	2.8	
77	4430	23.08	4420	3.1	
87	3890	20.25	4450	3.4	

Output speed n_a [r/min]	Output torque T_a lbf in	Ratio i	Permitted overhung load F_{Ra} [1] lbf	Service factor f_B	Model
5.4HP					
59	5800	30.22	2600	1.25	
65	5240	27.28	2680	1.40	
74	4610	24.00	2770	1.55	
78	4350	22.66	2800	1.60	
92	3710	19.30	2860	1.80	
101	3370	17.54	2890	1.95	JRTK69DN112M4 JRTKF69DN112M4 JRTKA69DN112M4 JRTKAF69DN112M4
116	2920	15.19	2920	2.1	
134	2540	13.22	2920	2.3	
142	2400	12.48	2920	1.95	
166	2040	10.63	2820	2.2	
183	1850	9.66	2760	2.3	
211	1600	8.37	2680	2.4	
243	1400	7.28	2590	2.6	
340	1000	5.20	2390	3.1	
65	5250	27.34	1380	1.00	
74	4620	24.05	1390	1.15	
78	4360	22.71	1400	1.20	
91	3710	19.34	1390	1.35	
101	3380	17.57	1390	1.45	
116	2920	15.22	1370	1.60	JRTK59DN112M4 JRTKF59DN112M4 JRTKA59DN112M4 JRTKAF59DN112M4
134	2540	13.25	1350	1.75	
148	2290	11.92	1280	1.60	
157	2160	11.26	1270	1.70	
185	1840	9.59	1240	1.95	
203	1670	8.71	1230	2.1	
234	1450	7.55	1200	2.2	
269	1260	6.57	1160	2.4	
377	900	4.69	1080	2.9	
7.5HP					
2.1	199400	835	42700	2.2	JRTK189R109DN132S4 JRTKH189R109DN132S4
2.4	172600	729	42700	2.6	
0.97	442800	1821	42700	1.00	
1.1	391700	1605	42700	1.15	
1.3	336300	1395	42700	1.30	
1.5	290800	1196	42700	1.50	JRTK189R99DN132S4 JRTKH189R99DN132S4
1.7	254200	1046	42700	1.75	
1.9	229000	945	42700	1.95	
2.4	179000	738	42700	2.5	
2.9	150400	621	42700	2.9	
1.6	267700	1101	33700	1.05	
1.9	230400	944	33700	1.25	
2.1	203300	843	33700	1.40	
2.3	183400	757	33700	1.55	JRTK169R99DN132S4 JRTKH169R99DN132S4
2.8	153600	632	33700	1.85	
3.1	134200	561	33700	2.1	
3.7	116800	481	33700	2.4	
4.2	101300	423	33700	2.8	
4.6	89200	385	25900	1.80	JRTK159R109DN132S4 JRTKF159R109DN132S4 JRTKA159R109DN132S4 JRTKAF159R109DN132S4
5.9	70700	299	26000	2.2	
7.0	59300	253	26100	2.7	

Output speed n_a [r/min]	Output torque T_a lbf in	Ratio i	Permitted overhung load F_{Ra} [1] lbf	Service factor f_B	Model
7.5HP					
2.7	158200	661	25200	1.00	
3.1	137700	567	25500	1.15	
3.5	122500	504	25600	1.30	JRTK159R99DN132S4 JRTKF159R99DN132S4 JRTKA159R99DN132S4 JRTKAF159R99DN132S4
4.1	104600	434	25800	1.50	
4.7	90800	379	25900	1.75	
5.3	80200	333	26000	2.0	
6.1	69600	291	26000	2.3	
3.7	115300	473	17800	1.00	
4.2	103400	418	17900	1.10	
4.8	90300	367	18100	1.25	
5.3	81100	330	18200	1.40	JRTK129R89DN132S4 JRTKF129R89DN132S4 JRTKA129R89DN132S4 JRTKAF129R89DN132S4
6.2	69800	287	18300	1.65	
7.0	61700	253	18400	1.85	
8.3	51900	213	18400	2.2	
8.8	49400	200	18500	2.1	
11	40900	166	18500	2.6	
12	36100	147	18500	2.9	
4.2	103500	418	17900	1.10	JRTK129R79DN132S4 JRTKF129R79DN132S4 JRTKA129R79DN132S4 JRTKAF129R79DN132S4
6.2	70800	286	14600	1.00	
7.0	62000	251	14600	1.15	
8.0	54700	222	14600	1.30	JRTK109R79DN132S4 JRTKF109R79DN132S4 JRTKA109R79DN132S4 JRTKAF109R79DN132S4
9.0	48400	196	14600	1.45	
10.0	43300	174	14600	1.45	
11	38300	154	14600	1.65	
13	34800	140	14600	1.85	
8.7	54200	136.14	18400	2.1	JRTK129DN132L6 JRTKF129DN132L6 JRTKA129DN132L6 JRTKAF129DN132L6
9.7	48800	122.48	18500	2.4	
11	43900	110.18	18500	2.6	
13	35800	89.89	18500	3.2	
12	39000	146、07	18500	3、0	JRTK129R79DN132S4 JRTKF129R79DN132S4 JRTKA129R79DN132S4 JRTKAF129R79DN132S4
11	44800	112.41	14600	1.60	JRTK109DN132L6 JRTKF109DN132L6 JRTKA109DN132L6 JRTKAF109DN132L6
12	40100	100.75	14600	1.75	
13	36200	90.96	14600	1.95	
14	32900	82.61	14600	2.1	
12	38300	143.47	14600	1.85	
15	32400	121.46	14600	2.2	JRTK109DN132S4 JRTKF109DN132S4 JRTKA109DN132S4 JRTKAF109DN132S4
16	30000	112.41	14600	2.4	
18	26900	100.75	14600	2.6	
19	24300	90.96	14500	2.9	
21	22000	82.61	14200	3.2	
14	33100	123.93	8990	1.15	
17	28000	105.13	8990	1.35	JRTK99DN132S4 JRTKF99DN132S4 JRTKA99DN132S4 JRTKAF99DN132S4
18	25800	96.80	8990	1.45	
20	23100	86.52	8990	1.65	
23	20800	77.89	8990	1.85	

Output speed n_a [r/min]	Output torque T_a lbf in	Ratio i	Permitted overhung load F_{Ra} [1] lbf	Service factor f_B	Model
7.5HP					
25	18800	70.54	8920	2.0	JRTK99DN132S4 JRTKF99DN132S4 JRTKA99DN132S4 JRTKAF99DN132S4
28	16700	62.55	8730	2.3	
31	15100	56.55	8570	2.5	
37	12800	47.93	8290	3.0	
20	23000	86.34	6160	1.05	JRTK89DN132S4 JRTKF89DN132S4 JRTKA89DN132S4 JRTKAF89DN132S4
22	21200	79.34	6140	1.15	
25	18800	70.46	6100	1.25	
28	16800	63.00	6030	1.40	
31	15100	56.64	5960	1.60	
36	13100	49.16	5860	1.80	
40	11700	44.02	5760	1.95	
48	9760	36.52	5590	2.3	
56	8380	31.39	5430	2.9	
63	7440	27.88	5310	3.1	
35	13600	51.18	3460	1.00	JRTK79DN132S4 JRTKF79DN132S4 JRTKA79DN132S4 JRTKAF79DN132S4
39	12000	45.16	3720	1.15	
44	10700	40.04	3910	1.30	
57	8250	30.89	4170	1.65	
60	7820	29.27	4210	1.75	
69	6840	25.62	4280	2.0	
77	6160	23.08	4330	2.2	
87	5410	20.25	4340	2.5	
99	4770	17.87	4230	2.7	
112	4230	15.84	4120	2.9	
131	3610	13.52	3980	3.3	
143	3300	12.36	3840	2.7	
163	2890	10.84	3730	3.0	
74	6410	24.00	2490	1.10	JRTK69DN132S4 JRTKF69DN132S4 JRTKA69DN132S4 JRTKAF69DN132S4
78	6050	22.66	2560	1.15	
92	5150	19.30	2700	1.30	
101	4680	17.54	2760	1.40	
116	4050	15.19	2830	1.55	
134	3530	13.22	2870	1.70	
142	3330	12.48	2760	1.40	
166	2840	10.63	2960	1.55	
183	2580	9.66	2640	1.65	
211	2230	8.37	2570	1.75	
243	1940	7.28	2500	1.90	
340	1390	5.20	2320	2.2	
91	5160	19.34	1150	1.00	JRTK59DN132S4 JRTKF59DN132S4 JRTKA59DN132S4 JRTKAF59DN132S4
101	4690	17.57	1170	1.05	
116	4060	15.22	1180	1.15	
133	3540	13.25	1180	1.25	
148	3180	11.92	1110	1.15	
157	3000	11.26	1110	1.20	
184	2560	9.59	1110	1.40	
203	2320	8.71	1100	1.50	
234	2010	7.55	1090	1.60	
269	1750	6.57	1070	1.75	
377	1250	4.69	1020	2.1	

Output speed n_a [r/min]	Output torque T_a lbf in	Ratio i	Permitted overhung load F_{Ra} [1] lbf	Service factor f_B	Model
7.5HP					
370	1270	9.59	1020	2.8	JRTK59DN132S2 JRTKF59DN132S2 JRTKA59DN132S2 JRTKAF59DN132S2
407	1160	8.71	1000	3.0	
470	1000	7.55	980	3.2	
540	870	6.57	950	3.5	
756	625	4.69	880	4.2	
10.0HP					
2.1	267900	835	42700	1.65	JRTK189R109DN132M4 JRTKH189R109DN132M4
2.4	232400	729	42700	1.90	
2.9	198200	622	42700	2.2	
3.4	168500	520	42700	2.6	
1.5	389000	1196	42700	1.15	JRTK189R99DN132M4 JRTKH189R99DN132M4
1.7	339900	1046	42700	1.30	
1.9	306600	945	42700	1.45	
2.4	239600	738	42700	1.85	
2.9	201400	621	42700	2.2	
3.4	169900	527	42700	2.6	
5.6	103000	318	33700	2.8	JRTK169R109DN132M4 JRTKH169R109DN132M4
2.1	272500	843	33700	1.05	JRTK169R99DN132M4 JRTKH169R99DN132M4
2.3	245500	757	33700	1.15	
2.8	205500	632	33700	1.40	
3.2	180200	561	33700	1.55	
3.7	156300	481	33700	1.80	
4.2	136000	423	33700	2.1	
4.8	118900	369	33700	2.4	
4.6	120800	385	25600	1.30	JRTK159R109DN132M4 JRTKF159R109DN132M4 JRTKA159R109DN132M4 JRTKAF159R109DN132M4
5.9	95200	299	25900	1.65	
7.0	80100	253	26000	2.0	
8.3	67900	213	26000	2.3	
4.1	140200	434	25400	1.15	JRTK159R99DN132M4 JRTKF159R99DN132M4 JRTKA159R99DN132M4 JRTKAF159R99DN132M4
4.7	121900	379	25600	1.30	
5.3	107500	333	25800	1.50	
6.1	93500	291	25900	1.70	
5.4	108200	330	17900	1.05	JRTK129R89DN132M4 JRTKF129R89DN132M4 JRTKA129R89DN132M4 JRTKAF129R89DN132M4
6.2	93300	287	18100	1.25	
7.0	82500	253	18200	1.40	
8.3	69300	213	18300	1.65	
8.8	66100	200	18300	1.60	
11	54700	166	18400	1.95	
12	48200	147	18500	2.2	
9.0	64500	196	14600	1.10	JRTK109R79DN132M4 JRTKF109R79DN132M4 JRTKA109R79DN132M4 JRTKAF109R79DN132M4
10	57700	174	14600	1.10	
12	51100	154	14600	1.25	
13	46300	140	14600	1.35	
7.2	87600	164.50	33700	3.2	JRTK169DN160M6 JRTKF169DN160M6
8.8	71900	134.99	33700	3.9	
7.9	80100	150.41	26000	2.0	JRTK159DN160M6 JRTKF159DN160M6
9.7	65200	122.39	26000	2.4	
12	53400	100.22	26100	3.0	
13	48800	91.65	26100	3.3	
15	42500	79.75	26100	3.8	

Output speed n_a [r/min]	Output torque T_a lbf in	Ratio i	Permitted overhung load F_{Ra} [1] lbf	Service factor f_B	Model
10.0HP					
8.7	72500	136.14	18300	1.60	JRTK129DN160M6 JRTKF129DN160M6 JRTKA129DN160M6 JRTKAF129DN160M6
9.7	65200	122.48	18300	1.75	
11	58700	110.18	18400	1.95	
13	47900	89.89	18500	2.4	
12	51800	146.07	18400	2.2	JRTK129DN132M4 JRTKF129DN132M4 JRTKA129DN132M4 JRTKAF129DN132M4
13	48300	136.14	18500	2.4	
14	43500	122.48	18500	2.6	
16	39100	110.18	18500	2.9	
20	31900	89.89	18600	3.6	
22	29100	81.98	18600	4.0	
25	25100	70.95	18600	4.6	
12	50900	143.47	14600	1.40	JRTK109DN132M4 JRTKF109DN132M4 JRTKA109DN132M4 JRTKAF109DN132M4
15	43100	121.46	14600	1.65	
16	39900	112.41	14400	1.75	
18	35700	100.75	14200	2.0	
20	32300	90.96	13900	2.2	
21	29300	82.61	13700	2.4	
24	26000	73.30	13400	2.7	
27	23600	66.52	13100	3.0	
31	20300	57.17	12700	3.5	
36	17700	49.90	12300	3.9	
42	15000	42.33	11900	4.3	
48	13100	37.00	11500	4.8	
17	37300	105.31	8620	1.00	JRTK99DN132M4 JRTKF99DN132M4 JRTKA99DN132M4 JRTKAF99DN132M4
18	34300	96.80	8590	1.10	
20	30700	86.52	8530	1.25	
23	27600	77.89	8450	1.40	
25	25000	70.54	8360	1.50	
28	22200	62.55	8240	1.70	
31	20000	56.55	8120	1.90	
37	17000	47.93	7910	2.2	
42	14800	41.87	7730	2.6	
46	13500	38.30	7600	2.8	
52	12100	34.23	7440	3.1	
28	22300	63.00	5460	1.05	JRTK89DN132M4 JRTKF89DN132M4 JRTKA89DN132M4 JRTKAF89DN132M4
31	20100	56.64	5450	1.20	
36	17400	49.16	5410	1.35	
40	15600	44.02	5360	1.45	
49	12900	36.52	5250	1.70	
57	11100	31.39	5150	2.1	
64	9890	27.88	5050	2.3	
71	8840	24.92	4960	2.5	
79	7950	22.41	4870	2.6	
91	6900	19.45	4740	3.0	
102	6180	17.42	4630	3.1	
111	5680	16.00	4450	2.8	
123	5130	14.45	4460	3.6	
57	10900	30.89	3880	1.25	JRTK79DN132M4 JRTKF79DN132M4 JRTKA79DN132M4 JRTKAF79DN132M4
61	10300	29.27	3950	1.30	
69	9090	25.62	4090	1.50	

Output speed n_a [r/min]	Output torque T_a lbf in	Ratio i	Permitted overhung load F_{Ra} [1] lbf	Service factor f_B	Model
10.0HP					
77	8190	23.08	4170	1.65	JRTK79DN132M4 JRTKF79DN132M4 JRTKA79DN132M4 JRTKAF79DN132M4
88	7180	20.25	4120	1.85	
99	6340	17.87	4040	2.0	
112	5620	15.84	3950	2.2	
131	4800	13.52	3840	2.5	
144	4380	12.36	3690	2.0	
164	3840	10.84	3600	2.3	
186	3390	9.56	3510	2.5	
209	3010	8.48	3420	2.6	
245	2570	7.24	3300	2.8	
101	6220	17.54	2530	1.05	JRTK69DN132M4 JRTKF69DN132M4 JRTKA69DN132M4 JRTKAF69DN132M4
117	5390	15.19	2660	1.15	
134	4690	13.22	2690	1.25	
142	4430	12.48	2570	1.05	
167	3770	10.63	2520	1.15	
184	3430	9.66	2490	1.25	
212	2970	8.37	2440	1.30	
244	2580	7.28	2390	1.45	
341	1840	5.20	2240	1.70	
185	3400	9.59	950	1.05	JRTK59DN132M4 JRTKF59DN132M4 JRTKA59DN132M4 JRTKAF59DN132M4
204	3090	8.71	960	1.10	
235	2680	7.55	960	1.20	
270	2330	6.57	960	1.30	
378	1660	4.69	940	1.60	
370	1700	9.59	940	2.1	JRTK59DN132M2 JRTKF59DN132M2 JRTKA59DN132M2 JRTKAF59DN132M2
407	1540	8.71	930	2.2	
470	1340	7.55	910	2.4	
540	1160	6.57	890	2.6	
756	830	4.69	840	3.2	
12.3HP					
2.1	331400	835	42700	1.35	JRTK189R109DN132L4 JRTKH189R109DN132L4
2.4	287900	729	42700	1.55	
2.9	245400	622	42700	1.80	
3.4	208500	520	42700	2.1	
3.9	181000	454	42700	2.4	
1.7	419500	1046	42700	1.05	JRTK189R99DN132L4 JRTKH189R99DN132L4
1.9	378500	945	42700	1.15	
2.4	295800	738	42700	1.50	
2.9	248600	621	42700	1.80	
3.4	210000	527	42700	2.1	
5.6	127500	318	33700	2.2	JRTK169R109DN132L4 JRTKH169R109DN132L4
6.4	110700	278	33700	2.6	
7.3	95600	244	33700	3.0	
8.3	83100	213	33700	3.4	
8.6	81000	206	33700	3.5	
2.8	253600	632	33700	1.10	JRTK169R99DN132L4 JRTKH169R99DN132L4
3.2	222800	561	33700	1.25	
3.7	192800	481	33700	1.45	
4.2	168200	423	33700	1.70	
4.8	147000	369	33700	1.95	



Output speed n_a [r/min]	Output torque T_a lbf in	Ratio i	Permitted overhung load F_{Ra} [1] lbf	Service factor f_B	Model
12.3HP					
4.6	150100	385	25300	1.05	
5.5	125600	325	25600	1.25	
5.9	117900	299	25700	1.35	
7.0	99300	253	25800	1.60	JRTK159R109DN132L4 JRTKF159R109DN132L4 JRTKA159R109DN132L4 JRTKAF159R109DN132L4
7.7	88900	230	25900	1.80	
8.3	84300	213	25900	1.90	
9.5	72200	187	26000	2.2	
11	61300	157	26100	2.6	
4.7	150700	379	25300	1.05	JRTK159R99DN132L4
5.3	132800	333	25500	1.20	JRTKF159R99DN132L4 JRTKA159R99DN132L4
6.1	115600	291	25700	1.40	JRTKAF159R99DN132L4
7.0	101800	253	18000	1.15	
8.3	85500	213	18200	1.35	JRTK129R89DN132L4
8.9	81400	200	18200	1.30	JRTKF129R89DN132L4 JRTKA129R89DN132L4
11	67400	166	18300	1.55	JRTKAF129R89DN132L4
12	59500	147	18400	1.80	
12	62900	154	14400	1.00	JRTK109R79DN132L4 JRTKF109R79DN132L4 JRTKA109R79DN132L4 JRTKAF109R79DN132L4
13	57100	140	14300	1.10	
12	65600	150.41	26000	2.4	JRTK159DN132L4 JRTKF159DN132L4 JRTKA159DN132L4 JRTKAF159DN132L4
14	53400	122.39	26100	3.0	
13	59400	136.14	18400	1.95	
14	53400	122.48	18400	2.1	JRTK129DN132L4 JRTKF129DN132L4 JRTKA129DN132L4 JRTKAF129DN132L4
16	48100	110.18	18500	2.4	
20	39200	89.89	18500	2.9	
22	35700	81.98	18500	3.2	
16	49000	112.41	13800	1.45	
18	43900	100.75	13600	1.60	
20	39700	90.96	13400	1.80	
21	36000	82.61	13200	1.95	JRTK109DN132L4 JRTKF109DN132L4 JRTKA109DN132L4 JRTKAF109DN132L4
24	32000	73.30	12900	2.2	
27	29000	66.52	12700	2.4	
31	24900	57.17	12400	2.8	
36	21700	49.90	12000	3.2	
42	18400	42.33	11600	3.5	
21	37700	86.52	7910	1.00	
23	34000	77.89	7890	1.10	
25	30700	70.54	7850	1.25	
28	27300	62.55	7790	1.40	
31	24600	56.55	7710	1.55	JRTK99DN132L4 JRTKF99DN132L4 JRTKA99DN132L4 JRTKAF99DN132L4
37	20900	47.93	7570	1.80	
42	18200	41.87	7430	2.1	
46	16700	38.30	7320	2.3	
52	14900	34.23	7190	2.5	
58	13400	30.82	7060	2.8	
64	12100	27.91	6930	3.1	
72	10800	24.75	6770	3.5	

Output speed n_a [r/min]	Output torque T_a lbf in	Ratio i	Permitted overhung load F_{Ra} [1] lbf	Service factor f_B	Model
12.3HP					
36	21400	49.16	5000	1.10	
40	19200	44.02	4990	1.20	
49	15900	36.52	4950	1.40	
57	13700	31.39	4880	1.75	
64	12100	27.88	4820	1.90	
71	10800	24.92	4750	2.0	JRTK89DN132L4 JRTKF89DN132L4 JRTKA89DN132L4 JRTKAF89DN132L4
79	9780	22.41	4680	2.1	
91	8480	19.45	4580	2.4	
102	7600	17.42	4490	2.6	
111	6980	16.00	4300	2.3	
123	6300	14.45	4330	3.0	
141	5480	12.56	4210	3.2	
159	4870	11.17	4020	2.7	
178	4360	10.00	3930	3.0	
77	10000	23.08	3980	1.35	
88	8830	20.25	3920	1.50	
99	7790	17.87	3860	1.65	
112	6910	15.84	3800	1.80	JRTK79DN132L4 JRTKF79DN132L4 JRTKA79DN132L4 JRTKAF79DN132L4
131	5900	13.52	3700	2.0	
144	5390	12.36	3550	1.65	
164	4730	10.84	3480	1.85	
186	4170	9.56	3400	2.0	
209	3700	8.48	3330	2.1	
245	3160	7.24	3220	2.3	
15.0HP					
2.1	406000	835	42700	1.10	
2.4	352900	729	42700	1.25	
2.9	300900	622	42700	1.45	JRTK189R109DN160M4 JRTKH189R109DN160M4
3.4	255300	520	42700	1.75	
3.9	221900	454	42700	2.0	
5.0	171200	355	42700	2.6	
2.4	361700	738	42700	1.20	JRTK189R99DN160M4 JRTKH189R99DN160M4
2.9	304000	621	42700	1.45	
3.4	256900	527	42700	1.70	
5.6	156100	318	33700	1.80	
6.4	135700	278	33700	2.1	JRTK169R109DN160M4 JRTKH169R109DN160M4
7.3	117400	244	33700	2.4	
8.3	102100	213	33700	2.8	
8.6	99500	206	33700	2.8	
3.2	272800	561	33700	1.05	
3.7	235700	481	33700	1.20	JRTK169R99DN160M4 JRTKH169R99DN160M4
4.2	205900	423	33700	1.35	
4.8	179800	369	33700	1.55	
5.5	154700	325	25300	1.05	
6.0	144500	299	25400	1.10	
7.0	121900	253	25600	1.30	JRTK159R109DN160M4 JRTKF159R109DN160M4 JRTKA159R109DN160M4 JRTKAF159R109DN160M4
7.7	109400	230	25700	1.45	
8.3	103500	213	25800	1.55	
9.5	88900	187	25900	1.80	
11	75400	157	26000	2.1	
15	59500	122	26100	2.7	

Output speed n_a [r/min]	Output torque T_a lbf in	Ratio i	Permitted overhung load F_{Ra} [1] lbf	Service factor f_B	Model
15.0HP					
5.3	162500	333	25200	1.00	JRTK159R99DN160M4 JRTKF159R99DN160M4 JRTKA159R99DN160M4 JRTKAF159R99DN160M4
6.1	141500	291	25400	1.10	
8.3	104500	213	17900	1.10	JRTK129R89DN160M4 JRTKF129R89DN160M4 JRTKA129R89DN160M4 JRTKAF129R89DN160M4
8.9	99500	200	18000	1.05	
11	82400	166	18200	1.30	
12	72700	147	18300	1.45	
11	87500	164.50	33700	3.2	JRTK169DN160M4 JRTKF169DN160M4 JRTKA169DN160M4 JRTKAF169DN160M4
13	71800	134.99	33700	3.9	
12	80000	150.41	26000	2.0	JRTK159DN160M4 JRTKF159DN160M4 JRTKA159DN160M4 JRTKAF159DN160M4
15	65100	122.39	26000	2.5	
18	53300	100.22	25800	3.0	
19	48700	91.56	25300	3.3	
13	72400	136.14	18300	1.60	JRTK129DN160M4 JRTKF129DN160M4 JRTKA129DN160M4 JRTKAF129DN160M4
14	65100	122.48	18400	1.75	
16	58600	110.18	18400	1.95	
20	47800	89.89	18500	2.4	
22	43600	81.98	18500	2.6	
25	37700	70.95	18500	3.0	
16	59800	112.41	13000	1.20	JRTK109DN160M4 JRTKF109DN160M4 JRTKA109DN160M4 JRTKAF109DN160M4
18	53600	100.75	12900	1.30	
20	48400	90.96	12700	1.45	
22	43900	82.61	12600	1.60	
24	39000	73.30	12400	1.80	
27	35300	66.52	12200	2.0	
31	30400	57.17	11900	2.3	
36	36500	49.90	11700	2.6	
42	22500	42.33	11300	2.9	
48	19600	37.00	11000	3.2	
25	37500	70.54	7260	1.00	JRTK99DN160M4 JRTKF99DN160M4 JRTKA99DN160M4 JRTKAF99DN160M4
28	33200	62.55	7260	1.15	
31	30000	56.55	7240	1.25	
37	25500	47.93	7160	1.50	
42	22200	41.87	7070	1.70	
46	20300	38.30	7000	1.85	
52	18200	34.23	6900	2.1	
58	16300	30.82	6800	2.3	
64	14800	27.91	6690	2.6	
72	13100	24.75	6560	2.9	
79	11900	22.37	6440	3.2	
40	23400	44.02	4560	1.00	JRTK89DN160M4 JRTKF89DN160M4 JRTKA89DN160M4 JRTKAF89DN160M4
49	19400	36.52	4590	1.15	
57	16700	31.39	4580	1.45	
64	14800	27.88	4550	1.55	
71	13200	24.92	4510	1.65	
79	11900	22.41	4460	1.70	
91	10300	19.45	4390	1.95	
102	9260	17.42	4320	2.1	

Output speed n_a [r/min]	Output torque T_a lbf in	Ratio i	Permitted overhung load F_{Ra} [1] lbf	Service factor f_B	Model
15.0HP					
111	8510	16.00	4110	1.85	JRTK89DN160M4 JRTKF89DN160M4 JRTKA89DN160M4 JRTKAF89DN160M4
123	7680	14.45	4190	2.4	
141	6680	12.56	4090	2.6	
159	5940	11.17	3890	2.2	
178	5310	10.00	3820	2.5	
214	4410	8.29	3680	2.8	
246	3830	7.21	3580	3.0	
77	12200	23.08	3690	1.10	JRTK79DN160M4 JRTKF79DN160M4 JRTKA79DN160M4 JRTKAF79DN160M4
88	10700	20.25	3690	1.25	
99	9500	17.87	3660	1.35	
112	8420	15.84	3620	1.45	
131	7190	13.52	3550	1.65	
144	6570	12.36	3390	1.35	
164	5760	10.84	3340	1.50	
186	5080	9.56	3280	1.65	
209	4510	8.48	3220	1.75	
245	3850	7.24	3130	1.90	
20HP					
2.9	403600	622	42700	1.10	JRTK189R109DN160L4 JRTKH189R109DN160L4
3.4	342100	520	42700	1.30	
3.9	297700	454	42700	1.50	
5.0	229900	355	42700	1.90	
6.8	171200	261	42700	2.6	
2.9	406600	621	42700	1.10	JRTK189R99DN160L4 JRTKH189R99DN160L4
3.4	343900	527	42700	1.30	
5.6	209200	318	33700	1.35	JRTK169R109DN160L4 JRTKH169R109DN160L4
6.4	182000	278	33700	1.55	
7.3	157700	244	33700	1.80	
8.3	137300	213	33700	2.1	
8.6	133900	206	33700	2.1	
9.9	115400	180	33700	2.5	
11	104700	160	33700	2.7	
4.2	275800	423	33700	1.05	JRTK169R99DN160L4 JRTKH169R99DN160L4
4.8	240700	369	33700	1.20	
7.7	147500	230	25400	1.10	JRTK159R109DN160L4 JRTKF159R109DN160L4 JRTKA159R109DN160L4 JRTKAF159R109DN160L4
8.3	13900	213	25500	1.15	
9.5	119800	187	25600	1.35	
11	101700	157	25800	1.55	
15	79900	122	26000	2.0	
17	69600	107	25500	2.3	
12	97200	147	18000	1.10	JRTK129R89DN160L4 JRTKF129R89DN160L4 JRTKA129R89DN160L4 JRTKAF129R89DN160L4
11	116600	164.50	33700	2.4	JRTK169DN160L4 JRTKH169DN160L4
13	95700	134.99	33700	3.0	
12	106600	150.41	25800	1.50	JRTK159DN160L4 JRTKF159DN160L4 JRTKA159DN160L4 JRTKAF159DN160L4
15	86700	122.39	25700	1.85	
18	71000	100.22	24800	2.2	
19	64900	91.65	24400	2.5	
22	56500	79.75	23700	2.8	



Output speed n_a [r/min]	Output torque T_a lbf in	Ratio i	Permitted overhung load F_{Ra} [1] lbf	Service factor f_B	Model
20HP					
13	96500	136.14	18000	1.20	
15	86800	122.48	18100	1.30	
16	78100	110.18	18200	1.45	
20	63700	89.89	18400	1.80	JRTK129DN160L4 JRTKF129DN160L4 JRTKA129DN160L4 JRTKAF129DN160L4
22	58100	81.98	18200	2.0	
25	50300	70.95	17800	2.3	
28	44300	62.60	17400	2.6	
33	38300	54.07	16900	3.0	
37	33900	47.82	16500	3.4	
20	64400	90.96	11300	1.10	
22	58500	82.61	11500	1.20	
24	51900	73.30	11400	1.35	
27	47100	66.52	11400	1.50	
31	40500	57.17	11200	1.75	JRTK109DN160L4 JRTKF109DN160L4 JRTKA109DN160L4 JRTKAF109DN160L4
36	35300	49.90	11000	1.95	
42	30000	42.33	10700	2.2	
48	26200	37.00	10500	2.4	
54	23100	32.69	10300	2.8	
57	22100	31.28	10200	2.7	
61	20500	29.00	10100	3.1	
37	33900	47.93	6410	1.10	
42	29600	41.87	6420	1.30	
46	27100	38.30	6400	1.40	
52	24200	34.23	6360	1.55	
58	21800	30.82	6310	1.75	JRTK99DN160L4 JRTKF99DN160L4 JRTKA99DN160L4 JRTKAF99DN160L4
64	19700	27.91	6250	1.90	
72	17500	24.75	6170	2.2	
79	15800	22.37	6090	2.4	
94	13400	18.96	5940	2.8	
107	11700	16.56	5800	3.2	
57	22200	31.39	4010	1.05	
64	19700	27.88	4040	1.15	
71	17600	24.92	4060	1.25	
79	15800	22.41	4060	1.30	
91	13700	19.45	4030	1.50	JRTK89DN160L4 JRTKF89DN160L4 JRTKA89DN160L4 JRTKAF89DN160L4
102	12300	17.42	4000	1.60	
111	11300	16.00	3770	1.40	
123	10200	14.45	3930	1.80	
141	8900	12.56	3860	2.0	
159	7910	11.17	3660	1.70	
178	7080	10.00	3610	1.85	
214	5880	8.29	3510	2.1	
246	5110	7.21	3430	2.2	
25HP					
3.4	428100	520	42700	1.05	
3.9	372800	454	42700	1.20	
5.0	288100	355	42700	1.55	JRTK189R109DN180M4 JRTKH189R109DN180M4
6.8	214300	261	42700	2.1	
8.0	181200	221	42700	2.4	
9.2	157900	193	42700	2.8	

Output speed n_a [r/min]	Output torque T_a lbf in	Ratio i	Permitted overhung load F_{Ra} [1] lbf	Service factor f_B	Model
25HP					
3.4	430000	527	42700	1.05	JRTK189R109DN180M4 JRTKH189R109DN180M4
5.6	261800	318	33700	1.10	
6.4	227900	278	33700	1.25	
7.3	197600	244	33700	1.45	
8.3	172200	213	33700	1.65	
8.7	167900	206	33700	1.70	JRTK169R109DN180M4 JRTKH169R109DN180M4
9.9	144900	180	33700	1.95	
11	131100	160	33700	2.2	
13	110800	135	33700	2.5	
15	96500	118	33700	2.9	
9.5	150500	187	25300	1.05	
11	127700	157	25600	1.25	JRTK159R109DN180M4 JRTKF159R109DN180M4
15	100100	122	24900	1.60	JRTKA159R109DN180M4 JRTKAF159R109DN180M4
17	87300	107	24400	1.80	
9.9	159000	179.86	42700	2.8	
11	146100	165.21	42700	3.0	JRTK189DN180M4 JRTKH189DN180M4
12	127800	144.59	42700	3.5	
14	114600	129.69	42700	3.9	
13	119300	134.99	33700	2.4	
16	97100	109.83	33700	2.9	JRTK169DN180M4 JRTKH169DN180M4
20	77700	87.86	33700	3.6	
15	108200	122.39	24500	1.45	
18	88600	100.22	23800	1.80	
19	81000	91.65	23500	1.95	
22	70500	79.75	22900	2.3	JRTK159DN180M4 JRTKF159DN180M4
25	62200	70.38	22400	2.6	JRTKA159DN180M4
29	53900	61.02	21800	3.0	JRTKAF159DN180M4
33	48000	54.29	21200	3.3	
38	41300	46.79	20600	3.9	
47	33600	38.02	19600	4.7	
16	97400	110.18	17700	1.20	
20	79500	89.89	17400	1.45	
22	72500	81.98	17300	1.60	
25	62700	70.95	17000	1.85	
28	55300	62.60	16700	2.1	JRTK129DN180M4
33	47800	54.07	16300	2.4	JRTKF129DN180M4
37	42200	47.82	15900	2.7	JRTKA129DN180M4 JRTKAF129DN180M4
44	35500	40.19	15400	3.2	
49	32000	36.25	15100	3.6	
57	27700	31.37	14600	4.2	
64	24400	27.68	14200	4.7	
24	64800	73.30	10100	1.10	
27	58800	66.52	10300	1.20	
31	50500	57.17	10400	1.40	
36	44100	49.90	10300	1.55	JRTK109DN180M4 JRTKF109DN180M4
42	37400	42.33	10200	1.75	JRTKA109DN180M4 JRTKAF109DN180M4
48	32700	37.00	10000	1.95	
54	28800	32.69	9850	2.2	
57	27600	31.28	9790	2.2	

Output speed n_a [r/min]	Output torque T_a lbf in	Ratio i	Permitted overhung load F_{Ra} [1] lbf	Service factor f_B	Model
25HP					
61	25600	29.00	9670	2.5	
68	23200	26.32	9520	2.7	JRTK109DN180M4
79	19900	22.62	9260	3.2	JRTKF109DN180M4
90	17400	19.74	9020	3.6	JRTKA109DN180M4
106	14800	16.75	8720	4.2	JRTKAF109DN180M4
43	37000	41.87	5760	1.05	
58	27200	30.82	5830	1.40	
64	24600	27.91	5820	1.55	
72	21800	24.75	5780	1.75	JRTK99DN180M4
80	19700	22.37	5740	1.90	JRTKF99DN180M4
94	16700	18.96	5640	2.3	JRTKA99DN180M4
108	14600	16.56	5540	2.6	JRTKAF99DN180M4
129	12200	13.85	5400	3.1	
149	10600	11.99	5270	3.2	
171	9200	10.41	4960	2.8	
71	22000	24.92	3610	1.00	
80	19800	22.41	3650	1.05	
92	17100	19.45	3680	1.20	
102	15300	17.42	3690	1.25	JRTK89DN180M4
123	12700	14.45	3670	1.45	JRTKF89DN180M4
142	11100	12.56	3630	1.60	JRTKA89DN180M4
160	9870	11.17	3420	1.35	JRTKAF89DN180M4
178	8830	10.00	3390	1.50	
215	7330	8.29	3330	1.70	
247	6370	7.21	3270	1.80	
30HP					
3.9	448500	454	42700	1.00	
5.0	346900	355	42700	1.30	
6.8	257900	261	42700	1.70	JRTK189R109DN180L4
8.0	218100	221	42700	2.0	JRTKH189R109DN180L4
9.2	190200	193	42700	2.3	
11	160100	163	42700	2.8	
6.4	274300	278	33700	1.05	
7.3	237900	244	33700	1.20	
8.3	207400	213	33700	1.35	
8.7	202300	206	33700	1.40	JRTK169R109DN180L4
9.9	174700	180	33700	1.60	JRTKH169R109DN180L4
11	157700	160	33700	1.80	
13	133400	135	33700	2.1	
15	116300	118	33700	2.4	
11	153900	157	24300	1.05	JRTK159R109DN180L4
15	120600	122	23800	1.30	JRTKF159R109DN180L4
17	105100	107	23500	1.50	JRTKA159R109DN180L4 JRTKAF159R109DN180L4
9.9	190800	179.86	42700	2.3	
11	175300	165.21	42700	2.5	JRTK189DN180L4
12	153400	144.59	42700	2.9	JRTKH189DN180L4
14	137600	129.69	42700	3.2	
13	143200	134.99	33700	2.0	
16	116500	109.83	33700	2.4	JRTK169DN180L4
20	93200	87.86	33700	3.0	JRTKH169DN180L4
23	82900	78.14	33700	3.4	

Output speed n_a [r/min]	Output torque T_a lbf in	Ratio i	Permitted overhung load F_{Ra} [1] lbf	Service factor f_B	Model
30HP					
15	129800	122.39	23300	1.25	
18	106300	100.22	22800	1.50	
19	97200	91.65	22600	1.65	
22	84600	79.75	22100	1.90	JRTK159DN180L4
25	74600	70.38	21700	2.1	JRTKF159DN180L4
29	64700	61.02	21200	2.5	JRTKA159DN180L4
33	57600	54.29	20700	2.8	JRTKAF159DN180L4
38	49600	46.79	20100	3.2	
47	40300	38.02	19200	4.0	
16	116900	110.18	16500	1.00	
20	95400	89.89	16400	1.20	
22	87000	81.98	16400	1.30	
25	75200	70.95	16200	1.55	
28	66400	62.60	16000	1.75	
33	57300	54.07	15700	2.0	JRTK129DN180L4
37	50700	47.82	15400	2.3	JRTKF129DN180L4
44	42600	40.19	15000	2.7	JRTKA129DN180L4
49	38400	36.25	14700	3.0	JRTKAF129DN180L4
57	33200	31.37	14300	3.5	
64	29300	27.68	13900	3.9	
75	25300	23.91	13500	4.5	
84	22400	21.15	13200	5.1	
27	70500	66.52	8930	1.00	
31	60600	57.17	9340	1.15	
36	52900	49.90	9570	1.30	
42	44900	42.33	9630	1.45	
48	39200	37.00	9540	1.60	
54	34600	32.69	9420	1.85	
57	33100	31.28	9380	1.80	JRTK109DN180L4
61	30700	29.00	9290	2.1	JRTKF109DN180L4
68	27900	26.32	9170	2.3	JRTKA109DN180L4
79	23900	22.62	8960	2.6	JRTKAF109DN180L4
90	20900	19.74	8760	3.0	
106	17700	16.75	8500	3.5	
122	15500	14.64	8280	3.9	
133	14200	13.43	7950	2.7	
152	12400	11.73	7740	3.1	
179	10500	9.94	7480	3.5	
58	32600	30.82	5350	1.15	
64	29600	27.91	5380	1.30	
72	26200	24.75	5400	1.45	
80	23700	22.37	5390	1.60	
94	20100	18.96	5340	1.90	JRTK9DN180L4
108	17500	16.56	5290	2.2	JRTKF99DN180L4
129	14600	13.85	5180	2.6	JRTKA909DN180L4
149	12700	11.99	5080	2.7	JRTKAF99DN180L4
171	11000	10.41	4770	2.3	
205	9230	8.71	4650	2.5	
236	7990	7.54	4540	2.6	





Output speed n_a [r/min]	Output torque T_a lbf in	Ratio i	Permitted overhung load F_{Ra} [1] lbf	Service factor f_B	Model
30HP					
92	20600	19.45	3330	1.00	
102	18400	17.42	3370	1.05	
123	15300	14.45	3410	1.20	JRTK89DN180L4 JRTKF89DN180L4 JRTKA89DN180L4 JRTKAF89DN180L4
142	13300	12.56	3410	1.35	
160	11800	11.17	3180	1.10	
178	10600	10.00	3180	1.25	
215	8800	8.29	3160	1.40	
247	7650	7.21	3120	1.50	
40HP					
6.8	344600	261	42700	1.30	
8.1	291700	221	42700	1.50	JRTK189R109DN200L4 JRTKH189R109DN200L4
9.2	254500	193	42700	1.75	
11	214500	163	42700	2.1	
8.4	277500	213	33700	1.00	
8.7	270600	206	33700	1.05	
9.9	234000	180	33700	1.20	JRTK169R109DN200L4 JRTKH169R109DN200L4
11	210700	160	33700	1.35	
13	178400	135	33700	1.60	
15	155600	118	33700	1.80	
17	140600	107	21500	1.15	JRTK159R109DN200L4 JRTKF159R109DN200L4 JRTKA159R109DN200L4 JRTKAF159R109DN200L4
9.9	254200	179.86	42700	1.75	
11	233500	165.21	42700	1.90	
12	204300	144.59	42700	2.2	JRTK189DN200L4 JRTKH189DN200L4
14	183300	129.69	42700	2.4	
16	159100	112.60	42700	2.8	
17	144400	102.16	42700	3.1	
20	124300	88.00	42700	3.6	
16	155200	109.83	33700	1.80	
20	124100	87.86	33700	2.3	JRTK169DN200L4 JRTKH169DN200L4
23	110400	78.14	33700	2.6	
26	96200	68.07	33700	2.9	
29	85800	60.74	33700	3.3	
18	141600	100.22	20800	1.10	
19	129500	91.65	20800	1.25	
22	112700	79.75	20600	1.40	
25	99400	70.38	20300	1.60	JRTK159DN200L4 JRTKF159DN200L4 JRTKA159DN200L4 JRTKAF159DN200L4
29	86200	61.02	20000	1.85	
33	76700	54.29	19600	2.1	
38	66100	46.79	19200	2.4	
47	53700	38.02	18500	3.0	
57	44200	31.30	17800	3.6	
25	100200	70.95	14600	1.15	
28	88400	62.60	14600	1.30	
33	76400	54.07	14500	1.50	
37	67500	47.82	14300	1.70	JRTK129DN200L4 JRTKF129DN200L4 JRTKA129DN200L4 JRTKAF129DN200L4
44	56800	40.19	14100	2.0	
49	51200	36.25	13900	2.2	
57	44300	31.37	13600	2.6	
64	39100	27.68	13300	2.9	
75	33700	23.91	13000	3.4	

Output speed n_a [r/min]	Output torque T_a lbf in	Ratio i	Permitted overhung load F_{Ra} [1] lbf	Service factor f_B	Model
40HP					
42	59800	42.33	8010	1.10	
48	52200	37.00	8300	1.20	
57	44200	31.28	8510	1.35	
62	40900	29.00	8530	1.55	
68	37100	26.32	8480	1.70	
79	31900	22.62	8370	2.0	JRTK109DN200L4 JRTKF109DN200L4 JRTKA109DN200L4 JRTKAF109DN200L4
90	27900	19.74	8240	2.3	
106	23600	16.75	8060	2.6	
122	20600	14.64	7890	3.0	
133	18900	13.43	7540	2.0	
152	16500	11.73	7380	2.3	
179	14000	9.94	7180	2.6	
205	12200	8.69	7000	2.9	
72	34900	24.75	4620	1.10	
80	31600	22.37	4690	1.20	
94	26700	18.96	4750	1.40	
108	23400	16.56	4770	1.65	JRTK99DN200L4 JRTKF99DN200L4 JRTKA99DN200L4 JRTKAF99DN200L4
129	19500	13.85	4750	1.95	
149	16900	11.99	4710	2.0	
171	14700	10.41	4370	1.75	
205	12300	8.71	4320	1.90	
237	10600	7.54	4260	2.0	
50HP					
6.8	431100	261	42700	1.05	
8.1	365100	221	42700	1.20	JRTK189R109DN225S4 JRTKH189R109DN225S4
9.2	318600	193	42700	1.40	
11	268700	163	42700	1.65	
11	263600	160	33700	1.05	
13	223200	135	33700	1.25	JRTK169R109DN225S4 JRTKH169R109DN225S4
15	194800	118	33700	1.45	
9.9	317400	179.86	42700	1.40	
11	291500	165.21	42700	1.50	
12	255100	144.59	42700	1.75	JRTK189DN225S4 JRTKH189DN225S4
14	228800	129.69	42700	1.95	
16	198700	112.60	42700	2.2	
17	180300	102.16	42500	2.5	
20	155300	88.00	41300	2.9	
16	193800	109.83	33700	1.45	
20	155000	87.86	33700	1.85	
23	137900	78.14	33700	2.0	JRTK169DN225S4 JRTKH169DN225S4
26	120100	68.07	33700	2.4	
29	107100	60.74	33500	2.6	
34	91300	51.77	32400	3.1	
19	161700	91.65	19000	1.00	
22	140700	79.75	19000	1.5	
25	124200	70.38	18900	1.30	JRTK159DN225S4 JRTKF159DN225S4 JRTKA159DN225S4 JRTKAF159DN225S4
29	107600	61.02	18800	1.50	
33	95800	54.29	18600	1.65	
38	82500	46.79	18300	1.95	
47	67100	38.02	17700	2.4	
57	55200	31.30	17200	2.9	

Output speed n_a [r/min]	Output torque T_a lbf in	Ratio i	Permitted overhung load F_{Ra} [1] lbf	Service factor f_B	Model
50HP					
29	110400	62.60	13100	1.05	
33	95400	54.07	13200	1.20	
37	84300	47.82	13200	1.35	
44	70900	40.19	13200	1.60	
49	63900	36.25	13100	1.80	
57	55300	31.37	12900	2.1	JRTK129DN225S4 JRTKF129DN225S4 JRTKA129DN225S4 JRTKAF129DN225S4
64	48800	27.68	12700	2.4	
75	42100	23.91	12400	2.7	
84	37300	21.15	12200	3.1	
100	31300	17.77	11800	3.7	
124	25300	14.35	11400	4.2	
140	22500	12.79	10900	3.4	
166	18900	10.74	10500	3.7	
206	15300	8.68	10000	4.2	
48	65200	37.00	6710	1.00	
57	55200	31.28	7240	1.10	
62	51100	29.00	7420	1.25	
68	46400	26.32	7580	1.35	
79	39900	22.62	7740	1.60	JRTK109DN225S4 JRTKF109DN225S4 JRTKA109DN225S4 JRTKAF109DN225S4
90	34800	19.74	7720	1.85	
107	29500	16.75	7620	2.1	
122	25800	14.64	7500	2.4	
133	23700	13.43	7130	1.60	
152	20600	11.73	7020	1.85	
180	17500	9.94	6870	2.1	
205	15300	8.69	6730	2.4	
243	12900	7.35	6540	2.5	
94	33400	18.96	4160	1.15	
108	29200	16.56	4250	1.30	
129	24400	13.85	4320	1.55	JRTK99DN225S4 JRTKF99DN225S4 JRTKA99DN225S4 JRTKAF99DN225S4
149	21100	11.99	4330	1.65	
171	18300	10.41	3980	1.40	
205	15300	8.71	3990	1.55	
237	13300	7.54	3970	1.60	
60HP					
8.1	438800	221	42700	1.00	
9.2	383000	193	42700	1.15	JRTK189R109DN225M4 JRTKH189R109DN225M4
11	323200	163	42700	1.35	
13	268300	135	33700	1.05	JRTK169R109DN225M4
15	234200	118	33700	1.20	JRTKH169R109DN225M4
9.9	380900	179.86	42700	1.15	
11	349800	165.21	42700	1.25	
12	306200	144.59	42700	1.45	
14	274600	129.69	42500	1.60	JRTK189DN225M4 JRTKH189DN225M4
16	238400	112.60	41700	1.85	
17	216300	102.16	41100	2.0	
20	186300	88.00	40100	2.4	
24	156600	73.96	38900	2.8	
16	232500	109.83	33700	1.20	
20	186000	87.86	33700	1.50	JRTK169DN225M4 JRTKH169DN225M4
23	165400	78.14	33700	1.70	

Output speed n_a [r/min]	Output torque T_a lbf in	Ratio i	Permitted overhung load F_{Ra} [1] lbf	Service factor f_B	Model
60HP					
26	144100	68.07	33100	1.95	
29	128600	60.74	32500	2.2	JRTK169DN225M4
34	109600	51.77	31600	2.6	JRTKH169DN225M4
42	90800	42.89	30500	3.1	
25	149000	70.38	17500	1.05	
29	129200	61.02	17600	1.25	
33	114900	54.29	17500	1.40	
38	99100	46.79	17300	1.60	JRTK159DN225M4
47	80500	38.02	17000	2.0	JRTKF159DN225M4
57	66200	31.30	16600	2.4	JRTKA159DN225M4 JRTKAF159DN225M4
65	58500	27.62	16300	2.7	
75	50700	23.95	15900	3.1	
84	45100	21.31	15500	3.5	
97	38800	18.37	15100	4.1	
33	114500	54.07	12000	1.00	
37	101200	47.82	12200	1.15	
44	85100	40.19	12200	1.35	
49	76700	36.25	12200	1.50	
57	66400	31.37	12200	1.75	JRTK129DN225M4
64	58600	27.68	12100	1.95	JRTKF129DN225M4
75	50600	23.91	11900	2.3	JRTKA129DN225M4
84	44700	21.15	11700	2.6	JRTKAF129DN225M4
100	37600	17.77	11400	3.1	
124	30300	14.35	11000	3.5	
140	27000	12.79	10500	2.8	
166	22700	10.74	10200	3.1	
206	18300	8.68	9810	3.5	
62	61400	29.00	6140	1.05	
68	55700	26.32	6470	1.15	
79	47800	22.62	6840	1.35	
90	41800	19.74	7050	1.50	
107	35400	16.75	7180	1.75	JRTK109DN225M4
122	30900	14.64	7120	1.95	JRTKF109DN225M4
133	28400	13.43	6710	1.35	JRTKA109DN225M4
152	24800	11.73	6660	1.55	JRTKAF109DN225M4
180	21000	9.94	6560	1.75	
205	18400	8.69	6460	1.95	
243	15500	7.35	6310	2.0	
75HP					
12	382700	144.59	40000	1.15	
14	343300	129.69	39800	1.30	
16	298000	112.60	39400	1.50	JRTK189DN250M4
17	270400	102.16	39000	1.65	JRTKH189DN250M4
20	232900	88.00	38300	1.90	
24	195700	73.96	37300	2.3	
28	169500	64.04	36500	2.6	
20	232500	87.86	32200	1.20	
23	206800	78.14	31900	1.35	
26	180200	68.07	31400	1.55	JRTK169DN250M4
29	160700	60.74	31000	1.75	JRTKH169DN250M4
34	137000	51.77	30300	2.1	
42	113500	42.89	29400	2.5	
49	96900	36.61	28600	2.9	





Output speed n_a [r/min]	Output torque T_a lbf in	Ratio i	Permitted overhung load F_{Ra} [1] lbf	Service factor f_B	Model
75HP					
29	161500	61.02	15800	1.00	JRTK159DN250M4 JRTKF159DN250M4 JRTKA159DN250M4 JRTKAF159DN250M4
33	143700	54.29	15900	1.10	
38	123800	46.79	16000	1.30	
47	100600	38.02	15900	1.60	
57	82800	31.30	15600	1.90	
65	73100	27.62	15400	2.2	
75	63400	23.95	15200	2.5	
84	56400	21.31	14900	2.8	
97	48600	18.37	14600	3.3	
120	39500	14.92	14000	4.0	
141	33500	12.65	13600	4.5	
44	106300	40.19	10900	1.10	JRTK129DN250M4 JRTKF129DN250M4 JRTKA129DN250M4 JRTKAF129DN250M4
57	83000	31.37	11100	1.40	
64	73200	27.68	11100	1.55	
75	63200	23.91	11100	1.80	
84	55900	21.15	11000	2.1	
100	47000	17.77	10800	2.5	
124	37900	14.35	10600	2.8	
140	33800	12.79	10000	2.2	
166	28400	10.74	9810	2.5	
206	22900	8.68	9470	2.8	
100HP					
16	397400	112.60	35500	1.10	JRTK189DN280S4 JRTKH189DN280S4
17	360600	102.16	35400	1.25	
20	310660	88.00	35200	1.40	
24	261000	73.96	34800	1.70	
28	226000	64.04	34200	1.95	
33	188300	53.36	33400	2.4	
39	160600	45.50	32600	2.8	
42	150000	42.51	32200	3.0	
23	275800	78.14	28700	1.05	JRTK169DN280S4 JRTKH169DN280S4
26	240200	68.07	28700	1.20	
29	214300	60.74	28500	1.30	
34	182700	51.77	28200	1.55	
42	151400	42.89	27600	1.85	
49	129200	36.61	27100	2.2	
55	113800	32.25	26500	2.5	
62	101500	28.77	26000	2.8	
73	86500	24.52	25300	3.3	
47	134200	38.02	14000	1.20	JRTK159DN280S4 JRTKF159DN280S4 JRTKA159DN280S4 JRTKAF159DN280S4
57	110400	31.30	14100	1.45	
65	97500	27.62	14100	1.65	
75	84500	23.95	14000	1.90	
84	75200	21.31	13900	2.1	
97	64800	18.37	13700	2.5	
120	52600	14.92	13300	3.0	
141	44600	12.65	13000	3.4	
57	110700	31.37	9350	1.05	JRTK129DN280S4 JRTKF129DN280S4 JRTKA129DN280S4 JRTKAF129DN280S4
64	97600	27.68	9580	1.20	
75	84300	23.91	9750	1.35	
84	74600	21.15	9820	1.55	
100	62700	17.77	9840	1.85	
124	50600	14.35	9750	2.1	
140	45100	12.79	9220	1.65	
166	37900	10.74	9110	1.85	
206	30600	8.68	8910	2.1	

Output speed n_a [r/min]	Output torque T_a lbf in	Ratio i	Permitted overhung load F_{Ra} [1] lbf	Service factor f_B	Model
125HP					
17	451000	102.16	31900	1.00	JRTK189DN280M4 JRTKH189DN280M4
20	388500	88.00	32200	1.15	
24	326500	73.96	32200	1.35	
28	282700	64.04	32000	1.55	
33	235500	53.36	31600	1.90	
39	200800	45.50	31000	2.2	
42	187600	42.51	30800	2.4	
46	170200	38.57	30400	2.6	
29	268100	60.74	26000	1.05	JRTK169DN280M4 JRTKH169DN280M4
34	228500	51.77	26100	1.25	
42	189300	42.89	25900	1.50	
49	161600	36.61	25600	1.75	
55	142300	32.25	25200	2.0	
62	127000	28.77	24900	2.2	
73	108200	24.52	24300	2.6	
88	89600	20.32	23500	3.2	
103	76500	17.34	2900	3.7	
57	138100	31.30	12600	1.15	JRTK159DN280M4 JRTKF159DN280M4 JRTKA159DN280M4 JRTKAF159DN280M4
65	121900	27.62	12700	1.30	JRTK159DN280M4 JRTKF159DN280M4 JRTKA159DN280M4 JRTKAF159DN280M4
74	105700	23.95	12800	1.50	
84	94000	21.31	12800	1.70	
97	81000	18.37	12800	1.95	
120	65800	14.92	12600	2.4	
141	55800	12.65	12300	2.7	
75	105500	23.91	8400	1.10	JRTK129DN280M4 JRTKF129DN280M4 JRTKA129DN280M4 JRTKAF129DN280M4
84	93300	21.15	8630	1.25	
100	78400	17.77	8840	1.45	
124	63300	14.35	8940	1.70	
140	56400	12.79	8400	1.35	
166	47400	10.74	8420	1.50	
206	38300	8.68	8350	1.65	
150HP					
24	390400	73.96	29600	1.15	JRTK189DN315S4 JRTKH189DN315S4
28	338100	64.04	29800	1.30	
34	281700	53.36	29700	1.55	
39	240200	45.50	29400	1.85	
42	224400	42.51	29300	1.95	JRTK189DN315S4 JRTKH189DN315S4
46	203600	38.57	29000	2.2	JRTK189DN315S4 JRTKH189DN315S4
54	175400	33.23	28500	2.5	
64	147400	27.92	27800	3.0	
35	273300	51.77	23900	1.05	JRTK169DN315S4 JRTKH169DN315S4
42	226400	42.89	24100	1.25	
49	193200	36.61	24000	1.45	
56	170200	32.25	23900	1.65	JRTK169DN315S4 JRTKH169DN315S4
62	151900	28.77	23700	1.85	JRTK169DN315S4 JRTKH169DN315S4
73	129400	24.52	23300	2.2	
88	107200	20.32	22700	2.6	
103	91500	17.34	22100	3.1	

Output speed n_a [r/min]	Output torque T_a lbf in	Ratio i	Permitted overhung load F_{Ra} [1] lbf	Service factor f_B	Model
150HP					
75	126400	23.95	11600	1.25	JRTK159DN315S4 JRTKF159DN315S4 JRTKA159DN315S4 JRTKAF159DN315S4
84	112500	21.31	11800	1.40	JRTK159DN315S4
97	96900	18.37	11900	1.65	JRTKF159DN315S4
120	78700	14.92	11800	2.0	JRTKA159DN315S4
141	66800	12.65	11700	2.2	JRTKAF159DN315S4
175HP					
28	394200	64.04	27600	1.10	
34	328500	53.36	27900	1.35	JRTK189DN315M4 JRTKH189DN315M4
39	280100	45.50	27900	1.60	
42	261700	42.51	27800	1.70	JRTK189DN315M4
46	237400	38.51	27700	1.85	JRTKH189DN315M4
54	204500	33.23	27300	2.2	
64	171900	27.92	26800	2.6	JRTK189DN315M4
74	148800	24.18	26300	2.8	JRTKH189DN315M4
89	124000	20.15	25600	3.1	
104	105700	17.18	24900	3.5	
42	264000	42.89	22400	1.05	JRTK169DN315M4
49	225300	36.61	22500	1.25	JRTKH169DN315M4
56	198500	32.25	22600	1.45	JRTK169DN315M4
62	177100	28.77	22500	1.60	JRTKH169DN315M4
73	150900	24.52	22300	1.90	JRTK169DN315M4
88	125000	20.32	21900	2.3	JRTKH169DN315M4
103	106700	17.34	21400	2.6	
75	147400	23.95	10500	1.10	JRTK159DN315M4 JRTKF159DN315M4
84	131100	21.31	10700	1.20	JRTA159DN315M4 JRTKAF159DN315M4
98	113000	18.37	11000	1.40	JRTK159DN315M4
120	91800	14.92	11100	1.75	JRTKF159DN315M4 JRTA159DN315M4
142	77900	12.65	11100	1.95	JRTKAF159DN315M4
200HP					
34	376000	53.36	26000	1.20	
39	320600	45.50	26300	1.40	
54	234100	33.23	26200	1.90	JRTK189DN315L4
64	196700	27.92	25900	2.2	JRTKH189DN315L4
74	170300	24.18	25500	2.5	
89	141900	20.15	24900	2.7	
104	121000	17.18	24300	3.0	
49	258000	36.61	21000	1.10	
73	172800	24.52	21300	1.65	JRTK169DN315L4
88	143100	20.32	21000	2.0	JRTKH169DN315L4
103	122200	17.34	20700	2.3	
97	129400	18.37	10100	1.25	JRTK159DN315L4
120	105100	14.92	10400	1.50	JRTKF159DN315L4 JRTKA159DN315L4
141	89100	12.65	10500	1.70	JRTKAF159DN315L4
225HP					
34	423100	53.36	24200	1.05	
39	360700	45.50	24700	1.25	
54	263400	33.23	25000	1.70	JRTK189DN315L4
64	221300	27.92	24900	2.0	JRTKH189DN315L4
74	191600	24.18	24600	2.2	
89	159700	20.15	24200	2.4	
104	136200	17.18	23700	2.7	

Output speed n_a [r/min]	Output torque T_a lbf in	Ratio i	Permitted overhung load F_{Ra} [1] lbf	Service factor f_B	Model
225HP					
49	290200	36.61	19500	1.00	
73	194400	24.52	20300	1.45	JRTK169DN315L4
88	161000	20.32	20200	1.75	JRTKH169DN315L4
103	137400	17.34	20000	2.1	
97	145600	18.37	9150	1.10	JRTK159DN315L4
120	118300	14.92	9630	1.35	JRTKF159DN315L4 JRTKA159DN315L4
141	100300	12.65	9850	1.50	JRTKAF159DN315L4
250HP					
39	399900	45.50	23200	1.10	JRTK189DN315H4 JRTKH189DN315H4
54	292000	33.23	23900	1.50	JRTK189DN315H4 JRTKH189DN315H4
64	245400	27.92	23900	1.80	
74	212500	24.18	23800	2.0	JRTK189DN315H4
89	177000	20.15	23500	2.2	JRTKH189DN315H4
104	150900	17.18	23100	2.4	
73	215500	24.52	19300	1.30	JRTK169DN315H4 JRTKH169DN315H4
88	178500	20.32	19400	1.60	JRTK169DN315H4
103	152400	17.34	19300	1.85	JRTKH169DN315H4
120	131100	14.92	8900	1.20	JRTK159DN315H4 JRTKF159DN315H4 JRTKA159DN315H4
142	111200	12.65	9230	1.35	JRTKAF159DN315H4
275HP					
39	440100	45.50	21600	1.00	JRTK189DN315H4 JRTKH189DN315H4
54	321400	33.23	22700	1.40	JRTK189DN315H4 JRTKH189DN315H4
64	270100	27.92	23000	1.65	
74	233800	24.18	23000	1.80	JRTK189DN315H4
89	194900	20.15	22800	2.0	JRTKH189DN315H4
104	166100	17.18	22500	2.2	
73	237200	24.52	18300	1.20	JRTK169DN315H4 JRTKH169DN315H4
88	196500	20.32	18500	1.45	JRTK169DN315H4
103	167700	17.34	18600	1.70	JRTKH169DN315H4
120	144300	14.92	8170	1.10	JRTK159DN315H4 JRTKF159DN315H4
142	122400	12.65	8610	1.25	JRTKA159DN315H4 JRTKAF159DN315H4
300HP					
54	350800	33.23	21600	1.25	JRTK189DN315H4 JRTKH189DN315H4
64	294800	27.92	22000	1.50	
74	255300	24.18	22100	1.65	JRTK189DN315H4
89	212700	20.15	22100	1.85	JRTKH189DN315H4
104	181300	17.18	21900	2.0	
73	258900	24.52	17200	1.10	JRTK169DN315H4 JRTKH169DN315H4
88	214500	20.32	17700	1.30	JRTK169DN315H4
103	183100	17.34	17900	1.55	JRTKH169DN315H4
120	157500	14.92	7440	1.00	JRTK159DN315H4 JRTKF159DN315H4
141	133600	12.65	7990	1.15	JRTKA159DN315H4 JRTKAF159DN315H4

6. Features size table

JRTK39..~JRTK159..

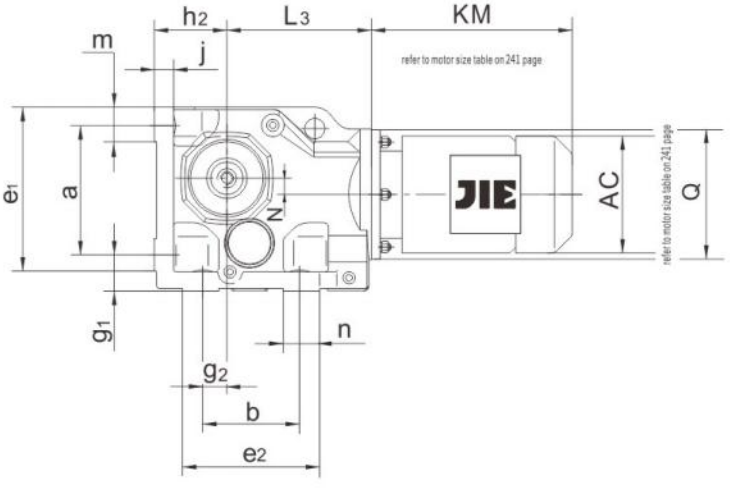

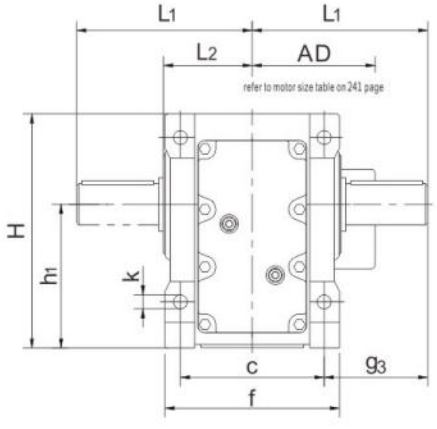

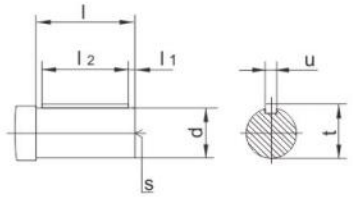

JRTKA49B..~JRTKA159B..

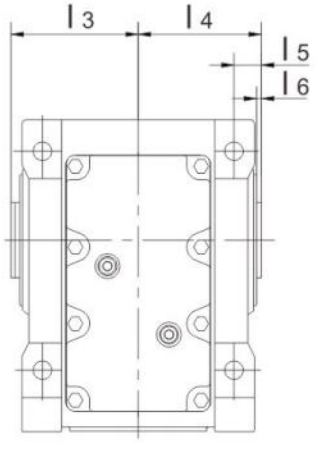

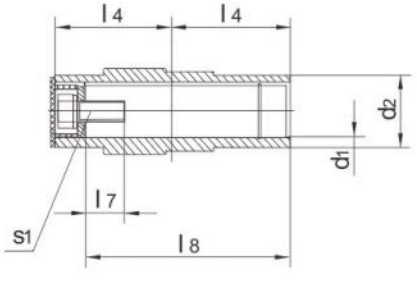

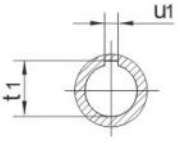

Model	a b c	e_1 e_2 f	g_1 g_2 g_3	h_1 h_2	j	k	m n	Shaft dimension				
								d	l	l_1 l_2	s	t u
JRTK39..	115 110 100	148 141 120	32 28 60	$100_{-0.5}$ $63_{-0.5}$	16	11	33 36	Φ1.000in-0.0005	50	0.33in 1.31in	D3/8-16x0.86in	1.11in 0.250in
JRTK49.. JRTKA49B..	130 130 120	163.5 177 145	37 35 75	$112_{-0.5}$ $71_{-0.5}$	18	11	35 47	Φ1.250in-0.0005	60	0.28in 1.69in	D1/2-13x1.12in	1.36in 0.250in
JRTK59.. JRTKA59B..	150 130 130	186 174.5 157	45 30 88	$132_{-0.5}$ $80_{-0.5}$	21	13.5	40 44.5	Φ1.375in-0.0005	70	0.47in 1.81in	D1/2-13x1.12in	1.51in 0.3125in
JRTK69.. JRTKA69B..	160 120 140	200 181 170	45 30 101	$140_{-0.5}$ $90_{-0.5}$	24	13.5	40 61	Φ1.625in-0.001	80	0.45in 2.25in	D5/8-11x1.37in	1.79in 0.375in
JRTK79.. JRTKA79B..	200 150 165	255 205 200	55 40 123.5	$180_{-0.5}$ $112_{-0.5}$	27	17.5	55 55	Φ2.000in-0.001	100	0.66in 2.63in	D3/4-10x1.61in	2.22in 0.500in
JRTK89.. JRTKA89B..	233 180 180	295 250 230	70 55 150	$212_{-0.5}$ $132_{-0.5}$	32	22	62 80	Φ2.375in-0.001	120	0.55in 3.63in	D3/4-10x1.61in	2.65in 0.625in
JRTK99.. JRTKA99B..	295 240 240	374 306 290	75 75 171	265_{-1} $160_{-0.5}$	36	26	79 66	Φ2.875in-0.001	140	0.69in 4.13in	D3/4-10x1.61in	3.20in 0.750in
JRTK109.. JRTKA109B..	360 280 270	448 380 340	95 95 212	315_{-1} $200_{-0.5}$	40	33	98 100	Φ3.625in-0.001	170	0.66in 5.38in	D1-8x2.12in	4.01in 0.875in
JRTK129.. JRTKA129B..	420 350 330	526 440 400	110 115 253	375_{-1} $225_{-0.5}$	45	39	111 100	Φ4.375in-0.001	210	1.13in 6.00in	D1-8x2.12in	4.82in 1.000in
JRTK159.. JRTKA159B..	500 380 420	634 480 500	130 140 247	450_{-1} 280_{-1}	50	39	130 100	Φ4.750in-0.001	210	0.85in 6.56in	D1-8x2.12in	5.29in 1.250in

Model	hollow shaft dimension							H	L_1 L_2	L_3	N	Q
	d_1	d_2	l_3 l_4	l_5 l_6	l_7 l_8	s_1	t_1 u_1					
JRTK39..	——					——		162	110 60	139	8.5	120
JRTK49.. JRTKA49B..	Φ1.375inH7	50	78 75	15 3	0.67 5.20	1/2-13x1.00in	1.53in 0.3125in	182.5	135 72	166	7.2	160
JRTK59.. JRTKA59B..	Φ1.500inH7	55	86 83	18 3	1.40 5.59	5/8-11x1.75in	1.67in 0.375in	213	153 80	173	13.1	160
JRTK69.. JRTKA69B..	Φ1.500inH7	55	93 90	20 3.5	1.40 6.14	5/8-11x1.75in	1.67in 0.375in	225	171 86.5	179	20	160
JRTK79.. JRTKA79B..	Φ2.000inH7	70	108 105	22.5 4	1.19 7.20	5/8-11x1.75in	2.24in 0.500in	285	206 101	202	31.3	200
JRTK89.. JRTKA89B..	Φ2.375inH7	85	123 120	30 4	1.42 8.27	3/4-10x2.00in	2.67in 0.625in	335	240 116	257	25.9	250
JRTK99.. JRTKA99B..	Φ2.750inH7	95	153 150	30 4	1.28 10.63	3/4-10x2.00in	3.05in 0.625in	409	291 146	277	32.3	300
JRTK109.. JRTKA109B..	Φ3.625inH7	118	178 175	40 2.5	1.27 12.32	3/4-10x2.00in	3.89in 0.875in	503	347 175	341	52	350
JRTK129.. JRTKA129B..	Φ4.000inH7	135	208 205	40 2.5	1.27 14.69	1-8x2.25in	4.46in 1.000in	592	418 203	390	53	450
JRTK159.. JRTKA159B..	Φ4.500inH7	155	253 250	40	1.02 18.11	1-8x2.25in	4.95in 1.000in	705	457 250	426	71.7	550

JRTKH49B..~JRTKH159B..

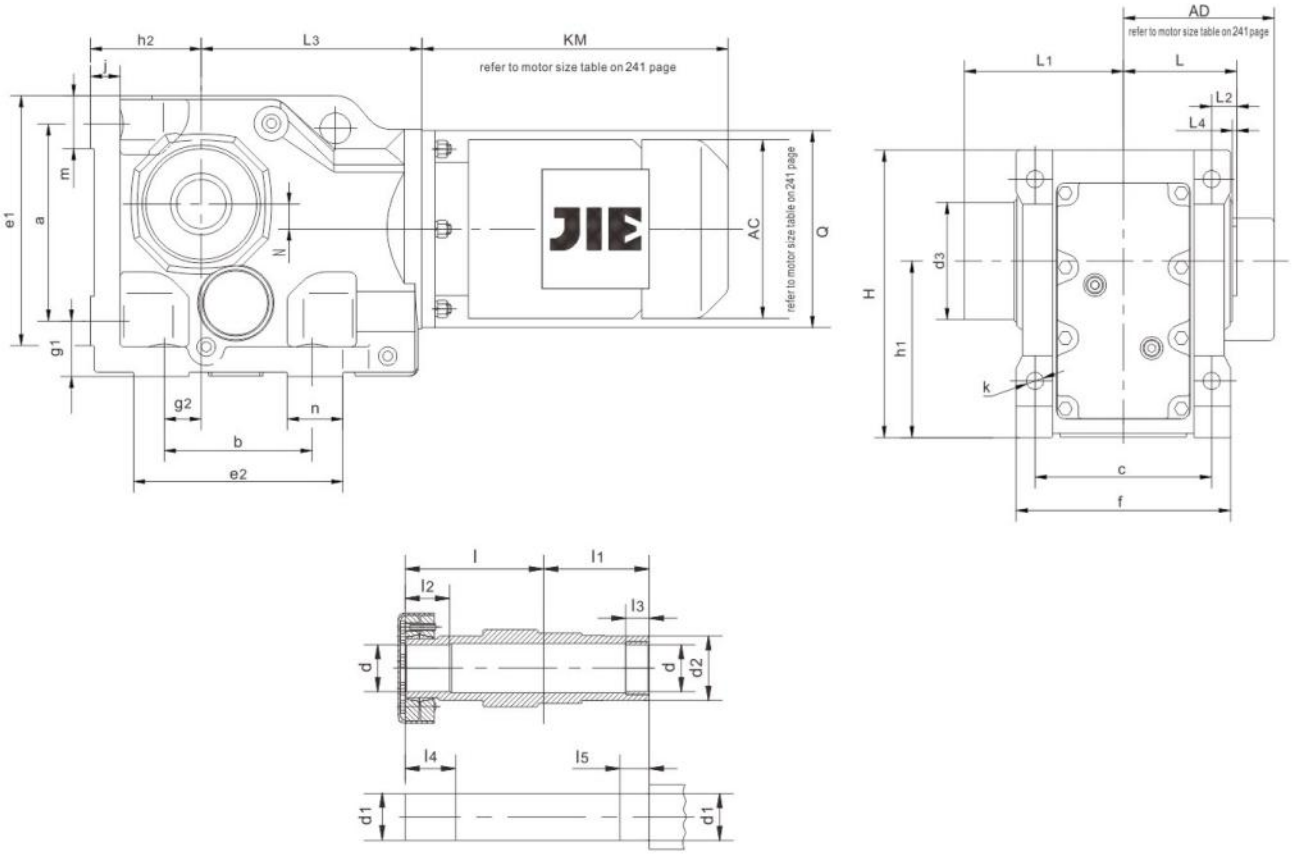

JRTKV49B..~JRTKV109B..

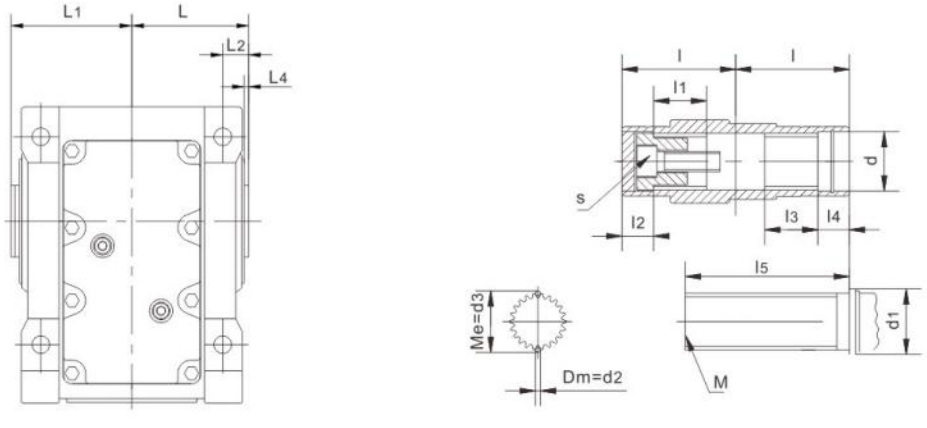

Model	a b c	e_1 e_2 f	g_1 g_2	h_1 h_2	j	k	m n	hollow shaft dimension				
								l	l_1	l_2	l_3	l_4
JRTKH49B.. JRTKV49B..	130 130 120	163.5 177 145	37 35	$112_{-0.5}$ $71_{-0.5}$	18	11	35 47	102 75	75 32	32 18	20 32	37 18
JRTKH59B.. JRTKV59B..	150 130 130	186 174.5 157	45 30	$132_{-0.5}$ $80_{-0.5}$	21	13.5	40 44.5	112 83	83 32	26 18	20 32	31 18
JRTKH69B.. JRTKV69B..	160 120 140	200 181 170	45 30	$140_{-0.5}$ $90_{-0.5}$	24	13.5	40 61	118 90	90 42	38 25	20 42	43 25
JRTKH79B.. JRTKV79B..	200 150 165	255 205 200	55 40	$180_{-0.5}$ $112_{-0.5}$	27	17.5	55 55	136 105	105 52	36 23	30 52	41 23
JRTKH89B.. JRTKV89B..	233 180 180	295 250 230	70 55	$212_{-0.5}$ $132_{-0.5}$	32	22	62 80	161 120	120 62	41 25	40 62	46 25
JRTKH99B.. JRTKV99B..	295 240 240	374 306 290	75 75	265_{-1} $160_{-0.5}$	36	26	79 66	195 150	150 72	55 25	50 72	60 25
JRTKH109B.. JRTKV109B..	360 280 270	448 380 340	95 95	315_{-1} $200_{-0.5}$	40	33	98 100	230 175	175 89	65 26	60 89	75 26
JRTKH129B..	420 350 330	526 440 400	110 115	375_{-1} $225_{-0.5}$	45	39	111 100	280 –	205 –	85 –	70 –	95 –
JRTKH159B..	500 380 420	634 480 500	130 140	450_{-1} 280_{-1}	50	39	130 100	330 –	250 –	90 –	80 –	100 –

Model	hollow shaft dimension							H	L	L_1 L_2	L_3 L_4	N	Q
	l_5	d	d_1	d_2	d_3	M	S						
JRTKH49B.. JRTKV49B..	25 115	35H7 $37_0^{+0.1}$	35h6 ≥42	50 4	- $38.92_{-0.03}^{0}$	– 35x2x30x16	– M10x30	182.5	75	120 15	166 3	7.2	160
JRTKH59B.. JRTKV59B..	25 130	40H7 $37_0^{+0.1}$	40h6 ≥42	55 4	- $38.92_{-0.03}^{0}$	– 35x2x30x16	– M10x30	213	83	136 18	173 3	13.1	160
JRTKH69B.. JRTKV69B..	25 130	40H7 $47_0^{+0.1}$	40h6 ≥52	55 4	- $48.85_{-0.03}^{0}$	– 45x2x30x21	– M16x50	225	90	142 20	179 3.5	20	160
JRTKH79B.. JRTKV79B..	35 160	50H7 $55_0^{+0.1}$	50h6 ≥62	70 4	- $54.13_{-0.03}^{0}$	– 50x2x30x24	– M16x50	285	105	176 22.5	202 4	31.3	200
JRTKH89B.. JRTKV89B..	45 180	65H7 $72_0^{+0.1}$	65h6 ≥82	85 4	- $68.96_{-0.04}^{0}$	– 65x2x30x31	– M20x60	335	120	199 30	257 4	25.9	250
JRTKH99B.. JRTKV99B..	55 240	75H7 $72_0^{+0.1}$	75h6 ≥90	95 4	- $74.15_{-0.04}^{0}$	– 70x2x30x34	– M20x60	409	150	229 30	277 4	32.3	300
JRTKH109B.. JRTKV109B..	70 290	95H7 $90_0^{+0.1}$	95h6 ≥105	118 6	196 $90.99_{-0.04}^{0}$	– 85x3x30x27	– M20x60	503	175	246 40	341 2.5	52	350
JRTKH129B..	80 –	105H7 –	105h6 –	135 –	229 –	– –	– –	592	205	299 40	390 2.5	53	450
JRTKH159B..	90 –	125H7 –	125h6 –	155 –	315 –	– –	– –	705	250	354 40	426 0	71.7	550

JRTKVZ...Spline shaft is a cording to DIN standard .If you need GB or ISO standard . Please contact with us.

JRTKA39..~JRTKA109..

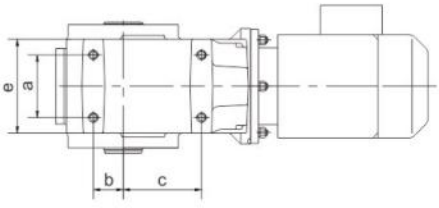

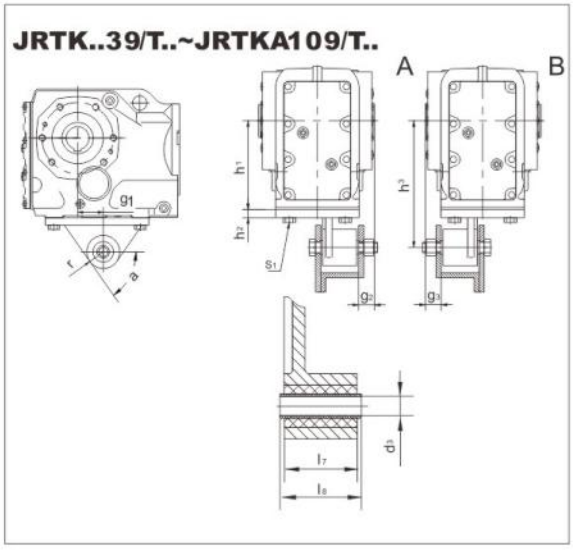

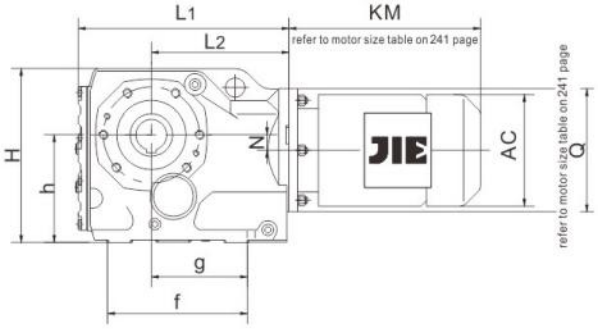

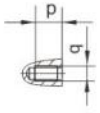

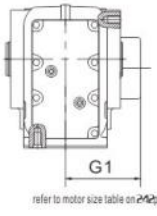

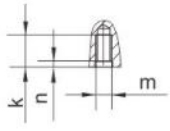

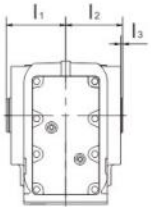

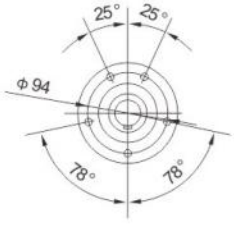

JRTKA39..

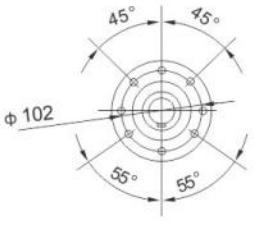

JRTKA49..

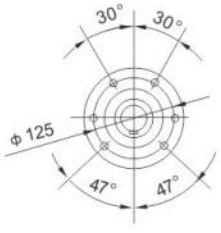

JRTKA59..
JRTKA69..

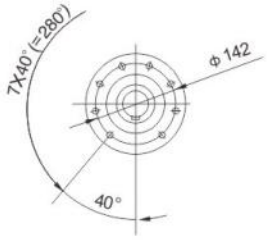

JRTKA79..

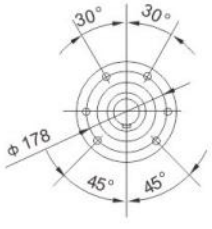

JRTKA89..



JRTKA99..

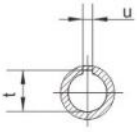

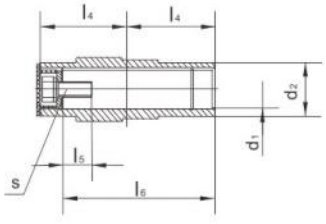

型 号 Model	a b c	e f g	h	k m n	p q	Hollow shaft dimension				Torque arm form				H L_1 L_2	N Q
						d_1 d_2	l_1 l_2 l_3	l_4 l_5 l_6	s t u	g_1 g_2 g_3	h_1 h_2 h_3	d_3 l_7 l_8	r s_1 α		
JRTKA39.. JRTK..39/T..	60 35 82	100 147 97	$100_{-0.5}$	20 M10 4	12 M8	Φ1.250inH7 Φ45	63 60 2.5	60 0.68in 105	7/16-14x1.00in 1.37in 0.250in	23.5 20 20	$100_{-0.5}$ 10 $140^{+0.2}_{-0.7}$	10.4 ±0.1 31 $36_{-0.3}$	22.5 M10X25 60°	162 213.5 139	8.5 120
JRTKA49.. JRTK..49/T..	70 40 100	114 177 122	$112_{-0.5}$	20 M10 4	12 M8	Φ1.375inH7 Φ50	78 75 3	75 0.67in 132	1/2-13x1.00in 1.53in 0.3125in	30 20 20	$112_{-0.5}$ 12 $160^{+0.2}_{-0.7}$	10.4 ±0.1 31 $36_{-0.3}$	22.5 M10X30 55°	183 243.5 166	7.2 160
JRTKA59.. JRTK..59/T..	88 47 105	129 191.5 124.5	$132_{-0.5}$	25 M12 5	20 M12	Φ1.500inH7 Φ55	86 83 3	83 1.40in 142	5/8-11x1.75in 1.67in 0.375in	40 18 18	$132_{-0.5}$ 13 $192^{+0.2}_{-0.7}$	16.4±0.08 54 $60_{-0.3}$	29 M12X35 55°	212 267.5 173	13.1 160
JRTKA69.. JRTK..69/T..	88 42 110	136 196 129	$140_{-0.5}$	25 M12 5	20 M12	Φ1.500inH7 Φ55	94 90 3.5	90 1.40in 156	5/8-11x1.75in 1.67in 0.375in	45 25 25	$140_{-0.5}$ 13 $200^{+0.2}_{-0.7}$	16.4±0.08 54 $60_{-0.3}$	29 M12X35 55°	225 274 179	20 160
JRTKA79.. JRTK..79/T..	102 48 122	155 205 140	$180_{-0.5}$	32 M16 6	20 M12	Φ2.000inH7 Φ70	108 105 4	105 1.19in 183	5/8-11x1.75in 2.24in 0.500in	52.5 25 25	$180_{-0.5}$ 14 $250^{+0.2}_{-0.7}$	16.4±0.08 54 $60_{-0.3}$	29 M16X40 60°	284 312 202	31.3 200
JRTKA89.. JRTK..89/T..	118 65 160	182 274 186	$212_{-0.5}$	32 M16 6	26 M16	Φ2.375inH7 Φ85	123 120 4	120 1.42in 210	3/4-10x2.00in 2.67in 0.625in	60 30 30	$212_{-0.5}$ 16 $300^{+0.2}_{-0.7}$	25±0.08 72 $80_{-0.3}$	41 M16X45 60°	335 386.5 257	25.9 250
JRTKA99.. JRTK..99/T..	160 83 165	244 309 196	265_{-1}	36 M20 6	26 M16	Φ2.750inH7 Φ95	153 150 4	150 1.28in 270	3/4-10x2.00in 3.05in 0.625in	70 40 40	265_{-1} 17 $350^{+0.2}_{-1.2}$	25 ±0.08 92 $100_{-0.3}$	41 M20X50 50°	410 433.5 277	32.3 300
JRTKA109.. JRTK..109/T..	190 100 190	266 370 230	315_{-1}	44 M24 8	-	Φ3.625inH7 Φ118	178 175 2.5	175 1.27in 313	3/4-10x2.00in 3.89in 0.875in	74 45 45	315_{-1} 20 $450^{+0.5}_{-1.5}$	25 ±0.08 92 $100_{-0.3}$	41 M24X60 55°	500 537 341	52 350

JRTKH39..~JRTKH109..

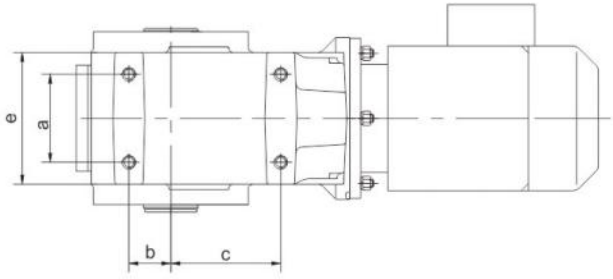

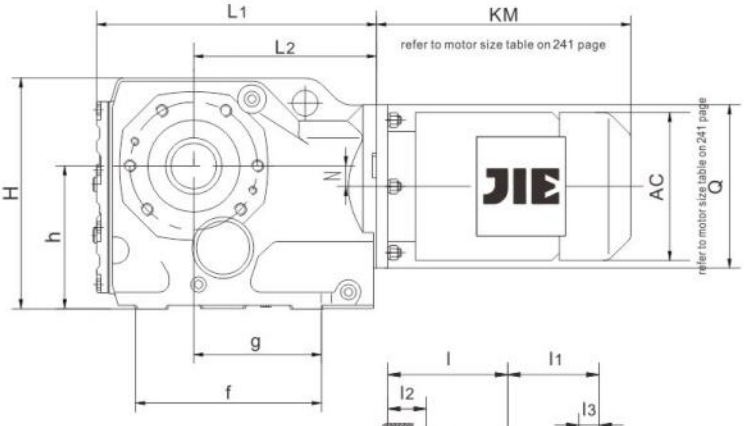

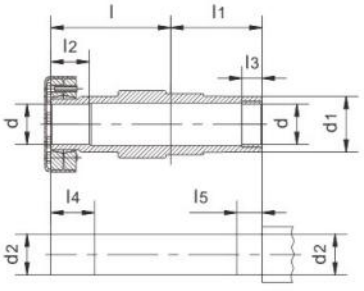

JRTK..39/T..~JRTKA109/T..

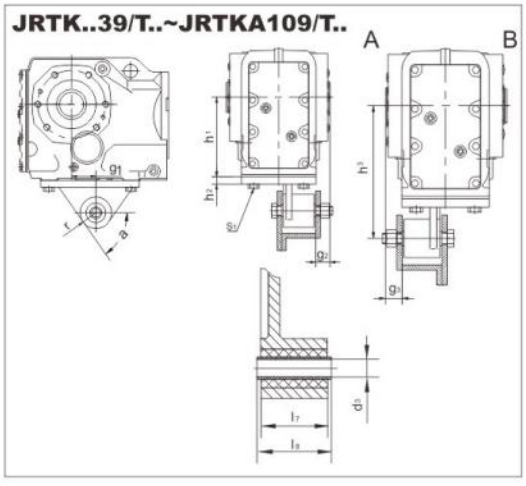

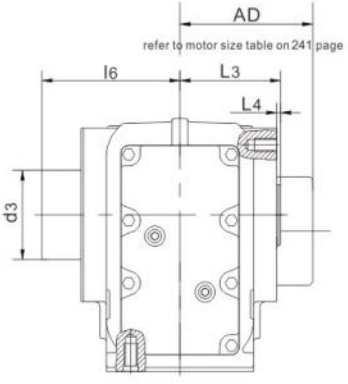

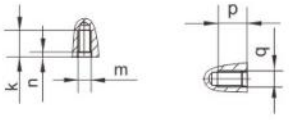

JRTKV39..~JRTKV159..

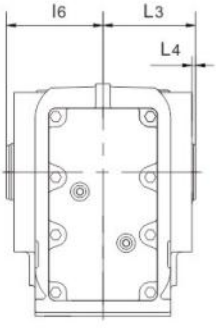

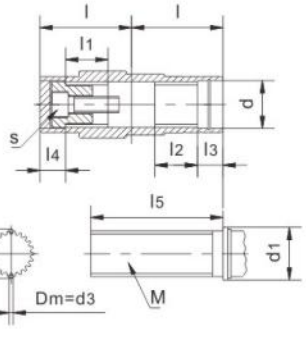

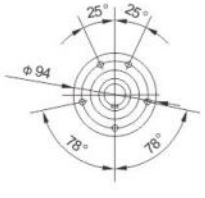

JRTK..39..

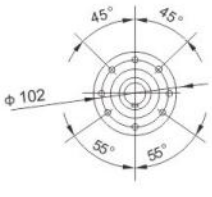

JRTK..49..

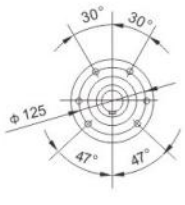

JRTK..59..
JRTK..69..

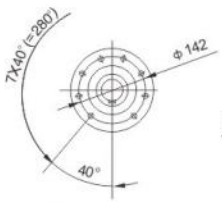

JRTK..79..

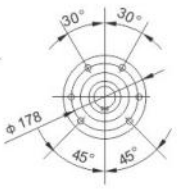

JRTK..89..

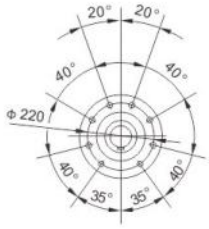

JRTK..99..

Model	a b c	e f g	h	k m n	p q	l	l_1	l_2	l_3	l_4	l_5	l_6
JRTKH39.. JRTKV39..	60 35 82	100 147 97	$100_{-0.5}$	20 M10 4	12 M8	86 60	60 25	31 25	20 18	36 18	25 85	104 62
JRTKH49.. JRTKV49..	70 40 100	114 177 122	$112_{-0.5}$	20 M10 4	12 M8	102 75	75 32	32 32	20 18	37 18	25 115	120 77
JRTKH59.. JRTKV59..	88 47 105	129 191.5 124.5	$132_{-0.5}$	25 M12 5	20 M12	112 83	83 32	26 32	20 18	31 18	25 130	136 85
JRTKH69.. JRTKV69..	88 42 110	136 196 129	$140_{-0.5}$	25 M12 5	20 M12	118 90	90 42	38 42	20 25	43 25	25 130	142 90
JRTKH79.. JRTKV79..	102 48 122	155 205 140	$180_{-0.5}$	32 M16 6	20 M12	136 105	105 52	36 52	30 23	41 23	35 160	176 105
JRTKH89.. JRTKV89..	118 65 160	182 274 186	$212_{-0.5}$	32 M16 6	26 M16	161 120	120 62	41 62	40 25	46 25	45 180	199 120
JRTKH99.. JRTKV99..	160 83 165	244 309 196	$265_{-0.5}$	36 M20 6	26 M16	195 150	150 72	55 72	50 25	60 25	55 240	229 150
JRTKH109.. JRTKV109..	190 100 190	266 370 230	$315_{-0.5}$	44 M24 8	–	230 175	175 89	65 89	60 26	75 26	70 290	246 178

Model	d	d_1	d_2	d_3	s	M	g_1 g_2 g_3	h_1 h_2 h_3	d_3 l_7 l_8	r s_1 a	L_1 L_2 L_3	L_4 H	N Q
JRTKH39..	30H7	45	30h6	80	–	–	23.5 20	$100_{-0.5}$ 10	10.4 ± 0.1 31	22.5 M10X25	213.5 139	2.5	8.5
JRTKV39..	$37^{+0.1}_{0}$	⩾42	$33.03^{0}_{-0.03}$	2.75	M10x30	30x1.25x30x22	20	$140^{+0.2}_{-0.7}$	$36_{-0.3}$	60°	60	162	120
JRTKH49..	35H7	50	35h6	88	–	–	30 20	$112_{-0.5}$ 10	10.4 ± 0.1 31	22.5 M10X25	243.5 166	3	7.2
JRTKV49..	$37^{+0.1}_{0}$	⩾42	$38.92^{0}_{-0.03}$	4	M10x30	35x2x30x16	20	$160^{+0.2}_{-0.7}$	$36_{-0.3}$	55°	75	182.5	160
JRTKH59..	40H7	55	40h6	100	–	–	40 18	$132_{-0.5}$ 13	16.4 ± 0.08 54	29 M12X35	267.5 173	3	13.1
JRTKV59..	$37^{+0.1}_{0}$	⩾42	$38.92^{0}_{-0.03}$	4	M10x30	35x2x30x16	18	$192^{+0.2}_{-0.7}$	$60_{-0.3}$	55°	83	213	160
JRTKH69..	40H7	55	40h6	100	–	–	45 25	$140_{-0.5}$ 13	16.4 ± 0.08 54	29 M12X35	274 179	3.5	20
JRTKV69..	$47^{+0.1}_{0}$	⩾52	$48.85^{0}_{-0.03}$	4	M16x50	45x2x30x21	25	$200^{+0.2}_{-0.7}$	$60_{-0.3}$	55°	90	225	160
JRTKH79..	50H7	70	50h6	124	–	–	52.5 25	$180_{-0.5}$ 14	16.4 ± 0.08 54	29 M16X40	312 202	4	31.3
JRTKV79..	$55^{+0.1}_{0}$	⩾62	$54.13^{0}_{-0.03}$	4	M16x50	50x2x30x24	25	$250^{+0.2}_{-0.7}$	$60_{-0.3}$	60°	105	285	200
JRTKH89..	65H7	85	65h6	165	–	–	60 30	$212_{-0.5}$ 16	25 ± 0.08 72	41 M16X45	386.5 257	4	25.9
JRTKV89..	$72^{+0.1}_{0}$	⩾82	$68.96^{0}_{-0.04}$	4	M20x60	65x2x30x31	30	$300^{+0.2}_{-0.7}$	$80_{-0.3}$	60°	120	335	250
JRTKH99..	75H7	95	75h6	200	–	–	70 40	265_{-1} 17	25 ± 0.08 92	41 M20X50	433.5 277	4	32.3
JRTKV99..	$72^{+0.1}_{0}$	⩾90	$74.15^{0}_{-0.04}$	4	M20x60	70x2x30x34	40	$350^{+0.2}_{-0.7}$	$100_{-0.3}$	50°	150	409	300
JRTKH109..	95H7	118	95h6	196	–	–	74 45	315_{-1} 20	25 ± 0.08 92	41 M24X60	537 341	2.5	52
JRTKV109..	$90^{+0.1}_{0}$	⩾105	$90.99^{0}_{-0.04}$	6	M20x60	85x3x30x27	45	$450^{+0.5}_{-1.5}$	$100_{-0.3}$	55°	175	500	350

JRTKV...Spline shaft is a cording to DIN standard .If you need GB or ISO standard . Please contact with us.

JRTKHF39..~JRTKHF159..

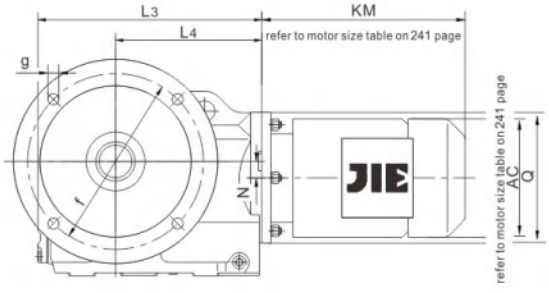

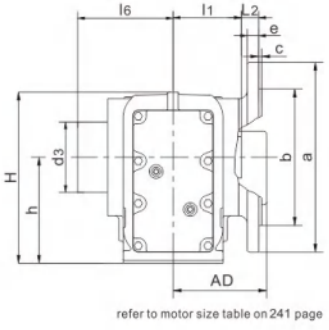

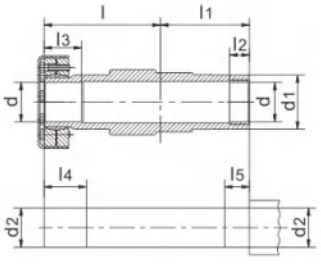

JRTKVF39..~JRTKVF109..

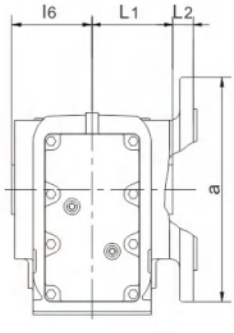

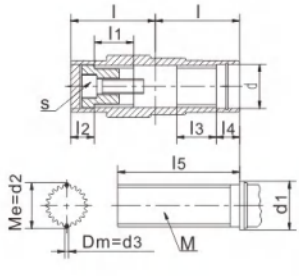

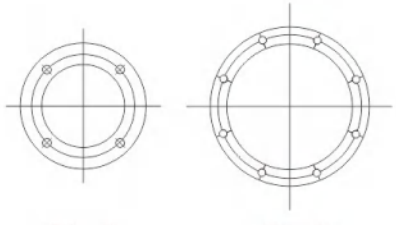

Flg.1 Flg.2

Flange form

Model	Flange form	a b	c e	f g h	Hollow shaft dimension													H	L_1 L_2 L_3	L_4 N Q
					l	l_1	l_2	l_3	l_4	l_5	l_6	d	d_1	d_2	d_3	m	s			
JRTKHF39..	Flg.1	160	3.5	130 9	86	60	20	31	36	25	104	30H7	45	30h6	80	-	-	162	60 24	139 8.5
JRTKVF39..		110j6	10	$100_{-0.5}$	60	25	18	25	18	85	62	$37^{+0.10}_{0}$	≥42	$33.03^{0}_{-0.03}$	2.75	30×1.25×30×22	M10X30		213.5	120
JRTKHF49..	Flg.1	200	3.5	165 11	102	75	20	32	37	25	120	35H7	50	35h6	88	-	-	182.5	75 25	166 7.2
JRTKVF49..		130j6	10	$112_{-0.5}$	75	32	18	32	18	115	77	$37^{+0.10}_{0}$	≥42	$38.92^{0}_{-0.03}$	4	35×2×30×16	M10X30		243.5	160
JRTKHF59..	Flg.1	250	4	215 13.5	112	83	20	26	31	25	136	40H7	55	40h6	100	-	-	213	83 23.5	173 13.1
JRTKVF59..		180j6	15	$132_{-0.5}$	83	32	18	32	18	130	85	$37^{+0.10}_{0}$	≥42	$38.92^{0}_{-0.03}$	4	35×2×30×16	M10X30		267.5	160
JRTKHF69..	Flg.1	250	4	215 13.5	118	90	20	38	43	25	142	40H7	55	40h6	100	-	-	225	90 23	179 20
JRTKVF69..		180j6	15	$140_{-0.5}$	90	42	25	42	25	130	90	$47^{+0.10}_{0}$	≥52	$48.85^{0}_{-0.03}$	4	45×2×30×21	M16X50		274	160
JRTKHF79..	Flg.1	300	4	265 13.5	136	105	30	36	41	35	176	50H7	70	50h6	124	-	-	285	105 37	202 31.3
JRTKVF79..		230j6	16	$180_{-0.5}$	105	52	23	52	23	160	105	$55^{+0.10}_{0}$	≥62	$54.13^{0}_{-0.03}$	4	50×2×30×24	M16X50		312	200
JRTKHF89..	Flg.1	350	5	300 17.5	161	120	40	41	46	45	199	65H7	85	65h6	165	-	-	335	120 30	257 25.9
JRTKVF89..		250h6	18	$212_{-0.5}$	120	62	25	62	25	180	120	$72^{+0.10}_{0}$	≥82	$68.96^{0}_{-0.04}$	4	65×2×30×31	M20X60		386.5	250
JRTKHF99..	Flg.2	450	5	400 17.5	195	150	50	55	60	55	229	75H7	95	75h6	200	-	-	409	150 41.5	277 32.3
JRTKVF99..		350h6	22	$265_{-0.5}$	150	72	25	72	25	240	150	$72^{+0.10}_{0}$	≥90	$74.15^{0}_{-0.04}$	4	70×2×30×34	M20X60		433.5	300
JRTKHF109..	Flg.2	450	5	400 17.5	230	175	60	65	75	70	246	95H7	118	95h6	196	-	-	500	175 41	341 52
JRTKVF109..		350h6	25	$315_{-0.5}$	175	89	26	89	26	290	178	$90^{+0.10}_{0}$	≥105	$90.99^{0}_{-0.04}$	6	85×3×20×27	M20X60		537	350
JRTKHF129..	Flg.2	550	5	500 17.5	280	205	70	85	95	80	299	105H7	135	105h6	229	–	–	592	205 51	390 53
		450h6	22	375_{-1}	–	–	–	–	–	–	–	–	–	–	–	–	–		615	450
JRTKHF159..	Flg.2	660	6	600 22	330	250	80	90	100	90	354	125H7	155	125h6	315	–	–	705	250 60	705 71.7
		550h6	28	450_{-1}	–	–	–	–	–	–	–	–	–	–	–	–	–		706	550

JRTKVF...Spline shaft is a cording to DIN standard .If you need GB or ISO standard . Please contact with us.

JRTKF39..~JRTKF159..

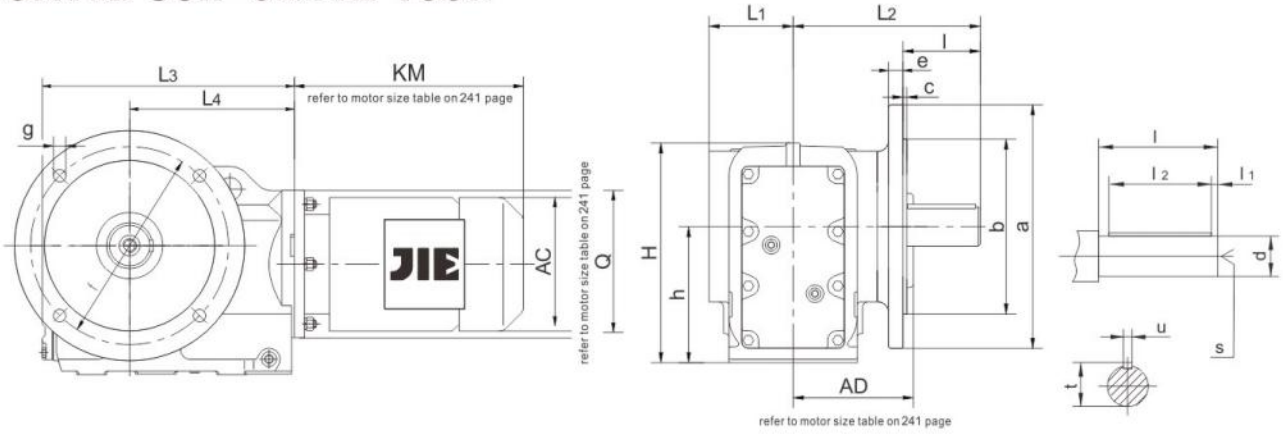

JRTKAF39..~JRTKAF159..

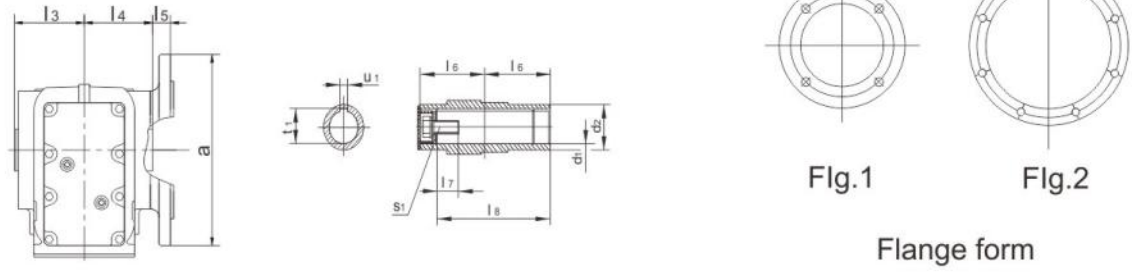

Flg.1 Flg.2

Flange form

Model	Flange form	a b	c e	f g h	Shaft dimension d l	 l_1 l_2	 s	 t u	Hollow shaft dimension d_1 d_2	 l_3 l_4 l_5	 l_6 l_7 l_8	 s_1	 t_1 u_1	H	L_1 L_2 L_3	L_4 N Q
JRTKF39..	Flg.1	160	3.5	130	Φ1.000-0.0005	5	M10	28	Φ1.250inH7	63	60	7/16-14x1.00in	1.37in	162	57.5	139
JRTKAF39..		110j6	10	9	50	40		8	Φ45	60	0.68in		0.250in		134	8.5
				100						24	105				213.5	120
JRTKF49..	Flg.1	200	3.5	165	Φ1.250-0.0005	3.5	M10	33	Φ1.375inH7	78	75	1/2-13x1.00in	1.53in	182.5	72	166
JRTKAF49..		130j6	10	11	60	50		8	Φ50	75	0.67in		0.3125in		160	7.2
				112						25	132				243.5	160
JRTKF59..	Flg.1	250	4	215	Φ1.375-0.0005	7	M12	38	Φ1.500inH7	86	83	5/8-11x1.75in	1.67in	213	80	173
JRTKAF59..		180j6	15	13.5	70	56		10	Φ55	83	1.40in		0.375in		177	13.1
				132						23.5	142				267.5	160
JRTKF69..	Flg.1	250	4	215	Φ1.625-0.001	5	M16	43	Φ1.500inH7	94	90	5/8-11x1.75in	1.67in	225	86.5	179
JRTKAF69..		180j6	15	13.5	80	70		12	Φ55	90	1.40in		0.375in		193	20
				140						23	156				274	160
JRTKF79..	Flg.1	300	4	265	Φ2.000-0.001	10	M16	53.5	Φ2.000inH7	108	105	5/8-11x1.75in	2.24in	285	101	202
JRTKAF79..		230j6	16	13.5	100	80		14	Φ70	105	1.19in		0.500in		242	31.3
				180						37	183				312	200
JRTKF89..	Flg.1	350	5	300	Φ2.375-0.001	5	M20	64	Φ2.375inH7	123	120	3/4-10x2.00in	2.67in	335	138	257
JRTKAF89..		250h6	18	17.5	120	110		18	Φ85	120	1.42in		0.625in		270	25.9
				212						30	210				386.5	250
JRTKF99..	Flg.2	450	5	400	Φ2.875-0.001	7.5	M20	74.5	Φ2.750inH7	153	150	3/4-10x2.00in	3.05in	409	171	277
JRTKAF99..		350h6	22	17.5	140	125		20	Φ95	150	1.28in		0.625in		332	32.3
				265						41.5	270				433.5	300
JRTKF109..	Flg.2	450	5	400	Φ3.625-0.001	5	M24	95	Φ3.625inH7	178	115	3/4-10x2.00in	3.89in	500	175	341
JRTKAF109..		350h6	25	17.5	170	160		25	Φ118	175	1.27in		0.875in		386	52
				315						41	313				537	350
JRTKF129..	Flg.2	550	5	500	Φ4.375-0.001	15	M24	116	Φ4.000inH7	208	205	1-8x2.25in	4.46in	592	203	390
JRTKAF129..		450h6	22	17.5	210	180		28	Φ135	205	1.27in		1.000in		466	53
				375-1						51	373				615	450
JRTKF159..	Flg.2	660	6	600	Φ4.750-0.001	5	M24	127	Φ4.500inH7	253	250	1-8x2.25in	4.95in	705	253	426
JRTKAF159..		550h6	28	22	210	200		32	Φ155	250	1.02in		1.000in		520	71.7
				450-1						60	460				706	550

JRTKAZ39..~JRTKAZ159..

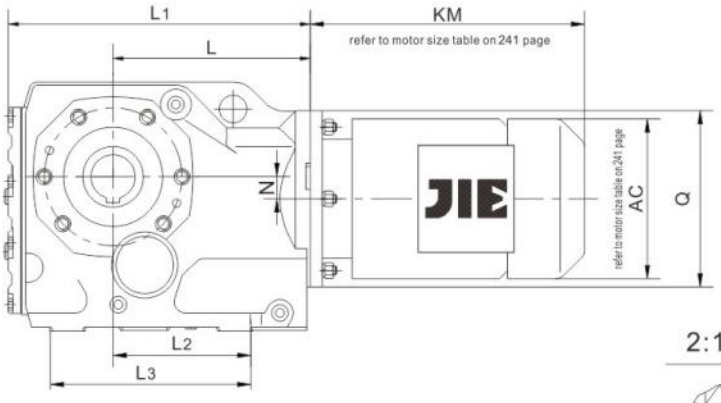

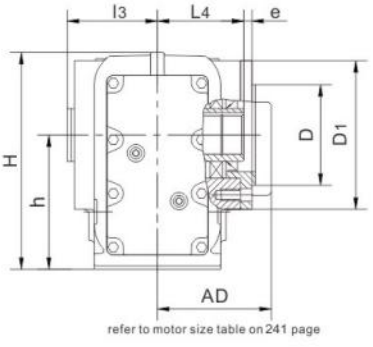

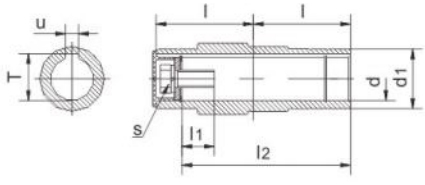

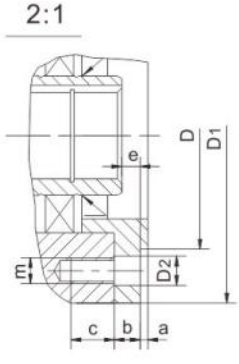

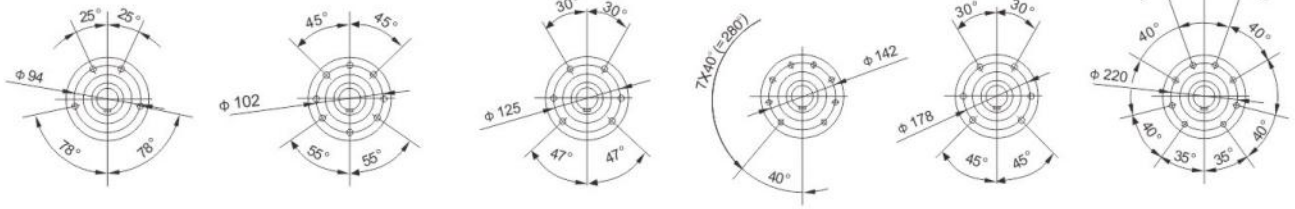

JRTK..Z39.. JRTK..Z49.. JRTK..Z59.. JRTK..Z69.. JRTK..Z79.. JRTK..Z89.. JRTK..Z99..

JRTKHZ39..~JRTKHZ159..

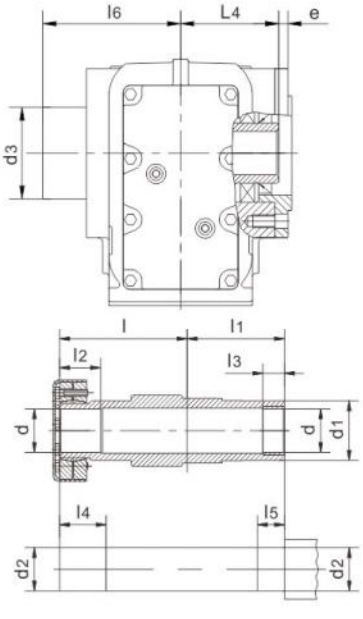

JRTKVZ39..~JRTKVZ109..

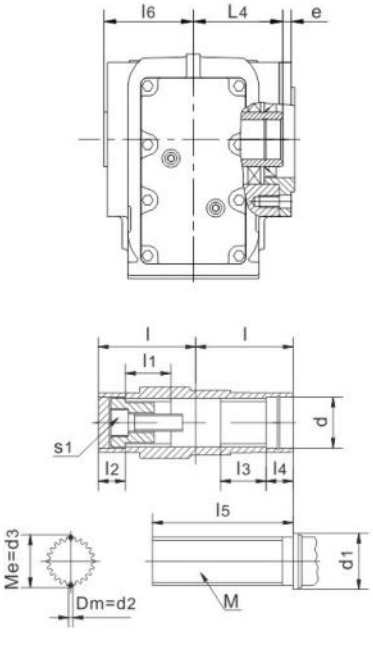

Model	a b c	e m D	D_1 D_2 L	L_1 L_2 L_3	L_4 f n	H	l	l_1	l_2	l_3	l_4	l_5
JRTKAZ39..	3	9	110	213.5	60	162	60	0.68in	105	63	–	–
JRTKHZ39..	11.5	M8	9	97	94		86	60	31	20	36	25
JRTKVZ39..	12	80j6	139	147	8.5		60	25	18	25	18	85
JRTKAZ49..	3	8.5	120	243.5	75	182.5	75	0.67in	132	78	–	–
JRTKHZ49..	11	M8	9	120	102		102	75	32	20	37	25
JRTKVZ49..	12	80j6	166	175	7.2		75	32	18	32	18	115
JRTKAZ59..	3.5	9	155	267.5	90	213	83	1.4in	142	86	–	–
JRTKHZ59..	12	M12	13.5	124.5	125		112	83	26	20	31	25
JRTKVZ59..	20	105j6	173	191.5	13.1		83	32	18	32	18	130
JRTKAZ69..	3.5	8.5	155	274	105	225	90	1.40in	156	94	–	–
JRTKHZ69..	12	M12	13.5	129	125		118	90	38	20	43	25
JRTKVZ69..	20	105j6	179	196	20		90	42	25	42	25	130
JRTKAZ79..	3.5	10	170	312	105	285	105	1.19in	183	108	–	–
JRTKHZ79..	14	M12	13.5	140	142		136	105	36	30	41	35
JRTKVZ79..	20	125j6	202	205	31.3		105	52	23	52	23	160
JRTKAZ89..	4	11	215	386.5	120	335	120	1.42in	210	123	–	–
JRTKHZ89..	15	M16	17.5	186	178		161	120	41	40	46	45
JRTKVZ89..	26	155j6	257	274	25.9		120	62	25	62	25	180
JRTKAZ99..	4	14	260	433.5	150	409	150	1.28in	270	153	–	–
JRTKHZ99..	18	M16	17.5	196	220		195	150	55	50	60	55
JRTKVZ99..	26	180j6	277	309	32.5		150	72	25	72	25	240
JRTKAZ109..	4	–12	304	537	175	500	175	1.27in	313	178	–	–
JRTKHZ109..	22	M20	22	230	260		230	175	65	60	75	70
JRTKVZ109..	30	210j6	341	370	52		175	89	26	89	26	290
JRTKAZ129..	5	0	350	615	205	592	205	1.27in	373	208	–	–
JRTKHZ129..	30 28	M20 250h6	22 390	288 440	300 53		280	205	85	70	95	80
JRTKAZ159..	5	–14	400	706	250	705	250	1.02in	460	253	–	–
JRTKHZ159..	28 36	M24 290h6	26 426	298 480	340 71.7		330	250	90	80	100	90

型 号 Model	l_6	d	d_1	d_2	d_3	u	T	S	S_1	M
JRTKAZ39..	–	Φ1.250inH7	45	–	–	0.250in	1.37in	7/16-14x1.00in	–	–
JRTKHZ39..	104	Φ30mmH7	45	30h6	80	-	-	-	–	–
JRTKVZ39..	62	Φ37mm+0.1	≥42	2.75	$33.03^{\ 0}_{-0.03}$	-	-	-	M10×30	30×1.25×30×22
JRTKAZ49..	–	Φ1.375inH7	50	–	–	0.3125in	1.53in	1/2-13x1.00in	–	–
JRTKHZ49..	120	Φ35mmH7	50	35h6	88	-	-	-	–	–
JRTKVZ49..	77	Φ37mm+0.1	≥42	4	$38.92^{\ 0}_{-0.03}$	-	-	-	M10×30	35×2×30×16
JRTKAZ59..	–	Φ1.500inH7	55	–	–	0.375in	1.67in	5/8-11x1.75in	–	–
JRTKHZ59..	136	Φ40mmH7	55	40h6	100	-	-	-	–	–
JRTKVZ59..	85	Φ37mm+0.1	≥42	4	$38.92^{\ 0}_{-0.03}$	-	-	-	M10×30	35×2×30×16
JRTKAZ69..	–	Φ1.500inH7	55	–	–	0.375in	1.67in	5/8-11x1.75in	–	–
JRTKHZ69..	142	Φ40mmH7	55	40h6	100	-	-	-	–	–
JRTKVZ69..	90	Φ47mm+0.1	≥52	4	$48.85^{\ 0}_{-0.03}$	-	-	-	M16×50	45×2×30×21
JRTKAZ79..	–	Φ2.000inH7	70	–	–	0.500in	2.24in	5/8-11x1.75in	–	–
JRTKHZ79..	176	Φ50mmH7	70	50h6	124	-	-	-	–	–
JRTKVZ79..	105	Φ55mm+0.1	≥62	4	$54.13^{\ 0}_{-0.03}$	-	-	-	M16×50	50×2×30×24
JRTKAZ89..	–	Φ2.375inH7	85	–	–	0.625in	2.67in	3/4-10x2.00in	–	–
JRTKHZ89..	199	Φ65mmH7	85	65h6	165	-	-	-	–	–
JRTKVZ89..	120	Φ72mm+0.1	≥82	4	$68.96^{\ 0}_{-0.04}$	-	-	-	M20×60	65×2×30×31
JRTKAZ99..	–	Φ2.750inH7	95	–	–	0.625in	3.05in	3/4-10x2.00in	–	–
JRTKHZ99..	229	Φ75mmH7	95	75h6	200	-	-	-	–	–
JRTKVZ99..	150	Φ72mm+0.1	≥90	4	$74.15^{\ 0}_{-0.04}$	-	-	-	M20×60	70×2×30×34
JRTKAZ109..	–	Φ3.625inH7	118	–	–	0.875in	3.89in	3/4-10x2.00in	–	–
JRTKHZ109..	246	Φ95mmH7	118	95h6	196	-	-	-	–	–
JRTKVZ109..	178	Φ90mm+0.1	≥105	6	$90.99^{\ 0}_{-0.04}$	-	-	-	M20×60	85×3×30×27
JRTKAZ129..	–	Φ4.000inH7	135	–	–	1.000in	4.46in	1-8x2.25in	–	–
JRTKHZ129..	299	Φ105mmH7	135	105h6	229	-	-	-	–	–
JRTKAZ159..	–	Φ4.500inH7	155	–	–	1.000in	4.95in	1-8x2.25in	–	–
JRTKHZ159..	354	Φ125mmH7	155	125h6	315	-	-	-	–	–

JRTKVZ...Spline shaft is a cording to DIN standard .If you need GB or ISO standard . Please contact with us.

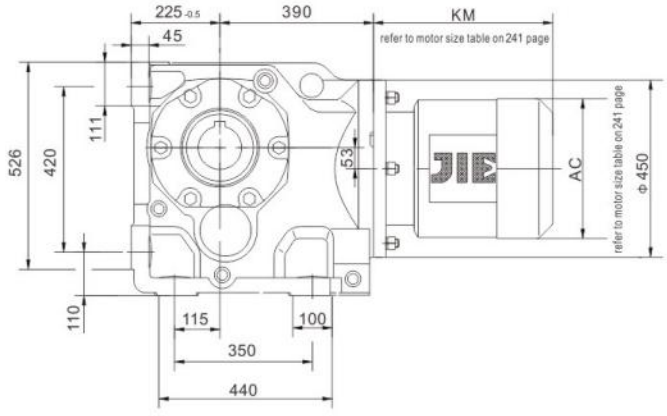

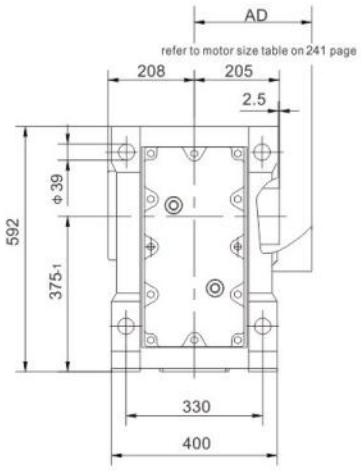

JRTK..129/T..

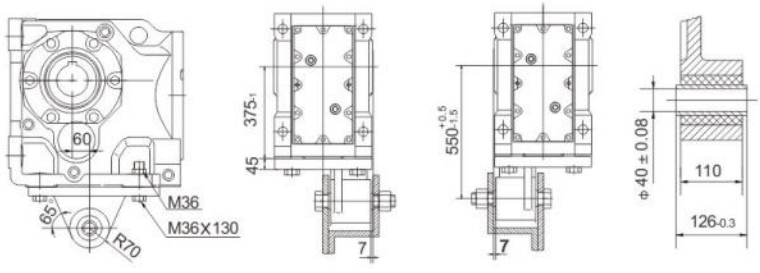

JRTKA129..

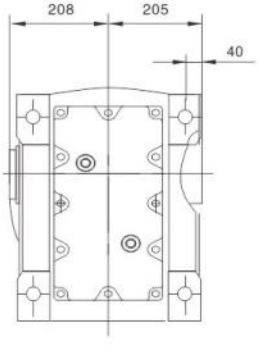

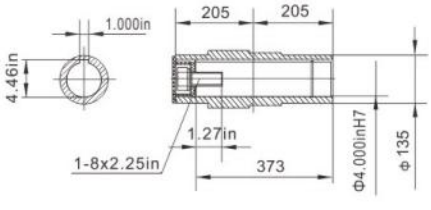

JRTKH129..

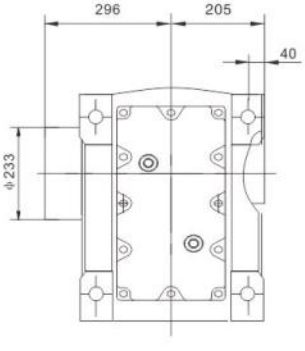

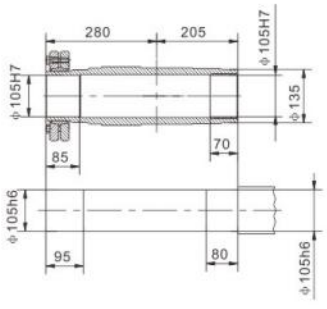

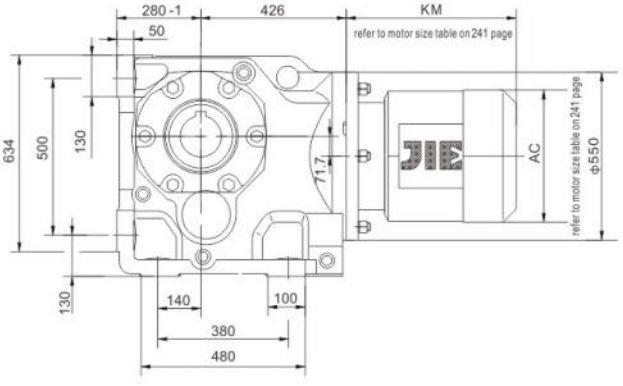

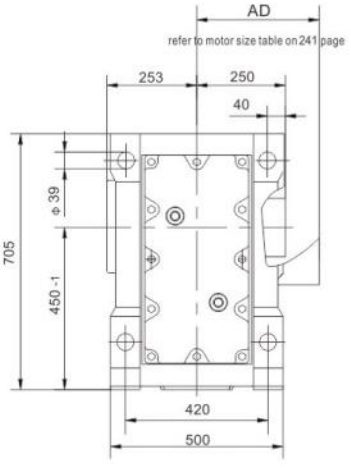

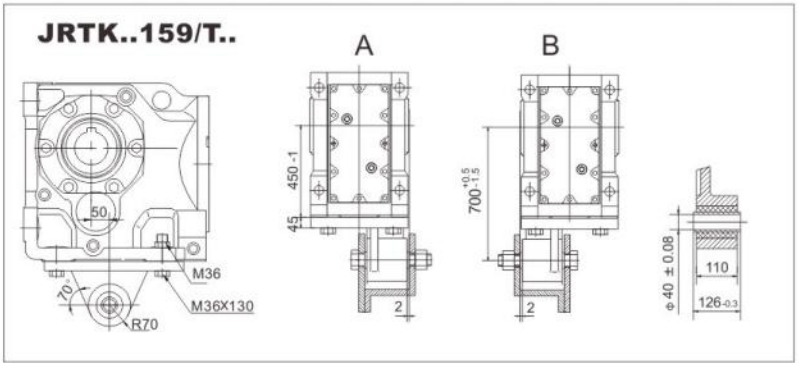

JRTKA159..

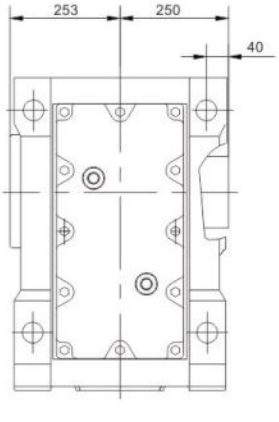

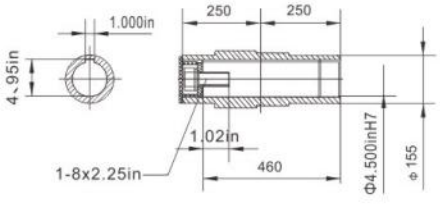

JRTKH159..

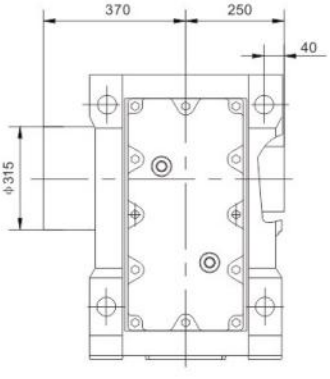

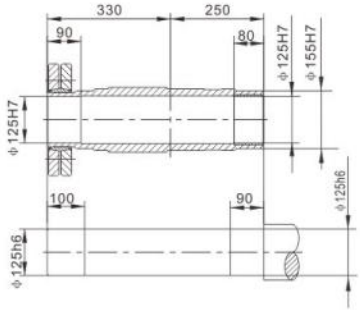

JRTK169..

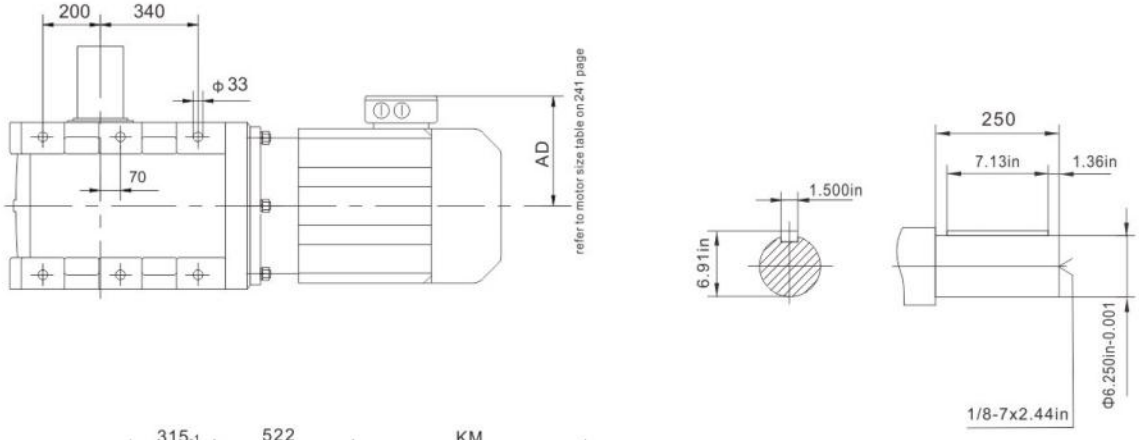
200
340
Φ33
70
AD
refer to motor size table on 241 page
250
7.13in
1.36in
1.500in
6.91in
Φ6.250in-0.001
1/8-7x2.44in

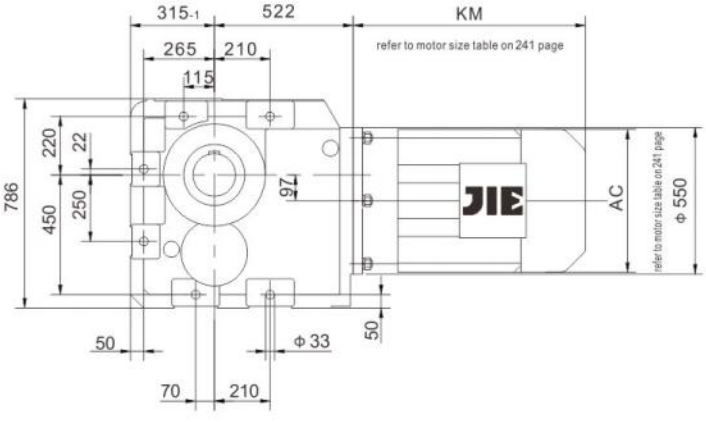
315-1
522
KM
refer to motor size table on 241 page
265
210
115
786
220
22
450
250
97
AC
Φ550
50
Φ33
70
210

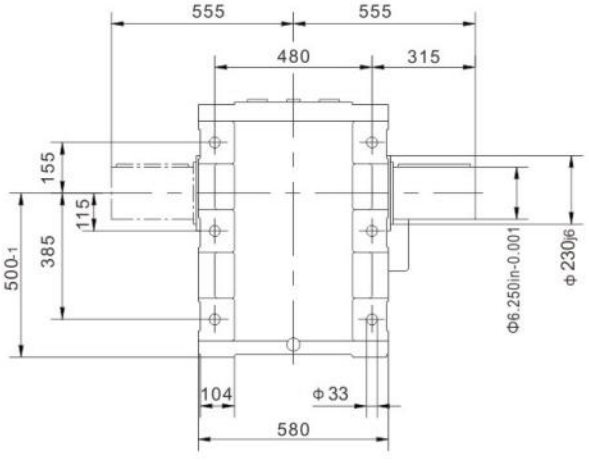
555
555
480
315
155
115
500-1
385
Φ6.250in-0.001
Φ230
104
Φ33
580

JRTKH169..

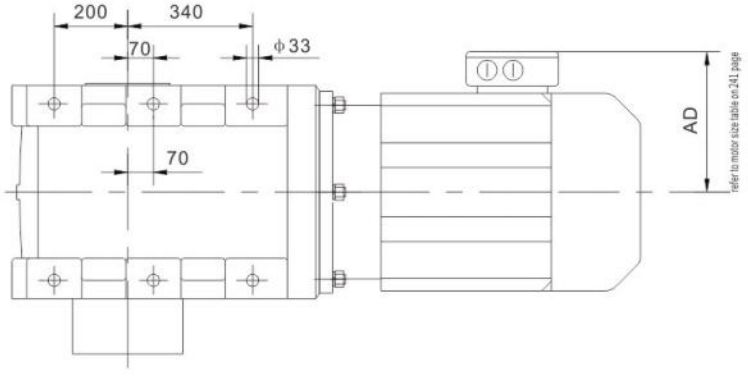
200
340
70
ϕ33
70
AD
refer to motor size table on 241 page

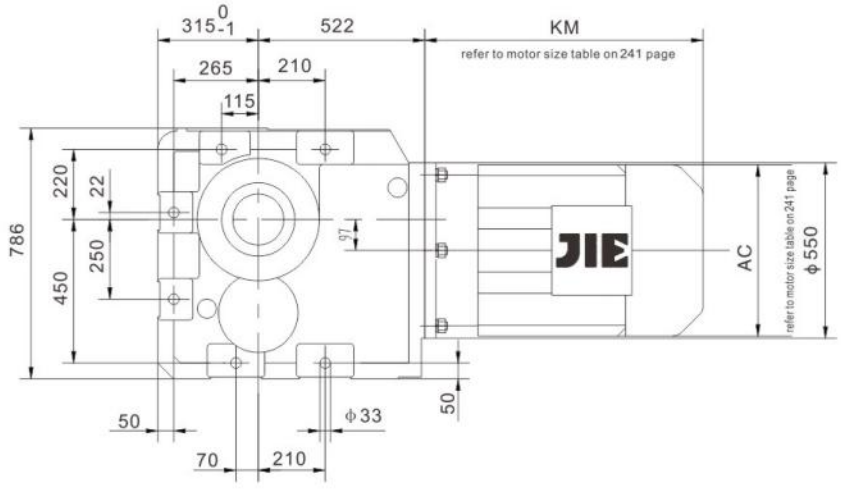
315 0 -1
522
KM
refer to motor size table on 241 page
265
210
115
220
22
250
450
786
ϕ7
AC
ϕ550
refer to motor size table on 241 page
50
50
ϕ33
70
210

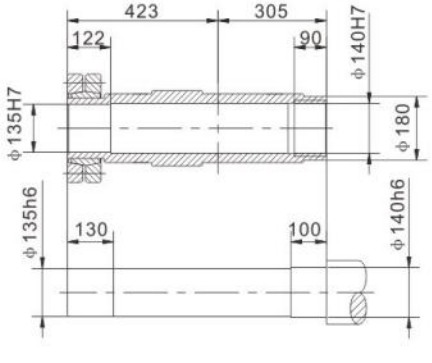
423
305
122
90
ϕ140H7
ϕ135H7
ϕ180
ϕ135h6
ϕ140h6
130
100

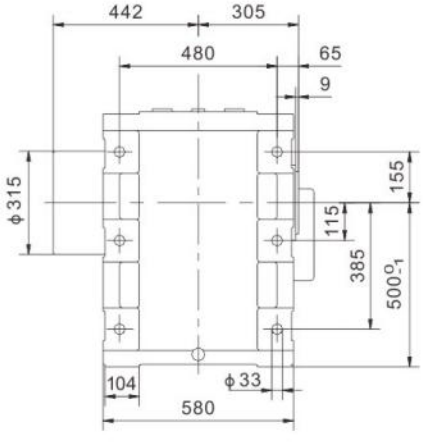
442
305
480
65
9
ϕ315
155
115
385
500 0 -1
104
ϕ33
580

JRTK189..

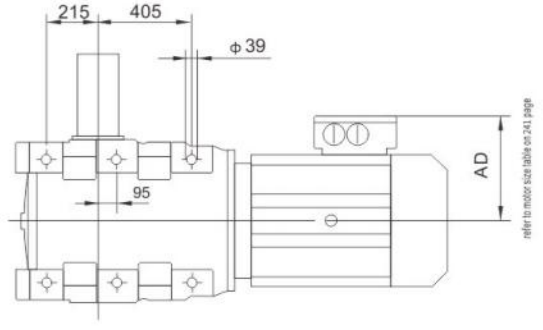
215
405
Φ39
95
AD
refer to motor size table on 241 page

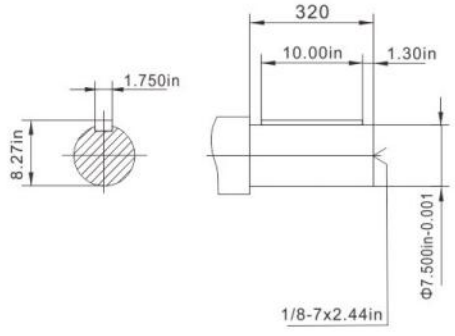
320
10.00in
1.30in
1.750in
8.27in
Φ7.500in-0.001
1/8-7x2.44in

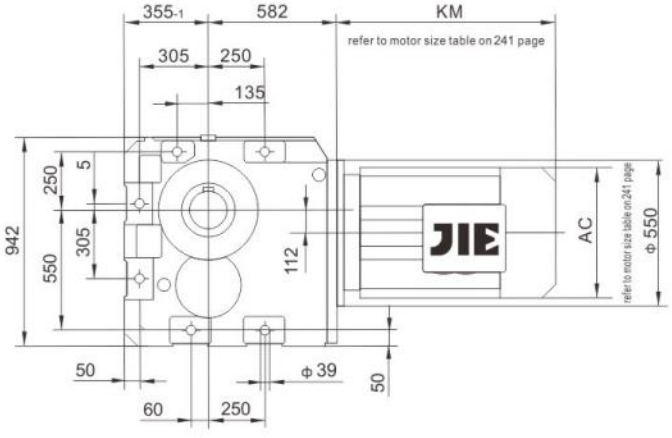
355-1
582
KM
refer to motor size table on 241 page
305
250
135
942
550
250
5
305
112
AC
Φ550
refer to motor size table on 241 page
50
Φ39
50
60
250

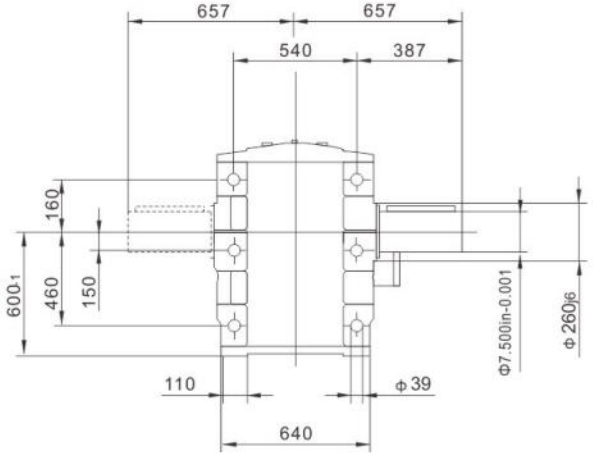
657
657
540
387
160
600-1
460
150
Φ7.500in-0.001
Φ260j6
110
Φ39
640

JRTKH189..

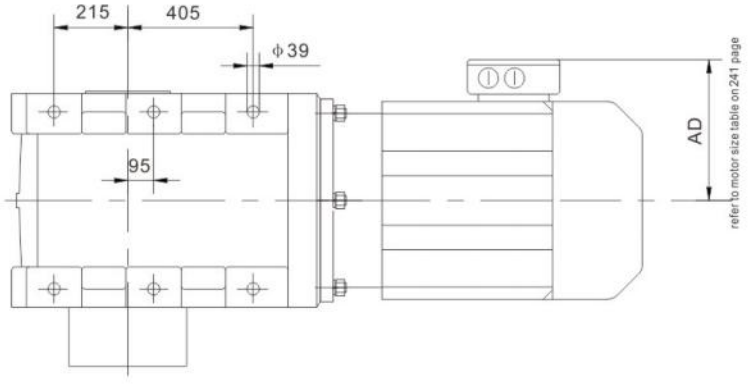
215
405
ϕ39
95
AD
refer to motor size table on 241 page

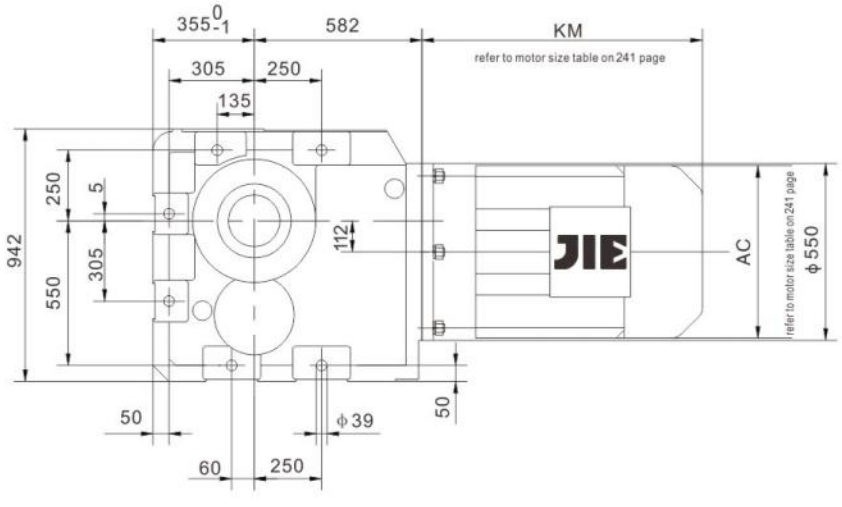
355 0 -1
582
KM
refer to motor size table on 241 page
305
250
135
942
250
5
305
550
112
AC
ϕ550
refer to motor size table on 241 page
50
ϕ39
50
60
250

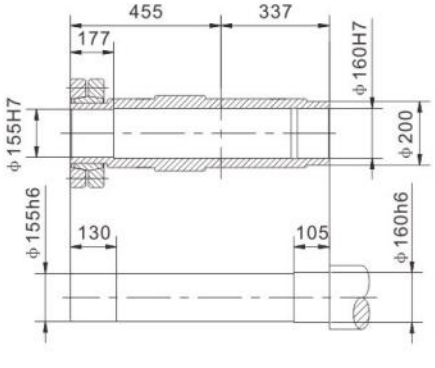
455
337
177
ϕ160H7
ϕ155H7
ϕ200
ϕ155h6
130
105
ϕ160h6

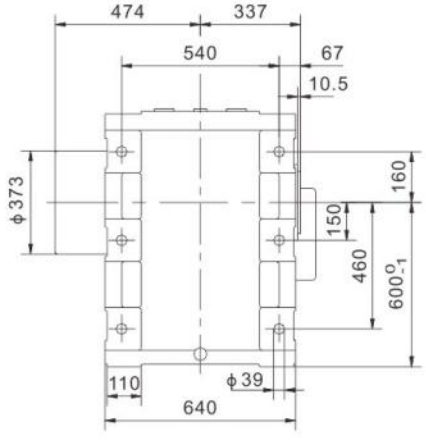
474
337
540
67
10.5
ϕ373
160
150
460
600 0 -1
110
ϕ39
640

JRTK..AD..



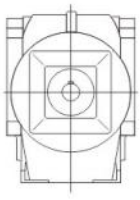

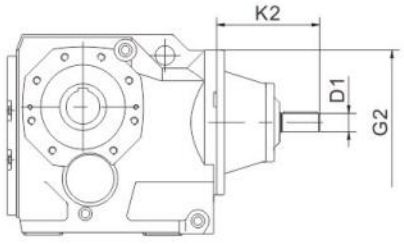

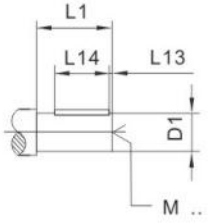

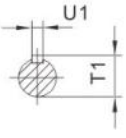

		G2	K2	D1	L1	L13	L14	T1	U1	M
JRTK..39	AD1	120	102	0.625in	40	4	32	0.70in	0.1875in	1/4-20x0.63
	AD2		130	0.750in	40	4	32	0.83in	0.1875in	1/4-20x0.63
JRTK..49 JRTK..59 JRTK..69	AD2	160	123	0.750in	40	4	32	0.83in	0.1875in	1/4-20x0.63
	AD3		159	0.875in	50	5	40	0.96in	0.1875in	5/16-18x0.87
JRTK..79	AD2	200	116	0.750in	40	4	32	0.83in	0.1875in	1/4-20x0.63
	AD3		151	0.875in	50	5	40	0.96in	0.1875in	5/16-18x0.87
	AD4		224	1.375in	80	5	70	1.51in	0.3125in	1/2-13x1.12
JRTK..89	AD2	250	111	0.750in	40	4	32	0.83in	0.1875in	1/4-20x0.63
	AD3		156	0.875in	60	5	50	0.96in	0.1875in	5/16-18x0.87
	AD4		219	1.375in	80	5	70	1.51in	0.3125in	1/2-13x1.12
	AD5		292	1.625in	110	10	70	1.79in	0.375in	5/8-11x1.38
JRTK..99	AD3	300	151	0.875in	60	5	50	0.96in	0.1875in	5/16-18x0.87
	AD4		214	1.375in	80	5	70	1.51in	0.3125in	1/2-13x1.12
	AD5		287	1.625in	110	10	70	1.79in	0.375in	5/8-11x1.38
	AD6		327	1.875in	110	10	80	2.09in	0.50in	5/8-11x1.38
JRTK..109	AD3	350	145	0.875in	60	5	50	0.96in	0.1875in	5/16-18x0.87
	AD4		208	1.375in	80	5	70	1.51in	0.3125in	1/2-13x1.12
	AD5		281	1.625in	110	10	70	1.79in	0.375in	5/8-11x1.38
	AD6		321	1.875in	110	10	80	2.09in	0.50in	5/8-11x1.38
JRTK..129	AD4	450	193	1.375in	80	5	70	1.51in	0.3125in	1/2-13x1.12
	AD5		266	1.625in	110	10	70	1.79in	0.375in	5/8-11x1.38
	AD6		306	1.875in	110	10	80	2.09in	0.50in	5/8-11x1.38
	AD7		300	2.125in	110	10	90	2.35in	0.50in	3/4-10x1.61
	AD8		383	2.750in	140	15	110	3.03in	0.625in	3/4-10x1.61
JRTK..159 JRTK..169 JRTK..189	AD5	550	258	1.625in	110	10	70	1.79in	0.375in	5/8-11x1.38
	AD6		298	1.875in	110	10	80	2.09in	0.50in	5/8-11x1.38
	AD7		292	2.125in	110	10	90	2.35in	0.50in	3/4-10x1.61
	AD8		374	2.750in	140	15	110	3.03in	0.625in	3/4-10x1.61

JRTK..R..

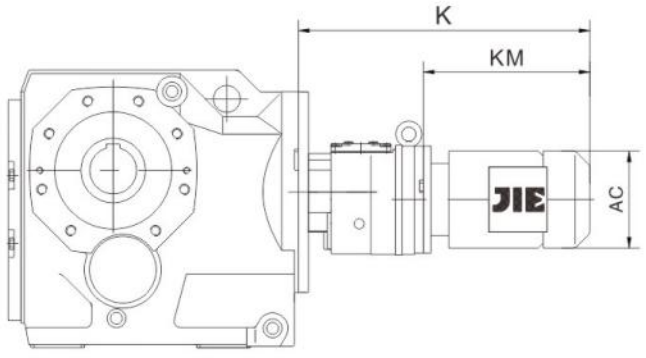

		AC	K	KM
JRTK..39R19	DN63..	120	373	198
	DN71..	135	403	228
	DN80.	156	454	279
JRTK..49R39 JRTK..59R39	DN63..	120	363	198
	DN71..	135	393	228
	DN80..	156	444	279
JRTK..69R39	DN63..	120	363	198
	DN71..	135	393	228
	DN80..	156	444	279
	DN90..	175	516	351
JRTK..79R39	DN63..	120	355	198
	DN71..	135	385	228
	DN80..	156	436	279
	DN90..	175	508	351
JRTK..89R59	DN63..	120	408	192
	DN71..	135	437	221
	DN80..	156	488	272
	DN90..	175	500	284
	DN100..	198	575	359
JRTK..99R59	DN63..	120	403	192
	DN71..	135	432	221
	DN80..	156	483	272
	DN90..	175	495	284
	DN100..	198	570	359
	DN112M	221	603	392
JRTK..109R79	DN63..	120	433	186
	DN71..	135	461	214
	DN80..	156	512	265
	DN90..	175	524	277

		AC	K	KM
JRTK..109R79	DN100..	198	599	352
	DN112M	221	628	383
	DN132S	221	628	383
	DN132M	263	708	463
	DN160..	314	755	508
JRTK..129R89	DN80..	156	540	260
	DN90..	175	552	272
	DN100..	198	617	347
	DN112M	221	656	378
	DN132S	221	656	378
	DN132M	263	736	458
	DN160..	314	783	503
K..159R99 K169R99 KH169R99 K189R99 KH189R99	DN90..	175	592	267
	DN100..	198	667	342
	DN112M	221	696	373
	DN132S	221	696	373
	DN132M	263	776	453
	DN160..	314	823	498
	DN180M	355	944	119
	DN180L	355	992	667
K..159R109 K169R109 KH169R109 K189R109 KH189R109	DN90L	175	702	320
	DN100..	198	718	336
	DN112M	221	747	367
	DN132S	221	747	367
	DN132M	263	827	447
	DN160..	314	874	492
	DN180M	355	995	613
	DN180L	355	1043	661
	DN200L	397	1056	674

Notes:The dimension of motor in the above table is only for reference .If you have special require, pls consult us.

9. JRTS Helical Worm Gearmotor

1. Mounting Options

The following types of helical-worm gearmotor can be supplied.

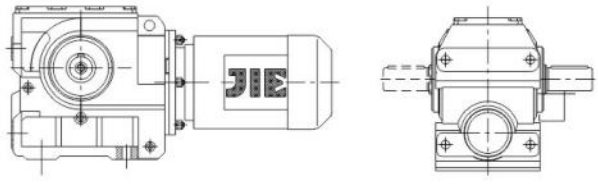

JRTS..D..
Foot-mounted

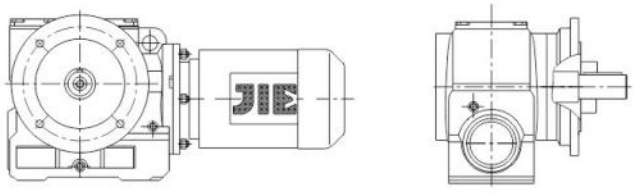

JRTSF..D..
flange-mounted version.

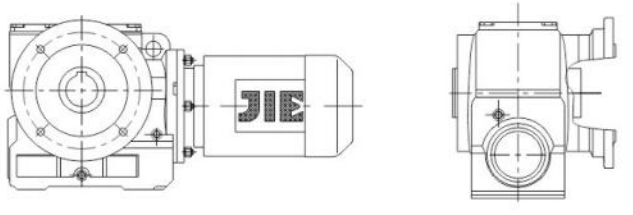

JRTSAF..D..
B5 flange-mounted version with hollow shaft.

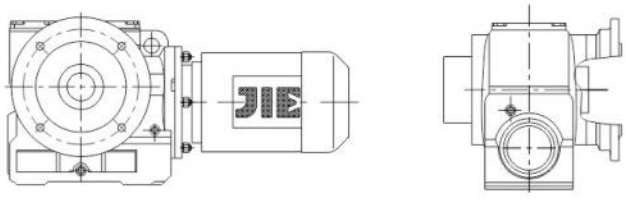

JRTSHF..D..
B5 flange-mounted version with hollow shaft and shrink disk.

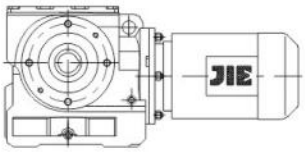

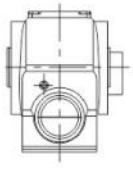

JRTSA..D..
hollow shaft.

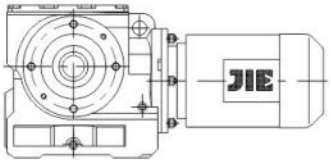

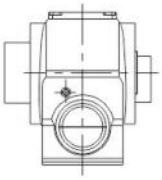

JRTSH..D..
hollow shaft and shrink disk.



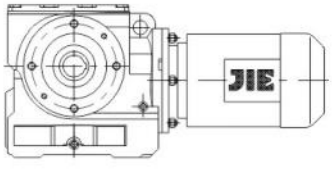

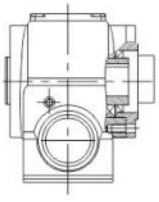

JRTSAZ..D..
B14 flange-mounted version with hollow shaft.

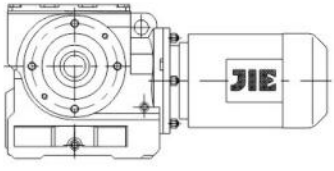

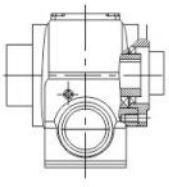

JRTSHZ..D..
B14 flange-mounted version with hollow shaft and shrink disk.

2. JRTS Helical Worm Gearmotor Model Description

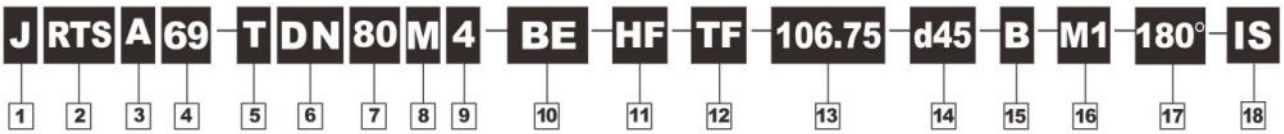

1 Enterprise Code

J- JIE Drive

2 Product Code

RTS-Helical-Worm Geared Motor

3 Unit Model

No Code- Foot-mounted
F- Flange-mounted
A- Hollow Shaft-mounted
AF- Flange-mounted with Hollow Shaft

4 Gear Unit Size

69- Gearmotor Size 69

5 Torque Arm

No Code- No Torque Arm
T- Torque Arm

6 Electric Motor

D– Three Phase Asychronous Motor(IP 54)
DU/DN – Energy efficiency rating class 2/class 3
YB– Flame–proof Three Phase Asychronous Motor
YGP– Table Roller Three Phase Asychronous Motor
YZP– Metallurgy Hoist Froquency Variable Motor
YD– Multi Speed Three Phase Motor

7 Frame Size

80– Motor Center Height 80mm

8 Stator Length

S、M、L

9 Number of Poles

4-4P

10 Brake

No Code- No Brakes
BE- Brakes

11 Brake Release

No Code- No brake release
HF- Screw release(lock in the brake release position) Brake release
HR- Handle release(automatic braking position)

12 Thermal Protection

No Code- No Thermistor
TF- Thermistor Sensor
TF- Thermistor protection (PTC thermistor)
TH- Thermostat protection (Bimetal switch)

13 Ratio

108.03- Ratio 108.03

14 Hollow shaft diameter

d45- Hollow shaft diamerter is 45

15 Position of the OutputShaft

A- Shaft with A
B- Shaft with B
AB- Shaft with A+B

16 Mounting Position

M1- Mounting Position M1

17 Terminal Box Position

No Code- Terminal Box Position is 0°
180° - Terminal Box Position is 180°

18 16 Inch Symbol

IS- Inch size

3. Type of Combination

The below is combination table between gear box and electromotor in each list the ratio range.

Motor power hp / Type	Stages	0.18~0.50	0.75~1	1.5~2	3~4	5	7.5	10
JRTS/SF/SA/SAF39	2	6.80-18.24 19.89-51.30 55.93-157.43	6.80-15.53 19.13 22.50-43.68 53.83 63.33-122.94	6.80-13.39 19.13 22.50-37.66 53.83 63.33-106.00				
JRTS/SF/SA/SAF49	2	7.28-17.62 20.33-54.59 63.80-201.00	7.28-17.62 20.33-54.59 67.20 71.75-158.12	7.28-19.54 23.20-47.32 56.61 67.20 71.75-137.05	7.28-14.24 19.54 23.20-38.23 56.61 67.20 71.75-110.73			
JRTS/SF/SA/SAF59	2	7.28-17.62 20.33-54.59 63.80-201.00	7.28-17.62 20.33-54.59 67.20 71.75-158.12	7.28-19.54 23.20-47.32 56.61 67.20 71.75-137.05	7.28-14.24 19.54 23.20-38.23 56.61 67.20 71.75-110.73			
JRTS/SF/SA/SAF69	2	11.03-17.28 20.37-23.22 24.44 29.63-54.70 62.35-65.63 75.06 85.83-217.41	8.69-17.28 20.37-23.22 24.44-54.70 62.35-65.63 75.06 85.83-217.41	7.56-17.28 20.37-23.22 24.44-54.70 62.35-65.63 78.00-190.1	7.56-17.28 20.37 23.33 26.93-54.70 67.57 78.00-158.45	7.56-20.30 23.33 26.93-46.40 58.80 67.57 78.00-134.40	7.56-13.73 20.30 23.33 26.93-36.85 58.80 67.57 78.00-106.75	7.56-13.73 20.30 23.33 26.93-36.85 58.80 67.57 78.00-106.75
JRTS/SF/SA/SAF79	2	15.28-18.42 20.99 22.89 35.94-53.87 63.03 71.33-75.09 107.83-256.47	12.07-18.42 20.99 22.89 28.41-53.87 63.03 71.33-75.09 85.22-256.47	8.06-18.42 20.99 22.89-75.09 85.22-225.26	8.06-18.42 20.99 22.89-66.67 75.20-189.09	8.06-18.42 20.99 22.89-56.92 66.67 75.20-161.60	8.06-18.97 22.22 25.07-43.33 56.92 66.67 75.20-130.00	8.06-18.97 22.22 25.07-43.33 56.92 66.67 75.20-130.00
JRTS/SF/SA/SAF89	2		17.49-19.70 21.43 25.50 39.10-57.00 64.27-70.43 81.76 91.20 123.48-288.00	12.21-19.70 21.43 25.50-57.00 64.27-70.43 81.76-288.00	9.07-19.70 21.43 25.50-57.00 64.27-86.15 99.26-258.18	9.07-19.70 21.43 25.50-57.00 64.27-77.14 86.15 99.26-222.40	7.88-19.70 21.43 25.50-64.00 77.14 86.15 99.26-180.00	
JRTS/SF/SA/SAF99	2		23.59 26.39 49.87-60.59 71.43 80.85 161.74-286.40	17.05-23.59 26.39 36.05-60.59 71.43 80.85 116.92-286.40	13.07-23.59 26.39 32.60-60.59 71.43 80.85-286.40	13.07-23.59 26.39 32.60-60.59 71.43 80.85-286.40	8.26-23.59 26.39 32.60-78.26 89.60-231.67	8.26-23.59 26.39 32.60-78.26 89.60-231.67

Motor power hp / Type	Stages	12.3	15	20	25~30			
JRTS/SF/SA/SAF79	2	8.06-13.76 18.97 22.22 25.07-32.38 56.92 66.67 75.20-97.14	8.06-13.76 18.97 22.22 25.07-32.38 56.92 66.67 75.20-97.14					
JRTS/SF/SA/SAF89	2	7.88-20.27 24.43 27.28-44.03 64.00 77.14 86.15 99.26-139.05	7.88-20.27 24.43 27.28-44.03 64.00 77.14 86.15 99.26-139.05	7.88-20.27 24.43 27.28-44.03 64.00 77.14 86.15 99.26-139.05	7.88-15.64 20.27 24.43 27.28-34.96 64.00 77.14 86.15 99.26-110.40			
JRTS/SF/SA/SAF99	2	8.26-23.59 26.39 32.60-55.79 65.45 78.26 89.60-180.95	8.26-23.59 26.39 32.60-55.79 65.45 78.26 89.60-180.95	8.26-23.59 26.39 32.60-55.79 65.45 78.26 89.60-180.95	8.26-21.23 24.13 27.63-44.89 65.45 78.26 89.60-145.60			

4. Ratio and max nominal torque

JRTS39-59 n_e=1700r/min

JRTS39			810 lbf·in	
i	n_a [r/min]	M_{amax} lbf·in	F_{Ra} lbf	AD
157.43	11	800	675	
144.40	12	795	675	
122.94	14	765	675	
106.00	16	760	675	
98.80	17	750	675	
86.36	20	725	675	AD_1
80.96	21	725	675	
71.44	24	705	675	
63.33	27	695	675	
55.93	30	715	675	
53.83	32	670	675	AD_2
51.30	33	705	675	
43.68	39	690	675	
37.66	45	670	645	
35.10	48	660	630	
30.68	55	645	600	AD_1
28.76	59	645	580	
25.38	67	625	555	
22.50	76	615	530	
19.89	85	440	515	
19.13	89	600	495	AD_2
18.24	93	430	500	AD_1
15.53	109	420	470	
13.39	127	415	440	
12.48	136	405	430	
10.91	156	395	410	
10.23	166	395	395	
9.02	188	380	380	
8.00	212	380	360	AD_2
6.80	250	360	340	

JRTS49			1500 lbf·in	
i	n_a [r/min]	M_{amax} lbf·in	F_{Ra} lbf	AD
201.00	8.5	1500	1200	
184.80	9.2	1480	1200	
158.12	11	1480	1200	
137.05	12	1470	1200	
128.10	13	1470	1200	
110.73	15	1470	1200	AD_1
94.08	18	1470	1200	
84.00	20	1470	1200	
71.75	24	1470	1200	
69.39	24	1370	1180	
67.20	25	1450	1190	
63.80	27	1370	1140	
56.61	30	1340	1120	AD_2
54.59	31	1370	1070	
47.32	36	1370	1000	AD_1
44.22	38	1370	970	
38.23	44	1370	910	
32.48	52	1370	850	
29.00	59	1360	810	
24.77	69	1280	770	
23.20	73	1250	755	
20.33	84	970	690	
19.54	87	1080	735	
17.62	96	960	650	
16.47	103	960	630	
14.24	119	960	585	AD_2
12.10	140	960	540	
10.80	157	950	510	
9.23	184	920	480	
8.64	197	880	475	
7.28	234	760	475	

JRTS59			2610 lbf·in	
i	n_a [r/min]	M_{amax} lbf·in	F_{Ra} lbf	AD
201.00	8.5	2610	1600	
184.80	9.2	2610	1600	
158.12	11	2610	1600	
137.05	12	2610	1600	AD_1
128.10	13	2610	1600	
110.73	15	2610	1600	
94.08	18	2650	1590	
84.00	20	2520	1620	
71.75	24	2430	1640	
69.39	24	2160	1690	
67.20	25	2300	1670	
63.80	27	2160	1690	
56.61	30	1990	1720	
54.59	31	2160	1690	
47.32	36	2160	1660	
44.22	38	2160	1610	
38.23	44	2160	1520	
32.48	52	2160	1420	
29.00	59	2160	1350	
24.77	69	1940	1300	
23.20	73	1850	1280	
20.33	84	1480	1180	AD_2
19.54	87	1610	1240	
17.62	96	1480	1100	
16.47	103	1480	1070	
14.24	119	1490	1000	
12.10	140	1490	930	
10.80	157	1490	880	
9.23	184	1310	860	
8.64	197	1240	850	
7.28	234	1070	830	

JRTS69-89 n_e=1700 r/min

JRTS69			4600 lbf·in	
i	n_a [r/min]	M_{amax} lbf·in	F_{Ra} lbf	AD
217.41	7.8	4600	1950	
190.11	8.9	4600	1950	
180.60	9.4	4600	1950	
158.45	11	4600	1950	
134.40	13	4600	1950	
121.33	14	4600	1950	AD_2
106.75	16	4600	1950	
100.80	17	4600	1950	
85.83	20	4600	1950	
78.00	22	4510	1970	
75.06	23	4240	2030	
67.57	25	4370	2000	
65.63	26	4240	1940	
62.35	27	4240	1890	
58.80	29	4070	1950	AD_3
54.70	31	4240	1790	
46.40	37	4240	1660	
41.89	41	4240	1580	
36.85	46	4240	1490	
34.80	49	4240	1450	
29.63	57	4240	1340	AD_2
26.93	63	4020	1310	
24.44	70	3000	1230	
23.33	73	3580	1290	
23.22	73	3000	1200	
20.37	83	3000	1120	
20.30	84	3180	1270	AD_3
17.28	98	3000	1030	
15.60	109	3000	960	AD_2
13.73	124	3000	840	
12.96	131	3000	795	
11.03	154	3000	655	
10.03	169	2780	700	AD_3
8.69	196	2470	755	
7.56	225	2210	795	

JRTS79			11200 lbf·in	
i	n_a [r/min]	M_{amax} lbf·in	F_{Ra} lbf	AD
256.47	6.6	11200	2630	
225.26	7.5	11200	2630	
214.00	7.9	11200	2630	
189.09	9.0	10900	2690	
161.60	11	10700	2730	
148.15	11	10600	2770	
130.00	13	10300	2830	
123.20	14	10100	2860	
107.83	16	9820	2930	
97.14	18	9640	2950	AD_2
85.22	20	9290	2820	
75.20	23	8930	2700	
75.09	23	9730	2430	
71.33	24	9730	2370	
66.67	25	8580	2590	
63.03	27	9730	2220	
56.92	30	8140	2460	
53.87	32	9730	2050	
49.38	34	9730	1960	
43.33	39	9730	1820	
41.07	41	9730	1770	
35.94	47	9370	1680	
32.38	53	9200	1610	
28.41	60	8750	1550	
25.07	68	8490	1470	
22.89	74	6230	1050	
22.22	77	8140	1420	
20.99	81	6230	930	AD_3
18.97	90	7600	1360	
18.42	92	6280	735	
17.45	97	6280	665	
15.28	111	6370	455	
13.76	124	6370	325	
12.07	141	6410	152	
10.65	160	6410	11	
9.44	180	5790	161	AD_4
8.06	211	5080	325	

JRTS89			20100 lbf·in	
i	n_a [r/min]	M_{amax} lbf·in	F_{Ra} lbf	AD
288.00	5.9	20100	6280	
258.18	6.6	19900	6290	
222.40	7.6	19500	6310	
202.96	8.4	19300	6320	
180.00	9.4	18800	6340	
151.30	11	18200	6370	
139.05	12	17800	6380	
123.48	14	17300	6410	AD_2
110.40	15	16800	6430	
99.26	17	16200	6450	
91.20	19	13400	6540	
86.15	20	15600	6470	
81.76	21	14100	6520	
77.14	22	15000	6500	
70.43	24	14100	6520	
64.27	26	14100	6520	
64.00	27	13900	6530	AD_3
57.00	30	14100	6520	AD_2
47.91	35	14100	6360	
44.03	39	14100	6160	
39.10	43	14100	5900	AD_3
34.96	49	14100	5660	
31.43	54	14100	5440	
27.28	62	14100	5160	
25.50	67	10900	4870	
24.43	70	14100	4950	
21.43	79	10900	4550	
20.27	84	12500	4760	
19.70	86	10900	4400	
17.49	97	10900	4190	
15.64	109	10900	4000	AD_4
14.06	121	10900	3830	
12.21	139	10900	3480	
10.93	156	9990	3580	
9.07	187	8400	3530	
7.88	216	7340	3490	



JRTS99,JRTS39R19,JRTS49R19 n_e=1700 r/min

JRTS99				35300 lbf·in
i	n_a [r/min]	M_{amax} lbf·in	F_{Ra} lbf	AD
286.40	5.9	35300	7460	
262.22	6.5	35300	7460	
231.67	7.3	35000	7480	
196.52	8.7	33900	7530	
180.95	9.4	33300	7560	
161.74	11	32200	7610	AD3
145.60	12	31400	7650	
131.85	13	30400	7700	
116.92	15	29500	7740	
105.71	16	28400	7780	
89.60	19	26700	7850	
80.85	21	28900	7760	
78.26	22	25300	7900	
71.43	24	29100	7750	AD4
65.45	26	23400	7960	AD3
60.59	28	29100	7750	
55.79	30	29100	7740	
49.87	34	29100	7410	
44.89	38	29100	7110	AD4
40.65	42	28500	6880	
36.05	47	27500	6650	
32.60	52	26300	6480	
27.63	62	24800	6180	AD5
26.39	64	23000	5210	AD4
24.13	70	23600	5960	
23.59	72	23000	4790	
21.23	80	22700	4510	
19.23	88	22100	4370	
17.05	100	21200	4260	AD5
15.42	110	20300	4220	
13.07	130	19200	4080	
11.41	149	17600	4170	
9.55	178	14700	4230	
8.26	206	12700	4220	

JRTS39R19				810 lbf·in	
i	n_a [r/min]	Stage S39	Stage R19	M_{amax} lbf·in	F_{Ra} lbf
10037	0.17	2	3	810	675
8654	0.20	2	3	810	675
8066	0.21	2	3	810	675
7051	0.24	2	3	810	675
6079	0.28	2	3	810	675
5431	0.31	2	3	810	675
4747	0.36	2	3	810	675
4155	0.41	2	3	810	675
3632	0.47	2	3	810	675
2866	0.59	2	3	810	675
2471	0.69	2	3	810	675
2160	0.79	2	3	810	675
1887	0.90	2	3	810	675
1665	1.0	2	3	810	675
1456	1.2	2	3	810	675
1271	1.3	2	3	810	675
1121	1.5	2	3	810	675
994	1.7	2	3	810	675
869	2.0	2	3	810	675
774	2.2	2	2	810	675
666	2.6	2	2	810	675
596	2.9	2	2	810	675
521	3.3	2	2	810	675
456	3.7	2	2	810	675
398	4.3	2	2	810	675
351	4.8	2	2	810	675
303	5.6	2	2	810	675
265	6.4	2	2	810	675
232	7.3	2	2	810	675
202	8.4	2	2	810	675
179	9.5	2	2	810	675
158	11	2	2	810	675
144	12	2	2	810	675
118	14	2	2	810	675
110	15	2	2	810	675

JRTS49R19				1630 lbf·in	
i	n_a [r/min]	Stage S49	Stage R19	M_{amax} lbf·in	F_{Ra} lbf
12909	0.13	2	3	1630	1180
11189	0.15	2	3	1630	1180
10374	0.16	2	3	1630	1180
8992	0.19	2	3	1630	1180
7860	0.22	2	3	1630	1180
6887	0.25	2	3	1630	1180
6055	0.28	2	3	1630	1180
5292	0.32	2	3	1630	1180
4637	0.37	2	3	1630	1180
4092	0.42	2	3	1630	1180
3582	0.47	2	3	1630	1170
3131	0.54	2	3	1630	1170
2714	0.63	2	3	1630	1170
2412	0.70	2	3	1630	1170
2131	0.80	2	3	1630	1170
1863	0.91	2	3	1630	1170
1663	1.0	2	3	1630	1170
1435	1.2	2	3	1630	1170
1254	1.4	2	3	1630	1170
1120	1.5	2	3	1630	1170
1083	1.6	2	3	1630	1170
956	1.8	2	3	1630	1170
965	1.8	2	3	1610	1170
865	2.0	2	2	1630	1170
750	2.3	2	2	1630	1170
655	2.6	2	2	1630	1170
574	3.0	2	2	1630	1170
506	3.4	2	2	1630	1170
438	3.9	2	2	1630	1170
388	4.4	2	2	1630	1170
336	5.1	2	2	1630	1170
294	5.8	2	2	1630	1170
257	6.6	2	2	1630	1170
229	7.4	2	2	1630	1170
200	8.5	2	2	1630	1170
187	9.1	2	2	1630	1170
165	10	2	2	1630	1170
148	11	2	2	1630	1170
131	13	2	2	1630	1170

JRTS59R19,JRTS69/79R39 n_e=1700 r/min

JRTS59R19				2910 lbf·in	
i	n_a [r/min]	Stage S59	Stage R19	M_{amax} lbf·in	F_{Ra} lbf
12909	0.13	2	3	2910	1530
11189	0.15	2	3	2910	1530
10374	0.16	2	3	2910	1530
8992	0.19	2	3	2910	1530
7860	0.22	2	3	2910	1530
6887	0.25	2	3	2910	1530
6055	0.28	2	3	2910	1530
5292	0.32	2	3	2910	1530
4637	0.37	2	3	2910	1530
4092	0.42	2	3	2910	1530
3628	0.47	2	3	2910	1530
3131	0.54	2	3	2650	1590
2714	0.63	2	3	2650	1590
2412	0.70	2	3	2650	1590
2131	0.80	2	3	2650	1590
1863	0.91	2	3	2650	1590
1663	1.0	2	3	2650	1590
1435	1.2	2	3	2650	1590
1254	1.4	2	3	2650	1590
1083	1.6	2	3	2650	1590
965	1.8	2	2	2650	1590
865	2.0	2	2	2650	1590
750	2.3	2	2	2650	1590
655	2.6	2	2	2650	1590
574	3.0	2	2	2650	1590
506	3.4	2	2	2650	1590
438	3.9	2	2	2650	1590
388	4.4	2	2	2650	1590
336	5.1	2	2	2650	1590
294	5.8	2	2	2650	1590
269	6.3	2	2	2650	1590
229	7.4	2	2	2650	1590
204	8.3	2	2	2650	1590
187	9.1	2	2	2650	1590
165	10	2	2	2650	1590
131	13	2	2	2650	1590

JRTS69R39				5040 lbf·in	
i	n_a [r/min]	Stage S69	Stage R39	M_{amax} lbf·in	F_{Ra} lbf
21362	0.08	2	3	5040	1840
19594	0.09	2	3	5040	1840
18120	0.09	2	3	5040	1840
16682	0.10	2	3	5040	1840
14383	0.12	2	3	5040	1840
12774	0.13	2	3	5040	1840
11013	0.15	2	3	5040	1840
9694	0.18	2	3	5040	1840
8529	0.20	2	3	5040	1840
7455	0.23	2	3	5040	1840
6531	0.26	2	3	5040	1840
5759	0.30	2	3	5040	1840
4965	0.34	2	3	5040	1840
4410	0.39	2	3	5040	1840
3880	0.44	2	3	5040	1840
3432	0.50	2	3	5040	1840
2944	0.58	2	3	5040	1840
2630	0.65	2	3	5040	1840
2279	0.75	2	3	5040	1840
2014	0.84	2	3	5040	1840
1772	0.96	2	3	5040	1840
1559	1.1	2	3	5040	1840
1363	1.2	2	3	5040	1840
1194	1.4	2	3	5040	1840
1045	1.6	2	3	5040	1840
914	1.9	2	3	5040	1840
809	2.1	2	2	5040	1840
712	2.4	2	2	5040	1840
615	2.8	2	2	5040	1840
543	3.1	2	2	5040	1840
469	3.6	2	2	5040	1840
424	4.0	2	2	5040	1840
365	4.7	2	2	5040	1840
319	5.3	2	2	5040	1840
281	6.0	2	2	5040	1840
246	6.9	2	2	5040	1840
221	7.7	2	2	5040	1840
198	8.6	2	2	5040	1840
168	10	2	2	5040	1840
156	11	2	2	5040	1840

JRTS79R39				11200 lbf·in	
i	n_a [r/min]	Stage S79	Stage R39	M_{amax} lbf·in	F_{Ra} lbf
25493	0.07	2	3	11200	2630
21787	0.08	2	3	11200	2630
19907	0.09	2	3	11200	2630
17013	0.10	2	3	11200	2630
14668	0.12	2	3	11200	2630
13110	0.13	2	3	11200	2630
11569	0.15	2	3	11200	2630
9887	0.17	2	3	11200	2630
8817	0.19	2	3	11200	2630
7735	0.22	2	3	11200	2630
6735	0.25	2	3	11200	2630
5943	0.29	2	3	11200	2630
5214	0.33	2	3	11200	2630
4618	0.37	2	3	11200	2630
3992	0.43	2	3	11200	2630
3540	0.48	2	3	11200	2630
3098	0.55	2	3	11200	2630
2753	0.62	2	3	10900	2690
2374	0.72	2	3	10900	2690
2083	0.82	2	3	10900	2690
1813	0.94	2	3	10900	2690
1745	0.97	2	3	10900	2690
1600	1.1	2	3	10900	2690
1404	1.2	2	3	10900	2690
1245	1.4	2	3	10900	2690
1100	1.5	2	2	10900	2690
954	1.8	2	2	10900	2690
837	2.0	2	2	10900	2690
714	2.4	2	2	10900	2690
637	2.7	2	2	10900	2690
574	3.0	2	2	10900	2690
499	3.4	2	2	10900	2690
438	3.9	2	2	10900	2690
389	4.4	2	2	10900	2690
327	5.2	2	2	10900	2690
289	5.9	2	2	10900	2690
250	6.8	2	2	10900	2690
219	7.8	2	2	10900	2690

JRTS89/99R59, n_e=1700 r/min

JRTS89R59					22100 lbf·in
i	n_a [r/min]	Stage S89	Stage R59	M_{amax} lbf·in	F_{Ra} lbf
25987	0.07	2	3	22100	6180
23940	0.07	2	3	22100	6180
20568	0.08	2	3	22100	6180
18265	0.09	2	3	22100	6180
16774	0.10	2	3	22100	6180
14820	0.11	2	3	22100	6180
13160	0.13	2	3	22100	6180
11200	0.15	2	3	22100	6180
9904	0.17	2	3	22100	6180
8549	0.20	2	3	22100	6180
7643	0.22	2	3	22100	6180
6706	0.25	2	3	22100	6180
5875	0.29	2	3	22100	6180
5187	0.33	2	3	22100	6180
4606	0.37	2	3	22100	6180
3872	0.44	2	3	22100	6180
3475	0.49	2	2	22100	6180
2905	0.59	2	2	22100	6180
2586	0.66	2	2	22100	6180
2335	0.73	2	2	22100	6180
2054	0.83	2	2	22100	6180
1824	0.93	2	2	22100	6180
1631	1.0	2	2	22100	6180
1332	1.3	2	2	22100	6180
1191	1.4	2	2	22100	6180
1032	1.6	2	2	22100	6180
930	1.8	2	2	22100	6180
831	2.0	2	2	22100	6180
719	2.4	2	2	22100	6180
624	2.7	2	2	22100	6180
558	3.0	2	2	22100	6180
485	3.5	2	2	22100	6180
435	3.9	2	2	21600	6200
378	4.5	2	2	21600	6200
323	5.3	2	2	21200	6230
281	6.0	2	2	21200	6230
255	6.7	2	2	17500	6390
222	7.7	2	2	17500	6390
205	8.3	2	2	17500	6390

JRTS99R59					37100 lbf·in
i	n_a [r/min]	Stage S99	Stage R59	M_{amax} lbf·in	F_{Ra} lbf
33818	0.05	2	3	37100	7360
31154	0.05	2	3	37100	7360
27641	0.06	2	3	37100	7360
24641	0.07	2	3	37100	7360
21537	0.08	2	3	37100	7360
18749	0.09	2	3	37100	7360
16233	0.10	2	3	37100	7360
14576	0.12	2	3	37100	7360
12752	0.13	2	3	37100	7360
11267	0.15	2	3	37100	7360
10078	0.17	2	3	37100	7360
8608	0.20	2	3	37100	7360
7554	0.23	2	3	37100	7360
6640	0.26	2	3	37100	7030
5780	0.29	2	3	37100	7030
4937	0.34	2	3	37100	7030
4444	0.38	2	3	37100	7030
4017	0.42	2	3	37100	7030
3453	0.49	2	3	37100	7030
3108	0.55	2	3	37100	7030
2654	0.64	2	3	37100	7030
2329	0.73	2	3	37100	7030
2081	0.82	2	3	37100	7030
1860	0.91	2	3	37100	7030
1574	1.1	2	3	37100	7030
1394	1.2	2	2	37100	7030
1223	1.4	2	2	37100	7030
1070	1.6	2	2	37100	7030
928	1.8	2	2	37100	7030
824	2.1	2	2	37100	7030
714	2.4	2	2	37100	7360
626	2.7	2	2	37100	7050
538	3.2	2	2	37100	7050
484	3.5	2	2	37100	7060
420	4.0	2	2	37100	7070
376	4.5	2	2	37100	7070
327	5.2	2	2	37100	7080
287	5.9	2	2	37100	7090
252	6.7	2	2	37100	7100
219	7.8	2	2	37100	7100
205	8.3	2	2	37100	7110

5. Selection Tbale

Selection table for geared motors

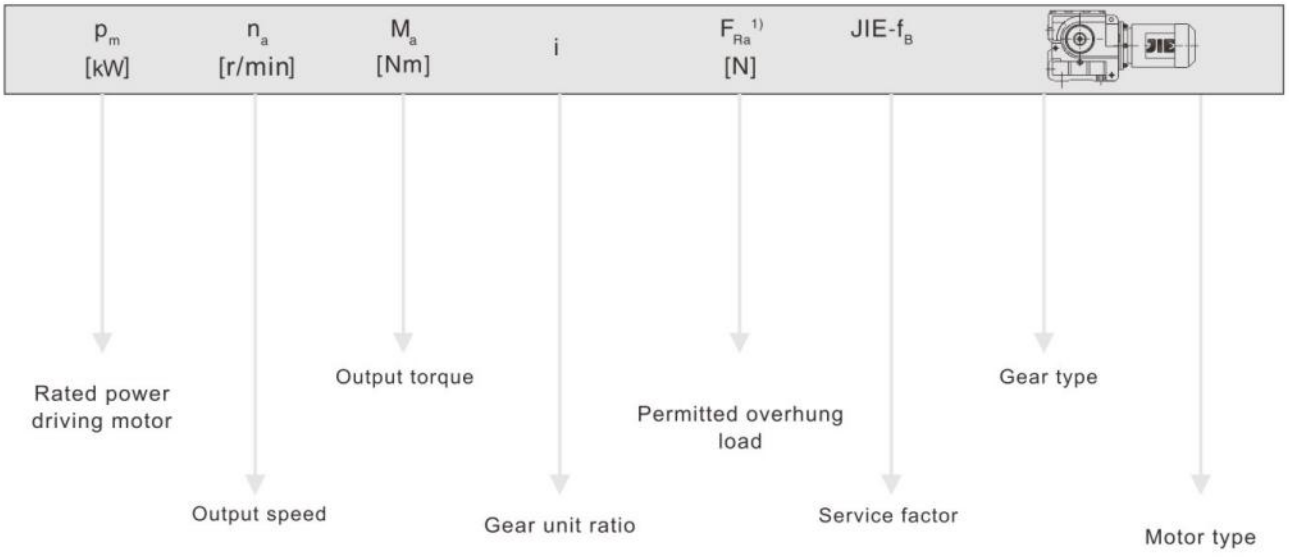

For particularly low output speeds

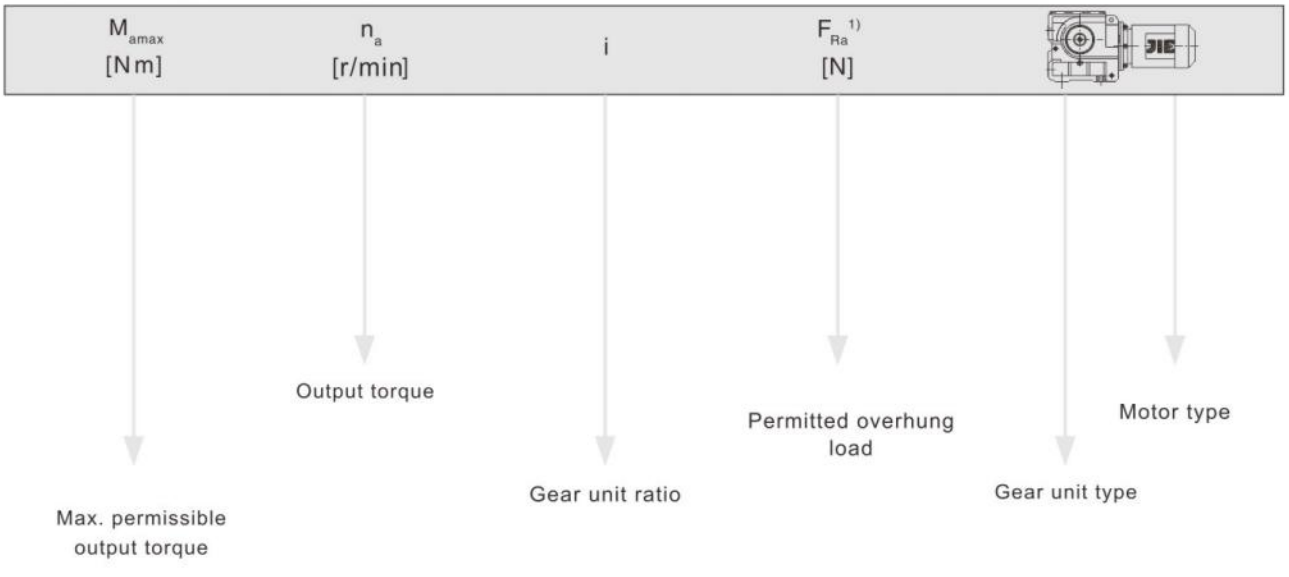

Cuttine

★EExe motor is optional。

1)Overhung load specified for foot-mounted gear unit with solid shaft

Notice:

In drives for particularly low output speeds(multi-stage geared motors),the motor power must be limited according to the maximum permitted output torque of the gear unit.



Output speed n_a [r/min]	Output torque T_a lbf·in	Ratio i	Permitted overhung load F_{Ra} [1] lbf	Service factor f_B	Model
0.16HP					
0.15	32800	11267	7590	1.15	JRTS99R59DN63S4
0.17	30300	10078	7700	1.20	JRTSF99R59DN63S4
0.20	24800	8608	7920	1.50	JRTSA99R59DN63S4
0.22	22000	7554	8010	1.70	JRTSAF99R59DN63S4
0.25	18400	6706	6360	1.20	
0.29	16500	5875	6440	1.35	JRTS89R59DN63S4
0.32	13400	5187	6550	1.65	JRTSF89R59DN63S4
0.36	11900	4606	6590	1.85	JRTSA89R59DN63S4
0.43	9860	3872	6650	2.2	JRTSAF89R59DN63S4
0.47	9490	3540	2990	1.20	
0.54	8300	3098	3190	1.35	
0.71	9330	2374	3020	1.20	
0.81	8190	2083	3200	1.35	JRTS79R39DN63S4
0.93	6890	1813	3370	1.60	JRTSF79R39DN63S4
0.96	6510	1745	3410	1.70	JRTSA79R39DN63S4
1.1	5970	1600	3470	1.85	JRTSAF79R39DN63S4
1.2	5240	1404	3540	2.1	
1.4	4560	1245	3590	2.4	
1.4	4080	1194	2060	1.25	JRTS69R39DN63S4
1.6	3730	1045	2120	1.35	JRTSF69R39DN63S4
1.8	3200	914	2200	1.55	JRTSA69R39DN63S4
2.1	2940	809	2240	1.70	JRTSAF69R39DN63S4
2.4	2590	712	2280	1.95	
2.7	2120	615	2330	2.4	JRTS69R39DN63S4
3.1	1920	543	2350	2.6	JRTSF69R39DN63S4
3.6	1550	469	2370	3.2	JRTSA69R39DN63S4
4.0	1410	424	2380	3.6	JRTSAF69R39DN63S4
4.6	1320	365	2390	3.8	
2.6	2300	655	1660	1.15	
2.9	2000	574	1720	1.30	
3.3	1740	506	1750	1.50	JRTS59R19DN63S4
3.8	1500	438	1780	1.75	JRTSF59R19DN63S4
4.3	1310	388	1800	2.0	JRTSA59R19DN63S4
5.0	1190	336	1820	2.2	JRTSAF59R19DN63S4
5.7	1010	294	1830	2.6	
6.2	990	269	1830	2.7	
3.8	1500	438	1190	1.10	
4.3	1310	388	1210	1.25	
5.0	1180	336	1230	1.40	
5.7	1000	294	1250	1.65	JRTS49R19DN63S4
6.5	690	257	1290	2.4	JRTSF49R19DN63S4
7.3	830	229	1270	1.95	JRTSA49R19DN63S4
8.4	725	200	1280	2.2	JRTSAF49R19DN63S4
9.0	680	187	1290	2.4	
8.3	730	202	675	1.10	
9.4	650	179	675	1.25	
11	580	158	675	1.40	JRTS39R19DN63S4
12	535	144	675	1.50	JRTSF39R19DN63S4
14	435	118	675	1.85	JRTSA39R19DN63S4
15	405	110	675	2.0	JRTSAF39R19DN63S4
5.5	1050	201.00	1830	2.5	
6.0	980	184.80	1830	2.6	JRTS59DN63M6
7.0	850	158.12	1840	3.0	JRTSF59DN63M6
8.0	755	137.02	1850	3.5	JRTSA59DN63M6
					JRTSAF59DN63M6

Output speed n_a [r/min]	Output torque T_a lbf·in	Ratio i	Permitted overhung load F_{Ra} [1] lbf	Service factor f_B	Model
0.16HP					
5.5	1020	201.00	1260	1.50	
6.0	940	184.80	1260	1.60	JRTS49DN63M6
7.0	820	158.12	1280	1.85	JRTSF49DN63M6
8.0	730	137.05	1290	2.1	JRTSA49DN63M6
8.6	690	128.10	1290	2.2	JRTSAF49DN63M6
8.4	705	201.00	201.00	2.1	
9.1	655	184.80	184.80	2.3	
11	570	158.12	158.12	2.6	JRTS49DN63S4
12	505	137.05	137.05	2.9	JRTSF49DN63S4
13	475	128.10	128.10	3.1	JRTSA49DN63S4
15	415	110.73	110.73	3.5	JRTSAF49DN63S4
7.6	730	144.40	144.40	1.10	
8.9	635	122.94	122.94	1.30	
10	560	106.00	106.00	1.45	JRTS39DN63M6
11	525	98.80	98.80	1.55	JRTSF39DN63M6
13	465	86.36	86.36	1.70	JRTSA39DN63M6
11	545	157.43	157.43	1.45	JRTSAF39DN63M6
12	505	144.40	144.40	1.55	
14	440	122.94	122.94	1.75	
16	385	106.00	106.00	1.95	
17	360	98.80	98.80	2.1	
19	320	86.36	86.36	2.2	
21	305	80.96	80.96	2.4	
24	270	71.44	71.44	2.6	
27	245	63.33	63.33	2.8	JRTS39DN63S4
30	255	55.93	55.93	2.8	JRTSF39DN63S4
33	235	51.30	51.30	3.0	JRTSA39DN63S4
38	205	43.68	43.68	3.4	JRTSAF39DN63S4
45	180	37.66	37.66	3.8	
48	168	35.10	35.10	4.0	
55	148	30.68	30.68	4.4	
58	139	28.76	28.76	4.6	
66	124	25.38	25.38	5.1	
75	111	22.50	22.50	5.6	
84	104	19.89	19.89	4.2	
92	96	18.24	18.24	4.5	
108	82	15.53	15.53	5.2	
0.25HP					
0.37	20500	4606	6260	1.10	JRTS89R59DN63M4
0.44	17100	3872	6420	1.30	JRTSF89R59DN63M4
0.49	16800	3475	6430	1.30	JRTSA89R59DN63M4
0.59	14100	2905	6520	1.55	JRTSAF89R59DN63M4
0.66	12100	2586	6590	1.85	JRTS89R59DN63M4
0.73	10700	2335	6630	2.0	JRTSF89R59DN63M4
0.83	9270	2054	6660	2.4	JRTSA89R59DN63M4
0.93	8240	1824	6680	2.7	JRTSAF89R59DN63M4
1.0	7430	1631	6700	3.0	
1.2	8640	3140	3140	1.25	JRTS79R39DN63M4
1.4	7570	3290	3290	1.45	JRTSF79R39DN63M4
					JRTSA79R39DN63M4
					JRTSAF79R39DN63M4

Output speed n_a [r/min]	Output torque T_a lbf·in	Ratio i	Permitted overhung load F_{Ra} [1] lbf	Service factor f_B	Model
0.25HP					
1.6	7140	1100	3340	1.55	
1.8	6130	954	3450	1.80	JRTS79R39DN63M4
2.0	5380	837	3520	2.0	JRTSF79R39DN63M4
2.4	4440	714	3600	2.5	JRTSA79R39DN63M4
2.7	3920	637	3600	2.8	JRTSAF79R39DN63M4
3.0	3570	574	3600	3.1	
2.4	4190	712	2040	1.20	
2.8	3510	615	2160	1.45	JRTS69R39DN63M4
3.1	3140	543	2210	1.60	JRTSF69R39DN63M4
3.6	2610	469	2280	1.95	JRTSA69R39DN63M4
4.0	2370	424	2300	2.1	JRTSAF69R39DN63M4
4.7	2160	365	2330	2.3	
3.9	2460	438	1630	1.05	
4.4	2170	388	1690	1.20	
5.1	1940	336	1730	1.35	JRTS59R19DN63M4
5.8	1680	294	1760	1.60	JRTSF59R19DN63M4
6.3	1590	269	1770	1.65	JRTSA59R19DN63M4
7.4	1370	229	1800	1.95	JRTSAF59R19DN63M4
8.3	1230	204	1810	2.1	
9.1	1120	187	1820	2.4	
5.8	1650	294	1160	1.00	
6.6	1150	257	1240	1.40	
7.4	1350	229	1210	1.20	
8.5	1180	200	1230	1.40	JRTS49R19DN63M4
9.1	1100	187	1240	1.50	JRTSF49R19DN63M4
10	970	165	1250	1.65	JRTSA49R19DN63M4
12	880	148	1270	1.85	JRTSAF49R19DN63M4
13	775	131	1280	2.1	
4.9	1930	271.41	2340	2.5	JRTS69DN71S6
5.6	1710	190.11	2360	2.9	JRTSF69DN71S6
5.9	1640	180.60	2370	3.0	JRTSA69DN71S6
8.5	1130	201.00	1820	2.3	JRTSAF69DN71S6
9.2	1050	184.80	1830	2.5	JRTS59DN63M4
11	910	158.12	1840	2.9	JRTSF59DN63M4
12	800	137.05	1850	3.2	JRTSA59DN63M4
5.3	1690	201.00	1760	1.55	JRTSAF59DN63M4
5.8	1570	184.80	1780	1.65	JRTS59DN71S6
6.8	1370	158.12	1800	1.90	JRTSF59DN71S6
7.8	1210	137.05	1810	2.1	JRTSA59DN71S6
8.5	1090	201.00	1250	1.40	JRTSAF59DN71S6
9.2	1010	184.80	1260	1.45	
11	880	158.12	1270	1.70	
12	780	137.05	1280	1.90	
13	735	128.10	1290	2.0	JRTS49DN63M4
15	645	110.73	1290	2.3	JRTSF49DN63M4
18	560	94.08	1300	2.6	JRTSA49DN63M4
20	505	84.00	1310	2.9	JRTSAF49DN63M4
24	440	71.75	1310	3.4	
24	500	69.39	1300	2.7	
5.8	1520	184.80	1200	1.00	
6.8	1320	158.12	1220	1.15	JRTS49DN71S6
7.8	1170	137.05	1240	1.30	JRTSF49DN71S6
8.3	1100	128.10	1250	1.35	JRTSA49DN71S6
					JRTSAF49DN71S6

Output speed n_a [r/min]	Output torque T_a lbf·in	Ratio i	Permitted overhung load F_{Ra} [1] lbf	Service factor f_B	Model
0.25HP					
12	785	144.40	675	1.00	
14	680	122.94	675	1.15	
16	595	106.00	675	1.25	
17	560	98.80	675	1.35	
20	500	86.36	675	1.45	
21	470	80.96	675	1.55	
24	420	71.44	675	1.65	
27	380	63.33	675	1.85	
30	400	55.93	675	1.80	
33	370	51.30	675	1.90	
39	315	43.68	675	2.2	JRTS39DN63M4
45	275	37.66	675	2.4	JRTSF39DN63M4
48	260	35.10	675	2.5	JRTSA39DN63M4
55	225	30.68	675	2.8	JRTSAF39DN63M4
59	215	28.76	675	3.0	
67	192	25.38	675	3.3	
76	171	22.50	670	3.6	
85	161	19.89	630	2.7	
93	148	18.24	615	2.9	
109	127	15.53	590	3.3	
127	110	13.39	565	3.8	
136	103	12.48	555	4.0	
156	90	10.91	535	4.4	
166	85	10.23	525	4.7	
0.33HP					
0.59	19100	2905	6330	1.15	
0.66	16500	2586	6440	1.35	
0.73	14700	2335	6500	1.50	JRTS89R59DN71S4
0.83	12800	2054	6570	1.75	JRTSF89R59DN71S4
0.93	11300	1824	6610	1.95	JRTSA89R59DN71S4
1.0	10200	1631	6640	2.1	JRTSAF89R59DN71S4
1.8	6100	930	6720	3.6	
1.8	8250	954	3190	1.35	
2.0	7240	837	3330	1.50	
2.4	6030	714	3460	1.80	JRTS79R39DN71S4
2.7	5340	637	3530	2.0	JRTSF79R39DN71S4
3.0	4850	574	3570	2.3	JRTSA79R39DN71S4
3.4	4130	499	3600	2.6	JRTSAF79R39DN71S4
3.1	4250	543	2020	1.20	
3.6	3580	469	2150	1.40	
4.0	3250	424	2200	1.55	JRTS69R39DN71S4
4.7	2920	365	2240	1.70	JRTSF69R39DN71S4
5.3	2520	319	2290	2.0	JRTSA69R39DN71S4
6.1	2200	281	2320	2.3	JRTSAF69R39DN71S4
5.8	2280	294	1670	1.15	
6.3	2150	269	1690	1.25	
7.4	1840	229	1740	1.45	JRTS59R19DN71S4
8.3	1660	204	1770	1.60	JRTSF59R19DN71S4
9.1	1520	187	1780	1.75	JRTSA59R19DN71S4
10	1340	165	1800	1.95	JRTSAF59R19DN71S4
13	1070	131	1830	2.5	

Output speed n_a [r/min]	Output torque T_a lbf·in	Ratio i	Permitted overhung load F_{Ra} [1] lbf	Service factor f_B	Model
0.33HP					
5.1	2490	217.41	2290	1.95	JRTS69DN71M6 JRTSF69DN71M6 JRTSA69DN71M6 JRTSAF69DN71M6
5.8	2210	190.11	2320	2.2	
6.1	2110	180.60	2330	2.3	
6.9	1880	158.45	2350	2.6	
7.8	1690	217.41	2360	2.7	JRTS69DN71S4 JRTSF69DN71S4 JRTSA69DN71S4 JRTSAF69DN71S4
8.9	1500	190.11	2380	3.0	
9.4	1440	180.60	2380	3.2	
11	1280	158.45	2390	3.6	
13	1100	134.40	2400	4.2	
14	1000	121.33	2400	4.6	
16	890	106.75	2400	5.1	
5.5	2180	201.00	1690	1.20	JRTS59DN71M6 JRTSF59DN71M6 JRTSA59DN71M6 JRTSAF59DN71M6
6.0	2020	184.80	1710	1.30	
7.0	1770	158.12	1750	1.45	
8.0	1560	137.05	1780	1.65	
8.6	1470	128.10	1790	1.75	
8.5	1490	201.00	1790	1.75	JRTS59DN71S4 JRTSF59DN71S4 JRTSA59DN71S4 JRTSAF59DN71S4
9.2	1380	184.80	1800	1.90	
11	1210	158.12	1810	2.2	
12	1060	137.05	1830	2.5	
13	1000	128.10	1830	2.6	
15	880	110.73	1840	3.0	
18	760	94.08	1850	3.5	
20	685	84.00	1850	3.7	
8.5	1440	201.00	1210	1.05	JRTS49DN71S4 JRTSF49DN71S4 JRTSA49DN71S4 JRTSAF49DN71S4
9.2	1340	184.80	1220	1.10	
11	1170	158.12	1240	1.25	
12	1030	137.05	1260	1.45	
13	970	128.10	1260	1.50	
15	850	110.73	1270	1.75	
18	740	94.08	1290	2.0	
20	665	84.00	1290	2.2	
24	580	71.75	1300	2.5	
24	660	69.39	1290	2.1	
25	545	67.20	1300	2.6	
27	610	63.80	1290	2.2	
31	525	54.59	1260	2.6	
36	460	47.32	1210	3.0	
485	39	6.80	375	3.6	JRTS39DN63M2 JRTSF39DN63M2 JRTSA39DN63M2 JRTSAF39DN63M2
521	37	6.33	365	5.8	
613	31	5.38	345	5.6	
678	28	4.86	335	5.6	
832	23	3.97	315	5.3	
17	740	98.80	675	1.00	JRTS39DN71S4 JRTSF39DN71S4 JRTSA39DN71S4 JRTSAF39DN71S4
20	660	86.36	675	1.10	
21	620	80.96	675	1.15	
24	555	71.44	675	1.25	
27	500	63.33	675	1.40	
30	525	55.93	675	1.35	
33	485	51.30	675	1.45	
39	420	43.68	675	1.65	
45	365	37.66	675	1.85	
48	340	35.10	675	1.95	

Output speed n_a [r/min]	Output torque T_a lbf·in	Ratio i	Permitted overhung load F_{Ra} [1] lbf	Service factor f_B	Model
0.33HP					
55	300	30.68	675	2.1	JRTS39DN71S4 JRTSF39DN71S4 JRTSA39DN71S4 JRTSAF39DN71S4
59	280	28.76	675	2.3	
67	250	25.38	675	2.5	
76	225	22.50	650	2.7	
85	210	19.89	610	2.1	
93	196	18.24	600	2.2	
109	168	15.53	575	2.5	
127	145	13.39	550	2.9	
136	136	12.48	540	3.0	
156	119	10.91	520	3.3	
166	112	10.23	510	3.5	
188	99	9.02	495	3.8	
212	88	8.00	480	4.3	
250	75	6.80	455	4.8	
268	71	6.33	445	4.4	
316	60	5.38	425	5.0	
350	55	4.86	410	5.3	
429	45	3.97	385	6.3	
0.50HP					
0.83	20300	2054	6270	1.10	JRTS89R59DN71M4 JRTSF89R59DN71M4 JRTSA89R59DN71M4 JRTSAF89R59DN71M4
0.93	18000	1824	6380	1.25	
1.0	16200	1631	6450	1.35	
1.8	9710	930	6650	2.3	
2.0	8780	831	6670	2.5	
2.4	9400	714	3010	1.15	JRTS79R39DN71M4 JRTSF79R39DN71M4 JRTSA79R39DN71M4 JRTSAF79R39DN71M4
2.7	8350	637	3180	1.30	
3.0	7560	574	3290	1.45	
3.4	6500	499	3420	1.70	
3.9	5740	438	3490	1.90	
4.4	5100	389	3550	2.1	
4.7	4530	365	1960	1.10	JRTS69R39DN71M4 JRTSF69R39DN71M4 JRTSA69R39DN71M4 JRTSAF69R39DN71M4
5.3	3940	319	2080	1.30	
6.1	3460	281	2170	1.45	
6.9	3140	246	2210	1.60	
4.3	4790	256.47	3570	2.3	JRTS79DN80M6 JRTSF79DN80M6 JRTSA79DN80M6 JRTSAF79DN80M6
4.9	4270	225.26	3600	2.6	
5.1	4070	214.00	3600	2.8	
5.1	3770	217.41	2120	1.30	JRTS69DN80M6 JRTSF69DN80M6 JRTSA69DN80M6 JRTSAF69DN80M6
5.8	3350	190.11	2180	1.45	
6.1	3200	180.60	2200	1.55	
6.9	2850	158.45	2250	1.70	
7.8	2570	217.41	2280	1.80	JRTS69DN71M4 JRTSF69DN71M4 JRTSA69DN71M4 JRTSAF69DN71M4
8.9	2280	190.11	2310	2.0	
9.4	2180	180.60	2320	2.1	
11	1940	158.45	2340	2.4	
13	1670	134.40	2360	2.8	
14	1520	121.33	2370	3.0	
8.0	2360	137.05	1650	1.10	JRTS59DN80M6 JRTSF59DN80M6 JRTSA59DN80M6 JRTSAF59DN80M6
8.6	2230	128.10	1680	1.15	
9.9	1960	110.73	1720	1.35	
12	1700	94.08	1760	1.55	
13	1540	84.00	1780	1.70	

Output speed n_a [r/min]	Output torque T_a lbf·in	Ratio i	Permitted overhung load F_{Ra} [1] lbf	Service factor f_B	Model
0.50HP					
8.5	2260	201.00	1670	1.15	
9.2	2100	184.80	1700	1.25	
11	1830	158.12	1740	1.40	
12	1610	137.05	1770	1.60	
13	1520	128.10	1780	1.70	JRTS59DN71M4 JRTSF59DN71M4 JRTSA59DN71M4 JRTSAF59DN71M4
15	1330	110.73	1800	1.95	
18	1150	94.08	1820	2.3	
20	1040	84.00	1830	2.4	
24	900	71.75	1840	2.7	
24	1010	69.39	1830	2.1	
25	850	67.20	1840	2.7	
27	940	63.80	1840	2.3	
13	1470	128.10	1200	1.00	
15	1290	110.73	1230	1.15	
18	1120	94.08	1250	1.30	
20	1010	84.00	1260	1.45	
24	880	71.75	1270	1.70	
24	1000	69.39	1250	1.35	
25	830	67.20	1280	1.75	
27	920	63.80	1240	1.50	JRTS49DN71M4 JRTSF49DN71M4 JRTSA49DN71M4 JRTSAF49DN71M4
31	800	54.59	1200	1.70	
36	700	47.32	1160	1.95	
38	655	44.22	1140	2.1	
44	570	38.23	1090	2.4	
52	490	32.48	1050	2.8	
59	440	29.00	1020	3.1	
69	380	24.77	970	3.4	
73	355	23.20	960	3.5	
84	330	20.33	890	2.9	
96	290	17.62	860	3.3	
103	270	16.47	840	3.5	
412	70	8.00	385	2.5	
485	60	6.80	365	2.4	JRTS39DN71S2 JRTSF39DN71S2 JRTSA39DN71S2 JRTSAF39DN71S2
521	56	6.33	355	3.8	
613	48	5.38	340	3.7	
678	43	4.86	330	3.7	
832	35	3.97	310	3.5	
39	635	43.68	675	1.10	
45	555	37.66	675	1.20	
48	515	35.10	675	1.30	
55	455	30.68	660	1.40	
59	430	28.76	650	1.50	
67	380	25.38	635	1.65	
76	340	22.50	615	1.80	JRTS39DN71M4 JRTSF39DN71M4 JRTSA39DN71M4 JRTSAF39DN71M4
85	320	19.89	570	1.35	
93	295	18.24	560	1.45	
109	250	15.53	540	1.65	
127	220	13.39	525	1.90	
136	205	12.48	515	2.0	
156	181	10.91	500	2.2	
166	170	10.23	490	2.3	
188	151	9.02	475	2.5	
212	134	8.00	460	2.8	

Output speed n_a [r/min]	Output torque T_a lbf·in	Ratio i	Permitted overhung load F_{Ra} [1] lbf	Service factor f_B	Model
0.50HP					
250	114	6.80	440	3.2	
268	107	6.33	430	2.9	JRTS39DN71M4 JRTSF39DN71M4 JRTSA39DN71M4 JRTSAF39DN71M4
316	91	5.38	410	3.3	
350	83	4.86	400	3.5	
429	68	3.97	380	4.2	
0.75HP					
1.3	20600	1332	6250	1.05	
1.4	18600	1191	6350	1.20	
1.6	16200	1032	6450	1.35	
1.8	15100	930	6490	1.45	JRTS89R59DN80S4 JRTSF89R59DN80S4 JRTSA89R59DN80S4 JRTSAF89R59DN80S4
2.0	13600	831	6540	1.60	
2.4	11800	719	6600	1.85	
2.7	10300	624	6640	2.1	
3.0	9320	558	6660	2.4	
3.9	7450	435	6700	2.9	
3.9	8860	438	3100	1.25	
4.3	7890	389	3250	1.40	JRTS79R39DN80S4 JRTSF79R39DN80S4 JRTSA79R39DN80S4 JRTSAF79R39DN80S4
5.2	6660	327	3400	1.65	
5.8	6050	289	3460	1.80	
6.8	5220	250	3540	2.1	
6.9	4810	246	1900	1.05	
7.7	4280	221	2020	1.20	JRTS69R39DN80S4 JRTSF69R39DN80S4 JRTSA69R39DN80S4 JRTSAF69R39DN80S4
8.6	3920	198	2090	1.30	
10	3350	168	2180	1.50	
3.9	8350	288.00	6680	2.5	
4.3	7570	258.18	6700	2.8	JRTS89DN90S6 JRTSF89DN90S6 JRTSA89DN90S6 JRTSAF89DN90S6
5.0	6610	222.40	6710	3.1	
5.5	6090	202.96	6720	3.4	
4.4	7070	256.47	3350	1.60	
5.0	6300	225.26	3440	1.80	JRTS79DN90S6 JRTSF79DN90S6 JRTSA79DN90S6 JRTSAF79DN90S6
5.2	6020	214.00	3470	1.85	
5.9	5380	189.09	3520	2.1	
6.9	4680	161.60	3580	2.4	
6.6	4890	256.47	3560	2.3	
7.5	4350	225.26	3600	2.6	JRTS79DN80S4 JRTSF79DN80S4 JRTSA79DN80S4 JRTSAF79DN80S4
7.9	4160	214.00	3600	2.7	
8.9	3710	189.09	3600	3.0	
7.8	3880	217.41	2100	1.20	
8.9	3440	190.11	2170	1.35	
9.4	3290	180.60	2190	1.40	
11	2920	158.45	2240	1.55	
13	2520	134.40	2290	1.80	JRTS69DN80S4 JRTSF69DN80S4 JRTSA69DN80S4 JRTSAF69DN80S4
14	2300	121.33	2310	2.0	
16	2050	106.75	2340	2.2	
17	1940	100.80	2340	2.4	
20	1680	85.83	2360	2.7	
23	1700	75.06	2360	2.5	
26	1490	65.63	2370	2.8	
12	2510	94.08	1620	1.05	
13	2270	84.00	1670	1.15	JRTS59DN90S6 JRTSF59DN90S6 JRTSA59DN90S6 JRTSAF59DN90S6
16	1970	71.75	1720	1.30	
17	1860	67.20	1740	1.40	
21	1800	54.59	1750	1.35	



Output speed n_a [r/min]	Output torque T_a lbf·in	Ratio i	Permitted overhung load F_{Ra} 1) lbf	Service factor f_B	Model
0.75HP					
24	1570	47.32	1780	1.50	JRTS59DN90S6 JRTSF59DN90S6 JRTSA59DN90S6 JRTSAF59DN90S6
25	1480	44.22	1790	1.60	
29	1290	38.23	1810	1.85	
12	2430	137.05	1640	1.05	JRTS59DN80S4 JRTSF59DN80S4 JRTSA59DN80S4 JRTSAF59DN80S4
13	2290	128.10	1670	1.15	
15	2010	110.73	1710	1.30	
18	1740	94.08	1760	1.50	
20	1570	84.00	1780	1.60	
24	1360	71.75	1800	1.80	
25	1280	67.20	1810	1.80	
31	1220	54.59	1810	1.75	
36	1070	47.32	1830	2.0	
38	1000	44.22	1830	2.1	
44	870	38.23	1760	2.5	
52	750	32.48	1680	2.9	
58	670	29.00	1630	3.2	
68	580	24.77	1560	3.4	
73	545	23.20	1530	3.4	
83	505	20.33	1440	2.9	
24	1320	71.75	1220	1.10	JRTS49DN80S4 JRTSF49DN80S4 JRTSA49DN80S4 JRTSAF49DN80S4
25	1250	67.20	1230	1.15	
31	1200	54.59	1110	1.15	
36	1050	47.32	1080	1.30	
38	990	44.22	1060	1.40	
44	860	38.23	1030	1.60	
52	740	32.48	990	1.85	
58	665	29.00	970	2.0	
68	570	24.77	930	2.2	
73	535	23.20	920	2.3	
83	500	20.33	850	1.95	
96	435	17.62	820	2.2	
103	410	16.47	810	2.4	
119	355	14.24	780	2.7	
140	300	12.10	745	3.2	
156	270	10.80	725	3.5	
183	230	9.23	695	4.0	
59	650	28.76	585	1.00	JRTS39DN80S4 JRTSF39DN80S4 JRTSA39DN80S4 JRTSAF39DN80S4
67	575	25.38	575	1.10	
75	515	22.50	565	1.20	
88	440	19.13	550	1.35	
109	380	15.53	490	1.10	
126	330	13.39	480	1.25	
135	310	12.48	475	1.30	
155	270	10.91	465	1.45	
165	255	10.23	460	1.55	
187	225	9.02	445	1.70	
211	200	8.00	435	1.90	
249	172	6.80	420	2.1	
267	161	6.33	410	1.90	
314	138	5.38	395	2.2	
347	125	4.86	385	2.3	
426	102	3.97	365	2.8	

Output speed n_a [r/min]	Output torque T_a lbf·in	Ratio i	Permitted overhung load F_{Ra} 1) lbf	Service factor f_B	Model
0.75HP					
428	101	8.00	365	1.75	
503	86	6.80	350	1.65	JRTS39DN71M2 JRTSF39DN71M2 JRTSA39DN71M2 JRTSAF39DN71M2
540	81	6.33	345	2.6	
635	69	5.38	330	2.6	
703	62	4.86	320	2.5	
862	51	3.97	300	2.4	
1.0HP					
1.4	33700	1223	7540	1.10	
1.6	29600	1070	7730	1.25	
1.9	25400	928	7890	1.45	
2.1	22400	824	7990	1.65	JRTS99R59DN80M4 JRTSF99R59DN80M4 JRTSA99R59DN80M4 JRTSAF99R59DN80M4
2.5	16300	714	8160	2.3	
2.8	17100	626	8140	2.2	
3.2	14700	538	8190	2.5	
3.6	13300	484	8220	2.8	
1.7	21300	1032	6220	1.05	
1.9	19700	930	6300	1.10	
2.1	17800	831	6380	1.25	
2.4	15500	719	6480	1.45	
2.8	13500	624	6550	1.65	
3.1	12200	558	6590	1.80	JRTS89R59DN80M4 JRTSF89R59DN80M4 JRTSA89R59DN80M4 JRTSAF89R59DN80M4
3.6	10700	485	6630	2.1	
4.0	9790	435	6650	2.2	
4.6	8580	378	6680	2.5	
5.4	7480	323	6700	2.8	
6.9	6950	255	6710	2.5	
7.9	6090	222	6720	2.9	
4.5	10200	389	2840	1.05	
5.3	8680	327	3130	1.25	JRTS79R39DN80M4 JRTSF79R39DN80M4 JRTSA79R39DN80M4 JRTSAF79R39DN80M4
6.1	7840	289	3250	1.40	
7.0	6790	250	3380	1.60	
8.0	6000	219	3470	1.85	
10	4360	168	2000	1.15	JRTS69R39DN80M4 JRTSF69R39DN80M4 JRTSA69R39DN80M4 JRTSAF69R39DN80M4
11	4080	156	2060	1.25	
4.0	10700	288.00	6630	2.0	
4.5	9730	258.18	6650	2.2	JRTS89DN90S6 JRTSF89DN90S6 JRTSA89DN90S6 JRTSAF89DN90S6
5.2	8500	222.40	6680	2.4	
5.7	7820	202.96	6690	2.6	
6.5	7010	180.00	6710	2.9	
6.1	7430	288.00	6700	2.7	JRTS89DN80M4 JRTSF89DN80M4 JRTSA89DN80M4 JRTSAF89DN80M4
6.8	6720	258.18	6710	3.0	
7.9	5860	222.40	6730	3.3	
8.6	5390	202.96	6730	3.6	
5.2	8100	225.26	3220	4.10	
5.4	7740	214.00	3270	1.45	
6.2	6930	189.09	3370	1.60	
7.2	6010	161.60	3470	1.85	
7.9	5560	148.15	3510	2.0	JRTS79DN90S6 JRTSF79DN90S6 JRTSA79DN90S6 JRTSAF79DN90S6
9.0	4940	130.00	3560	2.3	
9.5	4700	123.20	3580	2.4	
11	4160	107.83	3600	2.6	
12	3780	97.14	3600	2.8	
16	3410	7509	3600	2.9	
16	3250	71.33	3600	3.0	

Output speed n_a [r/min]	Output torque T_a lbf·in	Ratio i	Permitted overhung load F_{Ra} [1] lbf	Service factor f_B	Model
1.0HP					
6.8	6320	256.47	3440	1.80	
7.8	5620	225.26	3000	2.0	
8.2	5360	214.00	3530	2.1	
9.3	4790	189.09	3570	2.3	JRTS79DN80M4 JRTSF79DN80M4 JRTSA79DN80M4 JRTSAF79DN80M4
11	4150	161.60	3600	2.6	
12	3830	148.15	3600	2.8	
13	3400	130.00	3600	3.0	
14	3240	123.20	3600	3.1	
16	2860	107.83	3600	3.4	
8.7	4690	134.40	1930	1.05	
9.6	4280	121.33	2020	1.15	
11	3820	106.75	2110	1.25	
12	3630	100.80	2140	1.35	
14	3140	85.83	2210	1.55	
15	2880	78.00	2250	1.70	
18	2830	65.63	2250	1.65	
19	2700	62.35	2270	1.70	JRTS69DN90S6 JRTSF69DN90S6 JRTSA69DN90S6 JRTSAF69DN90S6
21	2380	54.70	2300	1.95	
25	2040	46.40	2310	2.3	
28	1850	41.89	2250	2.5	
32	1640	36.85	2180	2.8	
33	1550	34.80	2150	3.0	
48	1170	24.44	1880	2.7	
50	1110	23.22	1860	2.8	
9.2	4440	190.11	1980	1.05	
9.7	4240	180.60	2030	1.10	
11	3780	158.45	2110	1.20	
13	3260	134.40	2200	1.40	
14	2970	121.33	2240	1.55	
16	2640	106.75	2280	1.75	
17	2510	100.80	2290	1.85	JRTS69DN80M4 JRTSF69DN80M4 JRTSA69DN80M4 JRTSAF69DN80M4
20	2160	85.83	2320	2.1	
22	1980	78.00	2340	2.3	
23	2190	75.06	2320	1.95	
27	1930	65.63	2280	2.2	
28	1840	62.35	2250	2.3	
32	1620	54.70	2170	2.6	
38	1390	46.40	2080	3.0	
16	2540	71.75	1620	1.05	
17	2390	67.20	1650	1.10	
21	2050	56.61	1710	1.25	
25	2020	47.32	1710	1.20	
26	1900	44.22	1730	1.25	
30	1650	38.23	1770	1.45	
36	1420	32.48	1790	1.70	JRTS59DN90S6 JRTSF59DN90S6 JRTSA59DN90S6 JRTSAF59DN90S6
40	1270	29.00	1750	1.85	
47	1100	24.77	1680	2.2	
50	1030	23.20	1650	2.3	
60	870	19.54	1580	2.5	
66	830	17.62	1480	1.80	
71	785	16.47	1450	1.90	
82	680	14.24	1400	2.2	
96	580	12.10	1340	2.6	
108	520	10.80	1300	2.9	

Output speed n_a [r/min]	Output torque T_a lbf·in	Ratio i	Permitted overhung load F_{Ra} [1] lbf	Service factor f_B	Model
1.0HP					
16	2600	110.73	1600	1.00	
19	2240	94.08	1670	1.20	
21	2020	84.00	1710	1.25	
24	1750	71.75	1750	1.40	
26	1650	67.20	1770	1.40	
31	1410	56.61	1790	1.40	
32	1580	54.59	1780	1.35	
37	1380	47.32	1790	1.55	JRTS59DN80M4 JRTSF59DN80M4 JRTSA59DN80M4 JRTSAF59DN80M4
40	1290	44.22	1760	1.65	
46	1130	38.23	1690	1.90	
54	960	32.48	1620	2.2	
60	860	29.00	1570	2.5	
71	745	24.77	1510	2.6	
75	700	23.20	1480	2.6	
86	650	20.33	1380	2.3	
90	595	19.54	1410	2.7	
99	565	17.62	1330	2.6	
106	530	16.47	1310	2.8	
123	460	14.24	1260	3.2	
36	1400	32.48	1000	1.05	
40	1260	29.00	980	1.20	
47	1080	24.77	960	1.35	
50	1020	23.20	940	1.40	
60	870	19.54	910	1.55	
66	830	17.62	820	1.20	
71	780	16.47	820	1.25	
82	680	14.24	800	1.45	JRTS49DN90S6 JRTSF49DN90S6 JRTSA49DN90S6 JRTSAF49DN90S6
96	580	12.10	775	1.70	
108	520	10.80	760	1.90	
126	445	9.23	735	2.2	
135	420	8.64	725	2.3	
160	355	7.28	695	2.7	
170	335	6.83	680	2.5	
182	315	6.40	670	2.6	
216	265	5.39	640	2.9	
37	1360	47.32	990	1.00	
40	1280	44.22	980	1.05	
46	1110	38.23	960	1.25	
54	950	32.48	930	1.45	
60	850	29.00	910	1.60	
71	740	24.77	880	1.75	
75	695	23.20	870	1.80	
86	645	20.33	790	1.50	JRTS49DN80M4 JRTSF49DN80M4 JRTSA49DN80M4 JRTSAF49DN80M4
90	585	19.54	840	1.85	
99	560	17.62	770	1.70	
106	525	16.47	760	1.80	
123	455	14.24	740	2.1	
145	390	12.10	710	2.5	
162	350	10.80	695	2.7	
190	300	9.23	665	3.1	
203	280	8.64	655	3.1	
241	235	7.28	630	3.2	



Output speed n_a [r/min]	Output torque T_a lbf·in	Ratio i	Permitted overhung load F_{Ra} [1] lbf	Service factor f_B	Model
1.0HP					
274	210	6.40	605	3.2	JRTS49DN80M4 JRTSF49DN80M4 JRTSA49DN80M4 JRTSAF49DN80M4
325	179	5.39	575	3.2	
368	159	4.76	560	3.2	
438	134	4.00	530	3.2	
478	122	7.28	520	1.60	JRTS49DN80S2 JRTSF49DN80S2 JRTSA49DN80S2 JRTSAF49DN80S2
509	115	6.83	510	2.6	
543	108	6.40	500	2.5	
645	91	5.39	475	2.3	
730	81	4.76	460	2.2	
869	68	4.00	435	2.1	
146	385	8.00	435	1.10	JRTS39DN90S6 JRTSF39DN90S6 JRTSA39DN90S6 JRTSAF39DN90S6
171	325	6.80	425	1.25	
184	305	6.33	415	1.30	
216	260	5.38	405	1.45	
240	235	4.86	395	1.55	
294	196	3.97	380	1.80	
92	565	19.13	500	1.05	JRTS39DN80M4 JRTSF39DN80M4 JRTSA39DN80M4 JRTSAF39DN80M4
140	400	12.48	435	1.00	
161	350	10.91	425	1.15	
171	325	10.23	425	1.20	
194	290	9.02	415	1.30	
219	255	8.00	405	1.45	
258	220	6.80	395	1.65	
276	205	6.33	385	1.50	
325	177	5.38	375	1.70	
360	161	4.86	365	1.80	
442	131	3.97	350	2.2	
511	113	6.80	340	1.25	JRTS39DN80S2 JRTSF39DN80S2 JRTSA39DN80S2 JRTSAF39DN80S2
549	106	6.33	330	2.0	
646	90	5.38	320	1.95	
715	82	4.86	310	1.95	
877	67	3.97	295	1.85	
1.5HP					
2.1	33900	824	7530	1.10	JRTS99R59DN90S4 JRTSF99R59DN90S4 JRTSA99R59DN90S4 JRTSAF99R59DN90S4
2.5	24700	714	7920	1.50	
2.8	26000	626	7870	1.45	
3.3	22300	538	8000	1.65	
3.6	20100	484	8060	1.85	
4.2	17500	420	8130	2.1	
4.7	15900	376	8170	2.3	
5.4	14000	327	8210	2.6	
2.8	20600	624	6260	1.05	JRTS89R59DN90S4 JRTSF89R59DN90S4 JRTSA89R59DN90S4 JRTSAF89R59DN90S4
3.2	18600	558	6350	1.20	
3.6	16300	485	6440	1.35	
4.0	14900	435	6500	1.45	
4.7	13000	378	6560	1.65	
5.5	11300	323	6610	1.85	
6.3	9990	281	6650	2.1	
6.9	10500	255	6630	1.65	
7.9	9270	222	6660	1.90	
8.6	8700	205	6670	2.0	
4.1	16500	286.40	8150	2.2	JRTS99DN90L6 JRTSF99DN90L6 JRTSA99DN90L6 JRTSAF99DN90L6
4.5	15200	262.22	8180	2.4	
5.1	13600	231.67	8210	2.7	

Output speed n_a [r/min]	Output torque T_a lbf·in	Ratio i	Permitted overhung load F_{Ra} [1] lbf	Service factor f_B	Model
1.5HP					
5.3	12500	222.40	6580	1.65	JRTS89DN90L6 JRTSF89DN90L6 JRTSA89DN90L6 JRTSAF89DN90L6
5.8	11500	202.96	6600	1.80	
6.1	11000	288.00	6620	1.80	JRTS89DN90S4 JRTSF89DN90S4 JRTSA89DN90S4 JRTSAF89DN90S4
6.8	10000	258.18	6640	2.0	
7.9	8740	222.40	6670	2.2	
8.7	8040	202.96	6690	2.4	
9.8	7200	180.00	6700	2.6	
12	6120	151.30	6720	3.0	
6.9	9420	256.47	3000	1.20	JRTS79DN90S4 JRTSF79DN90S4 JRTSA79DN90S4 JRTSAF79DN90S4
7.8	8380	225.26	3170	1.35	
8.2	8000	214.00	3230	1.40	
9.3	7150	189.09	3340	1.55	
11	6200	161.60	3450	1.75	
12	5720	148.15	3490	1.85	
14	5070	130.00	3550	2.0	
14	4830	123.20	3570	2.1	
16	4270	107.83	3600	2.3	
18	3870	97.14	3540	2.5	
21	3420	85.22	3420	2.7	
23	3450	75.09	3200	2.8	
25	3290	71.33	3160	3.0	
15	4430	121.33	1990	1.05	JRTS69DN90S4 JRTSF69DN90S4 JRTSA69DN90S4 JRTSAF69DN90S4
17	3940	106.75	2080	1.15	
17	3740	100.80	2120	1.25	
21	3230	85.83	2200	1.40	
23	2960	78.00	2240	1.50	
23	3260	75.06	2180	1.30	
27	2880	65.63	2120	1.45	
28	2740	62.35	2100	1.55	
32	2420	54.70	2040	1.75	
38	2070	46.40	1970	2.0	
42	1880	41.89	1920	2.3	
48	1660	36.85	1860	2.5	
51	1570	34.80	1840	2.7	
59	1350	29.63	1760	3.1	
72	1180	24.44	1610	2.5	
76	1120	23.22	1590	2.7	
37	2060	47.32	1660	1.05	JRTS59DN90S4 JRTSF59DN90S4 JRTSA59DN90S4 JRTSAF59DN90S4
40	1930	44.22	1630	1.10	
46	1680	38.23	1590	1.30	
54	1440	32.48	1530	1.50	
61	1290	29.00	1490	1.65	
71	1110	24.77	1440	1.75	
76	1040	23.20	1410	1.80	
87	960	20.33	1300	1.55	
90	880	19.54	1350	1.80	
100	840	17.62	1260	1.75	
107	790	16.47	1240	1.90	
124	685	14.24	1200	2.2	
146	585	12.10	1150	2.5	
163	525	10.80	1120	2.9	

Output speed n_a [r/min]	Output torque T_a lbf·in	Ratio i	Permitted overhung load F_{Ra} [1] lbf	Service factor f_B	Model
1.5HP					
191	450	9.23	1070	2.9	JRTS59DN90S4 JRTSF59DN90S4 JRTSA59DN90S4 JRTSAF59DN90S4
204	420	8.64	1050	3.0	
258	335	6.83	980	2.6	
275	315	6.40	970	2.7	
479	182	7.28	830	2.6	JRTS59DN80M2 JRTSF59DN80M2 JRTSA59DN80M2 JRTSAF59DN80M2
510	173	6.83	810	2.8	
545	162	6.40	795	2.7	
646	137	5.39	755	2.7	
732	121	4.76	725	2.6	
871	102	4.00	685	2.4	
61	1280	29.00	810	1.05	JRTS49DN90S4 JRTSF49DN90S4 JRTSA49DN90S4 JRTSAF49DN90S4
71	1100	24.77	800	1.15	
76	1030	23.20	790	1.20	
87	960	20.33	695	1.00	
90	870	19.54	770	1.25	
100	840	17.62	685	1.15	
107	785	16.47	680	1.20	
124	680	14.24	670	1.40	
146	580	12.10	655	1.65	
163	520	10.80	640	1.80	
191	445	9.23	620	2.1	
204	420	8.64	615	2.1	
242	355	7.28	590	2.1	
258	335	6.83	580	2.0	
275	315	6.40	570	2.1	
327	265	5.39	550	2.1	
370	235	4.76	535	2.2	
440	199	4.00	510	2.1	
479	182	7.28	500	1.05	JRTS49DN80M2 JRTSF49DN80M2 JRTSA49DN80M2 JRTSAF49DN80M2
510	173	6.83	490	1.75	
545	162	6.40	485	1.70	
646	137	5.39	460	1.55	
732	121	4.76	445	1.45	
871	102	4.00	425	1.40	
220	385	8.00	360	1.00	JRTS39DN90S4 JRTSF39DN90S4 JRTSA39DN90S4 JRTSAF39DN90S4
259	330	6.80	355	1.10	
278	305	6.33	345	1.00	
327	260	5.38	340	1.15	
362	235	4.86	335	1.20	
444	196	3.97	320	1.45	
550	159	6.33	310	1.35	JRTS39DN80M2 JRTSF39DN80M2 JRTSA39DN80M2 JRTSAF39DN80M2
647	135	5.38	300	1.30	
716	122	4.86	295	1.30	
879	100	3.97	280	1.25	
2.0HP					
2.5	33100	714	7570	1.10	JRTS99R59DN90L4 JRTSF99R59DN90L4 JRTSA99R59DN90L4 JRTSAF99R59DN90L4
2.8	34800	626	7490	1.05	
3.3	29900	538	7720	1.25	
3.6	27100	484	7830	1.35	
4.2	23500	420	7960	1.60	
4.7	21300	376	8030	1.75	
5.4	18700	327	8100	2.0	
6.2	16500	287	8150	2.2	
7.0	14400	252	8200	2.6	
8.1	12500	219	8230	3.0	

Output speed n_a [r/min]	Output torque T_a lbf·in	Ratio i	Permitted overhung load F_{Ra} [1] lbf	Service factor f_B	Model
2.0HP					
3.6	22000	485	6180	1.00	JRTS89R59DN90L4 JRTSF89R59DN90L4 JRTSA89R59DN90L4 JRTSAF89R59DN90L4
4.1	20000	435	6290	1.10	
4.7	17600	378	6400	1.25	
5.5	15300	323	6490	1.40	
6.3	13400	281	6550	1.60	
6.9	14200	255	6520	1.25	
8.0	12400	222	6570	1.40	
8.6	11600	205	6600	1.50	
4.1	22000	286.40	8010	1.70	JRTS99DN100L6 JRTSF99DN100L6 JRTSA99DN100L6 JRTSAF99DN100L6
4.5	20300	262.22	8060	1.85	
5.1	18100	231.67	8120	2.0	
6.0	15600	196.52	8170	2.4	
6.2	15200	286.40	8180	2.3	JRTS99DN90L4 JRTSF99DN90L4 JRTSA99DN90L4 JRTSAF99DN90L4
6.7	14000	262.22	8210	2.5	
7.6	12500	231.67	8230	2.8	
9.0	10700	196.52	8260	3.2	
5.3	16800	222.40	6430	1.25	JRTS89DN100L6 JRTSF89DN100L6 JRTSA89DN100L6 JRTSAF89DN100L6
5.8	15400	202.96	6480	1.35	
6.6	13800	180.00	6540	1.45	
6.1	14700	288.00	6510	1.35	JRTS89DN90L4 JRTSF89DN90L4 JRTSA89DN90L4 JRTSAF89DN90L4
6.8	13300	258.18	6550	1.50	
8.0	11600	222.40	6600	1.70	
8.7	10600	202.96	6630	1.80	
9.8	9570	180.00	6660	1.95	
12	8150	151.30	6690	2.2	
13	7530	139.05	6700	2.4	
14	6740	123.48	6710	2.6	
16	6060	110.40	6720	2.8	
18	5490	99.26	6730	3.0	
19	5690	91.20	6730	2.4	
22	5120	81.76	6730	2.8	
8.3	10600	214.00	2760	1.05	JRTS79DN90L4 JRTSF79DN90L4 JRTSA79DN90L4 JRTSAF79DN90L4
9.3	9510	189.09	2990	1.15	
11	8240	161.60	3200	1.30	
12	7610	148.15	3280	1.40	
14	6750	130.00	3390	1.55	
14	6420	123.20	3420	1.60	
16	5680	107.83	3470	1.75	
18	5150	97.14	3390	1.85	
21	4560	85.22	3290	2.0	
24	4600	75.09	3050	2.1	
25	4380	71.33	3020	2.2	
27	3620	66.67	3100	2.4	
28	3890	63.03	2930	2.5	
31	3110	56.92	2970	2.6	
33	3340	53.87	2830	2.9	
36	3070	49.38	2770	3.2	
41	2710	43.33	2680	3.6	
21	4300	85.83	2020	1.05	JRTS69DN90L4 JRTSF69DN90L4 JRTSA69DN90L4 JRTSAF69DN90L4
23	3930	78.00	2090	1.15	
27	3830	65.63	1970	1.10	
28	3650	62.35	1960	1.15	



Output speed n_a [r/min]	Output torque T_a lbf·in	Ratio i	Permitted overhung load F_{Ra} [1] lbf	Service factor f_B	Model
2.0HP					
32	3220	54.70	1920	1.30	
38	2750	46.40	1860	1.55	
42	2500	41.89	1820	1.70	
48	2210	36.85	1780	1.90	
51	2090	34.80	1750	2.0	
60	1790	29.63	1690	2.4	JRTS69DN90L4
66	1630	26.93	1660	2.5	JRTSF69DN90L4
72	1570	24.44	1530	1.90	JRTSA69DN90L4
76	1490	23.22	1510	2.0	JRTSAF69DN90L4
87	1310	20.37	1470	2.3	
102	1120	17.28	1420	2.7	
113	1010	15.60	1390	3.0	
129	890	13.73	1340	3.4	
54	1910	32.48	1440	1.15	
61	1720	29.00	1410	1.25	
71	1480	24.77	1370	1.30	
76	1390	23.20	1350	1.35	
90	1180	19.54	1300	1.35	
100	1120	17.62	1190	1.30	
107	1050	16.47	1170	1.40	
124	910	14.24	1140	1.65	JRTS59DN90L4
146	775	12.10	1100	1.90	JRTSF59DN90L4
164	695	10.80	1070	2.1	JRTSA59DN90L4
192	595	9.23	1040	2.2	JRTSAF59DN90L4
205	560	8.64	1020	2.2	
243	470	7.28	980	2.3	
259	445	6.83	950	1.95	
276	420	6.40	940	2.1	
328	355	5.39	900	2.4	
371	310	4.76	870	2.4	
442	265	4.00	830	2.4	
482	240	7.28	810	2.0	
513	225	6.83	795	2.1	JRTS59DN90S2
548	210	6.40	780	2.1	JRTSF59DN90S2
650	181	5.39	740	2.0	JRTSA59DN90S2
736	160	4.76	715	1.95	JRTSAF59DN90S2
876	135	4.00	680	1.85	
124	910	14.24	600	1.05	
146	775	12.10	595	1.25	
164	695	10.80	590	1.35	
192	595	9.23	580	1.55	
205	560	8.64	575	1.60	JRTS49DN90L4
243	470	7.28	555	1.60	JRTSF49DN90L4
259	445	6.83	545	1.55	JRTSA49DN90L4
276	420	6.40	540	1.60	JRTSAF49DN90L4
328	355	5.39	520	1.60	
371	310	4.76	510	1.65	
442	265	4.00	490	1.60	
513	225	6.83	475	1.30	
548	210	6.40	465	1.30	JRTS49DN90S2
650	181	5.39	445	1.15	JRTSF49DN90S2
736	160	4.76	435	1.10	JRTSA49DN90S2
876	135	4.00	415	1.05	JRTSAF49DN90S2
446	260	3.97	295	1.10	JRTS39DN90L4 JRTSF39DN90L4 JRTSA39DN90L4 JRTSAF39DN90L4
553	210	6.33	290	1.00	JRTS39DN90S2
651	179	5.38	280	1.00	JRTSA39DN90S2
721	162	4.86	275	1.00	JRTSAF39DN90S2

Output speed n_a [r/min]	Output torque T_a lbf·in	Ratio i	Permitted overhung load F_{Ra} [1] lbf	Service factor f_B	Model
3.0HP					
4.2	35700	420	7440	1.05	
4.7	32300	376	7610	1.15	
5.4	28300	327	7780	1.30	JRTS99R59DN100S4
6.1	25000	287	7910	1.50	JRTSF99R59DN100S4
7.0	21900	252	8010	1.70	JRTSA99R59DN100S4
8.1	19100	219	8090	1.95	JRTSAF99R59DN100S4
8.6	18000	205	8120	2.1	
5.1	27300	231.67	7830	1.35	JRTS99DN112M6
6.0	23400	196.52	7960	1.55	JRTSF99DN112M6 JRTSA99DN112M6 JRTSAF99DN112M6
6.2	22900	286.40	7980	1.55	
6.7	21100	262.22	8040	1.65	
7.6	18800	231.67	8100	1.85	
9.0	16100	196.52	8160	2.1	
9.7	14900	180.95	8190	2.2	JRTS99DN100S4
11	13400	161.74	8220	2.4	JRTSF99DN100S4
12	12100	145.60	8240	2.6	JRTSA99DN100S4
13	11100	131.85	8260	2.7	JRTSAF99DN100S4
15	9910	116.92	8270	3.0	
17	9000	105.71	8280	3.1	
20	7690	89.60	8300	3.5	
6.8	20000	258.18	6280	1.00	
7.9	17400	222.40	6400	1.10	
8.7	16000	202.96	6460	1.20	
9.8	14400	180.00	6520	1.30	
12	12200	151.30	6590	1.50	
13	11300	139.05	6610	1.60	
14	10100	123.48	6640	1.70	JRTS89DN100S4
16	9120	110.40	6670	1.85	JRTSF89DN100S4
18	8250	99.26	6680	1.95	JRTSA89DN100S4
20	7220	86.15	6700	2.2	JRTSAF89DN100S4
22	7700	81.76	6690	1.85	
23	6500	77.14	6720	2.3	
25	6670	70.43	6710	2.1	
27	6110	64.27	6720	2.3	
31	5440	57.00	6730	2.6	
14	10100	130.00	2870	1.00	
14	9660	123.20	2960	1.05	
16	8540	107.83	3150	1.15	
18	7750	97.14	3110	1.25	
21	6850	85.22	3040	1.35	
23	6090	75.20	2970	1.45	
26	5440	66.67	2900	1.60	JRTS79DN100S4
28	5850	63.03	2690	1.65	JRTSF79DN100S4
31	4680	56.92	2800	1.75	JRTSA79DN100S4
33	5030	53.87	2620	1.95	JRTSAF79DN100S4
36	4620	49.38	2580	2.1	
41	4080	43.33	2510	2.4	
43	3870	41.07	2490	2.5	
49	3400	35.94	2420	2.8	
54	3070	32.38	2360	3.0	
62	2710	28.41	2290	3.2	

Output speed n_a [r/min]	Output torque T_a lbf·in	Ratio i	Permitted overhung load F_{Ra} [1] lbf	Service factor f_B	Model
3.0HP					
70	2400	25.07	2220	3.5	JRTS79DN100S4 JRTSF79DN100S4 JRTSA79DN100S4 JRTSAF79DN100S4
77	2250	22.89	2060	2.8	
84	2070	20.99	2020	3.0	
38	4140	46.40	1650	1.00	JRTS69DN100S4 JRTSF69DN100S4 JRTSA69DN100S4 JRTSAF69DN100S4
42	3760	41.89	1630	1.15	
48	3330	36.85	1610	1.30	
51	3150	34.80	1590	1.35	
59	2700	29.63	1550	1.55	
65	2460	26.93	1530	1.65	
76	2140	23.33	1490	1.65	
86	1980	20.37	1340	1.50	
102	1680	17.28	1310	1.80	
113	1520	15.60	1280	1.95	
128	1340	13.73	1250	2.2	
136	1270	12.96	1240	2.4	
160	1080	11.03	1200	2.8	
176	990	10.03	1170	2.8	
203	860	8.69	1140	2.9	
233	750	7.56	1100	3.0	
257	680	13.73	1070	2.8	JRTS69DN90L2 JRTSF69DN90L2 JRTSA69DN90L2 JRTSAF69DN90L2
272	640	12.96	1060	2.7	
319	550	11.03	1020	2.7	
352	500	10.03	990	2.7	
406	430	8.69	950	2.5	
466	375	7.56	920	2.2	
124	1370	14.24	1030	1.10	JRTS59DN100S4 JRTSF59DN100S4 JRTSA59DN100S4 JRTSAF59DN100S4
146	1170	12.10	1010	1.30	
163	1040	10.80	990	1.40	
191	900	9.23	960	1.45	
204	840	8.64	950	1.50	
242	710	7.28	920	1.50	
258	675	6.83	900	1.30	
275	630	6.40	890	1.35	
327	535	5.39	850	1.55	
370	470	4.76	830	1.55	
440	395	4.00	795	1.55	
484	360	7.28	780	1.30	JRTS59DN90L2 JRTSF59DN90L2 JRTSA59DN90L2 JRTSAF59DN90L2
516	340	6.83	765	1.40	
551	315	6.40	750	1.40	
654	265	5.39	715	1.35	
740	235	4.76	695	1.30	
881	200	4.00	660	1.25	
191	890	9.23	490	1.05	JRTS49DN100S4 JRTSF49DN100S4 JRTSA49DN100S4 JRTSAF49DN100S4
204	840	8.64	490	1.05	
242	710	7.28	490	1.05	
258	675	6.83	480	1.00	
275	630	6.40	475	1.05	
327	530	5.39	470	1.10	
370	470	4.76	460	1.10	
440	395	4.00	450	1.05	

Output speed n_a [r/min]	Output torque T_a lbf·in	Ratio i	Permitted overhung load F_{Ra} [1] lbf	Service factor f_B	Model
4.0HP					
6.1	33400	287	7550	1.10	JRTS99R59DN100L4 JRTSF99R59DN100L4 JRTSA99R59DN100L4 JRTSAF99R59DN100L4
7.0	29300	252	7740	1.25	
8.1	25600	219	7890	1.45	
8.6	24100	205	7940	1.55	
6.2	30500	286.40	7690	1.15	JRTS99DN100L4 JRTSF99DN100L4 JRTSA99DN100L4 JRTSAF99DN100L4
6.7	28100	262.22	7790	1.25	
7.6	25100	231.67	7910	1.40	
9.0	21500	196.52	8020	1.60	
9.7	19900	180.95	8070	1.65	
11	17900	161.74	8120	1.80	
12	16200	145.60	8160	1.95	
13	14800	131.85	8190	2.1	
15	13200	116.92	8220	2.2	
17	12000	105.71	8240	2.4	
20	10200	89.60	8270	2.6	
22	10300	80.85	8270	2.8	
9.8	19100	180.00	6330	1.00	JRTS89DN100L4 JRTSF89DN100L4 JRTSA89DN100L4 JRTSAF89DN100L4
12	16300	151.30	6450	1.10	
13	15000	139.05	6490	1.20	
14	13500	123.48	6550	1.30	
16	12100	110.40	6590	1.40	
18	11000	99.26	6620	1.50	
20	9620	86.15	6650	1.65	
22	10200	81.76	6640	1.40	
23	8660	77.14	6680	1.75	
25	8890	70.43	6670	1.60	
27	8140	64.27	6680	1.75	
31	7250	57.00	6700	1.95	
37	6120	47.91	6720	2.3	
40	5640	44.03	6730	2.5	
45	5020	39.10	6720	2.8	
50	4510	34.96	6530	3.1	
21	9140	85.22	2790	1.00	JRTS79DN100L4 JRTSF79DN100L4 JRTSA79DN100L4 JRTSAF79DN100L4
23	8120	75.20	2740	1.10	
26	7250	66.67	2700	1.20	
28	7790	63.03	2440	1.25	
31	6240	56.92	2630	1.30	
33	6700	53.87	2410	1.45	
36	6160	49.38	2380	1.60	
41	5430	43.33	2340	1.80	
43	5160	41.07	2320	1.90	
49	4540	35.94	2270	2.1	
54	4100	32.38	2230	2.2	
62	3610	28.41	2180	2.4	
70	3190	25.07	2120	2.6	
77	3010	22.89	1930	2.1	
84	2760	20.99	1900	2.2	JRTS79DN100L4 JRTSF79DN100L4 JRTSA79DN100L4 JRTSAF79DN100L4
96	2430	18.42	1860	2.6	
101	2300	17.45	1840	2.7	
115	2020	15.28	1790	3.1	
128	1820	13.76	1750	3.5	
146	1600	12.07	1700	4.0	
165	1420	10.65	1650	4.5	



Output speed n_a [r/min]	Output torque T_a lbf·in	Ratio i	Permitted overhung load F_{Ra} 1) lbf	Service factor f_B	Model
4.0HP					
51	4200	34.80	1430	1.00	
60	3600	29.63	1410	1.20	
65	3280	26.93	1400	1.25	
76	2850	23.33	1380	1.25	
87	2630	20.37	1200	1.15	
102	2240	17.28	1190	1.35	JRTS69DN100L4 JRTSF69DN100L4 JRTSA69DN100L4 JRTSAF69DN100L4
113	2030	15.60	1180	1.50	
128	1790	13.73	1160	1.70	
136	1690	12.96	1150	1.75	
160	1450	11.03	1130	2.1	
176	1320	10.03	1110	2.1	
203	1140	8.69	1080	2.2	
233	1000	7.56	1050	2.2	
256	910	13.73	1030	2.1	
271	860	12.96	1020	2.0	JRTS69DN100L2 JRTSF69DN100L2 JRTSA69DN100L2 JRTSAF69DN100L2
319	735	11.03	980	2.0	
351	665	10.03	960	2.0	
405	580	8.69	920	1.90	
465	505	7.56	890	1.65	
163	1390	10.80	900	1.05	
191	1190	9.23	890	1.10	
204	1120	8.64	880	1.10	JRTS59DN100L4 JRTSF59DN100L4 JRTSA59DN100L4 JRTSAF59DN100L4
242	950	7.28	860	1.15	
275	840	6.40	830	1.05	
327	710	5.39	810	1.20	
370	630	4.76	790	1.20	
441	530	4.00	760	1.20	
407	570	8.64	780	1.05	
483	480	7.28	750	1.00	
515	455	6.83	735	1.05	JRTS59DN100L2 JRTSF59DN100L2 JRTSA59DN100L2 JRTSAF59DN100L2
550	425	6.40	725	1.05	
652	360	5.39	695	1.00	
739	315	4.76	675	0.95	
5.0HP					
7.0	36900	252	7230	1.00	JRTS99R59DN100L4
8.0	32200	219	7610	1.15	JRTSF99R59DN100L4 JRTSA99R59DN100L4
8.6	30300	205	7700	1.20	JRTSAF99R59DN100L4
6.7	35300	262.22	7460	1.00	
7.6	31400	231.67	7650	1.10	
8.9	27000	196.52	7840	1.25	
9.7	24900	180.95	7910	1.35	
11	22400	161.74	7990	1.45	
12	20300	145.60	8060	1.55	JRTS99DN100L4
13	18500	131.85	8110	1.65	JRTSF99DN100L4 JRTSA99DN100L4
15	16500	116.92	8150	1.80	JRTSAF99DN100L4
17	15000	105.71	8190	1.90	
20	12800	89.60	8230	2.1	
22	12900	8085	8220	2.2	
25	11500	71.43	8250	2.5	
29	9820	60.59	8270	3.0	

Output speed n_a [r/min]	Output torque T_a lbf·in	Ratio i	Permitted overhung load F_{Ra} 1) lbf	Service factor f_B	Model
5.0HP					
14	16900	123.48	6420	1.00	
16	15200	110.40	6490	1.10	
18	13700	99.26	6540	1.20	
20	12000	86.15	6590	1.30	
22	12800	81.76	6560	1.10	
23	10800	77.14	6620	1.40	JRTS89DN100L4
25	11100	70.43	6610	1.25	JRTSF89DN100L4
27	10200	64.27	6640	1.40	JRTSA89DN100L4
31	9080	57.00	6660	1.55	JRTSAF89DN100L4
37	7680	47.91	6690	1.85	
40	7070	44.03	6700	2.0	
45	6300	39.10	6600	2.2	
50	5650	34.96	6430	2.5	
56	5090	31.43	6260	2.8	
69	4240	25.50	5780	2.6	
28	9770	63.03	2190	1.00	
31	7830	56.92	2460	1.05	
33	8400	53.87	2190	1.15	
3	7730	49.38	2190	1.25	
41	6810	43.33	2170	1.45	
43	6470	41.07	2160	1.50	JRTS79DN100L4
49	5690	35.94	2130	1.65	JRTSF79DN100L4
54	5140	32.38	2100	1.80	JRTSA79DN100L4
62	4520	28.41	2060	1.95	JRTSAF79DN100L4
70	4010	25.07	2020	2.1	
77	3770	22.89	1800	1.65	
84	3460	20.99	1780	1.80	
95	3050	18.42	1750	2.1	
101	2890	17.45	1740	2.2	
115	2540	15.28	1700	2.5	
128	2290	13.76	1670	2.8	
146	2010	12.07	1630	3.2	
165	1780	10.65	1590	3.6	
230	1280	15.28	1480	3.6	
255	1160	13.76	1440	3.7	JRTS79DN100L2
291	1010	12.07	1400	3.6	JRTSF79DN100L2
329	900	10.65	1350	3.6	JRTSA79DN100L2
371	795	9.44	1310	3.5	JRTSAF79DN100L2
435	680	8.06	1260	3.4	
65	4110	26.93	1280	1.00	
75	3580	23.33	1270	1.00	
102	2810	17.28	1080	1.05	
113	2550	15.60	1080	1.20	
128	2250	13.73	1070	1.35	JRTS69DN100L4
136	2120	12.96	1070	1.40	JRTSF69DN100L4
159	1810	11.03	1050	1.65	JRTSA69DN100L4
175	1650	10.03	1040	1.70	JRTSAF69DN100L4
202	1430	8.69	1020	1.70	
233	1250	7.56	1000	1.75	
256	1140	13.73	980	1.65	
271	1070	12.96	970	1.65	
318	920	11.03	940	1.60	JRTS69DN100L2
350	830	10.03	920	1.60	JRTSF69DN100L2
404	725	8.69	900	1.50	JRTSA69DN100L2
464	630	7.56	870	1.35	JRTSAF69DN100L2

Output speed n_a [r/min]	Output torque T_a lbf·in	Ratio i	Permitted overhung load F_{Ra} [1] lbf	Service factor f_B	Model
5.4HP					
8.1	34600	219	7490	1.05	JRTS99R59DN112M4 JRTSF99R59DN112M4 JRTSA99R59DN112M4 JRTSAF99R59DN112M4
8.6	32600	205	7600	1.15	
7.6	33700	231.67	7540	1.05	
9.0	28900	196.52	7760	1.15	
9.8	26800	180.95	7840	1.25	
11	24100	161.74	7940	1.35	
12	21800	145.60	8010	1.45	
13	19900	131.85	8070	1.55	JRTS99DN112M4 JRTSF99DN112M4 JRTSA99DN112M4 JRTSAF99DN112M4
15	17700	116.92	8120	1.65	
17	16100	105.71	8160	1.75	
20	13700	89.60	8210	1.95	
22	13900	80.85	8210	2.1	
25	12300	71.43	8240	2.4	
29	10500	60.59	8260	2.8	
32	9730	55.79	8280	3.0	
16	16300	110.40	6450	1.05	
18	14800	99.26	6500	1.10	
21	12900	86.15	6560	1.20	
23	11600	77.14	6600	1.30	
25	11900	70.43	6590	1.20	
28	10900	64.27	6620	1.30	JRTS89DN112M4 JRTSF89DN112M4 JRTSA89DN112M4 JRTSAF89DN112M4
31	9750	57.00	6650	1.45	
37	8240	47.91	6680	1.70	
40	7590	44.03	6690	1.85	
45	6760	39.10	6540	2.1	
51	6060	34.96	6380	2.3	
56	5470	31.43	6210	2.6	
65	4760	27.28	6000	3.0	
69	4560	25.50	5720	2.4	
83	3840	21.43	5500	2.9	
33	9020	53.87	2110	1.10	
36	8300	49.38	2110	1.15	
41	7310	43.33	2100	1.35	
43	6940	41.07	2090	1.40	
49	6100	35.94	2070	1.55	
55	5520	32.38	2050	1.65	
62	4860	28.41	2010	1.80	
71	4300	25.07	1980	1.95	JRTS79DN112M4 JRTSF79DN112M4 JRTSA79DN112M4 JRTSAF79DN112M4
77	4050	22.89	1740	1.55	
84	3720	20.99	1730	1.70	
96	3270	18.42	1710	1.90	
101	3100	17.45	1700	2.0	
116	2720	15.28	1670	2.3	
129	2460	13.76	1640	2.6	
147	2160	12.07	1600	3.0	
166	1910	10.65	1570	3.4	
187	1690	9.44	1530	3.4	
219	1450	8.06	1480	3.5	

Output speed n_a [r/min]	Output torque T_a lbf·in	Ratio i	Permitted overhung load F_{Ra} [1] lbf	Service factor f_B	Model
5.4HP					
233	1370	15.28	1460	3.4	
258	1230	13.76	1420	3.4	
294	1080	12.07	1380	3.4	JRTS79DN112M2 JRTSF79DN112M2 JRTSA79DN112M2 JRTSAF79DN112M2
333	960	10.65	1340	3.4	
376	850	9.44	1300	3.3	
440	725	8.06	1240	3.2	
102	3020	17.28	1030	1.00	
113	2730	15.60	1040	1.10	
129	2410	13.73	1040	1.25	
136	2280	12.96	1030	1.30	JRTS69DN112M4 JRTSF69DN112M4 JRTSA69DN112M4 JRTSAF69DN112M4
160	1950	11.03	1020	1.55	
176	1770	10.03	1010	1.55	
204	1540	8.69	1000	1.60	
234	1340	7.56	980	1.65	
259	1210	13.73	960	1.55	
274	1150	12.96	950	1.55	
322	980	11.03	930	1.50	JRTS69DN112M2 JRTSF69DN112M2 JRTSA69DN112M2 JRTSAF69DN112M2
354	890	10.03	910	1.50	
409	775	8.69	880	1.40	
470	675	7.56	850	1.25	
7.5HP					
12	30400	145.60	7700	1.05	
13	27600	131.85	7810	1.10	
15	24700	116.92	7920	1.20	
17	22400	105.71	8000	1.25	
20	19100	89.60	8090	1.40	JRTS99DN132S4 JRTSF99DN132S4 JRTSA99DN132S4 JRTSAF99DN132S4
23	16800	78.26	8150	1.50	
25	17100	71.43	8140	1.70	
27	14100	65.45	8200	1.65	
29	14600	60.59	8190	2.0	
32	13500	55.79	8220	2.2	
35	12100	49.87	8240	2.4	
39	10900	44.89	8260	2.7	
43	9920	40.65	8260	2.9	
28	13500	64.00	6550	1.05	
31	13500	57.00	6540	1.05	
37	11400	47.91	6540	1.25	
40	10500	44.03	6440	1.35	
45	9400	39.10	6290	1.50	
51	8430	34.96	6150	1.70	
56	7600	31.43	6010	1.85	JRTS89DN132S4 JRTSF89DN132S4 JRTSA89DN132S4 JRTSAF89DN132S4
65	6610	27.28	5830	2.1	
69	6330	25.50	5490	1.75	
82	5340	21.43	5300	2.0	
90	4910	19.70	5210	2.2	
101	4370	17.49	5070	2.5	
113	3920	15.64	4950	2.8	
126	3530	14.06	4830	3.1	
145	3070	12.21	4670	3.6	
162	3570	10.93	4550	3.6	



Output speed n_a [r/min]	Output torque T_a lbf·in	Ratio i	Permitted overhung load F_{Ra} [1)] lbf	Service factor f_B	Model
7.5HP					
43	9650	41.07	1750	1.00	
49	8480	35.94	1770	1.10	
55	7670	32.38	1780	1.20	
62	6750	28.41	1780	1.30	
71	5980	25.07	1770	1.40	
80	5310	22.22	1750	1.55	
93	4550	18.97	1720	1.65	JRTS79DN132S4 JRTSF79DN132S4 JRTSA79DN132S4 JRTSAF79DN132S4
96	4550	18.42	1490	1.40	
101	4310	17.45	1490	1.45	
116	3780	15.28	1480	1.70	
128	3420	13.76	1470	1.85	
146	3000	12.07	1460	2.1	
166	2650	10.65	1440	2.4	
187	2360	9.44	1410	2.5	
219	2020	8.06	1380	2.5	
258	1720	13.76	1340	2.5	
294	1510	12.07	1310	2.4	JRTS79DN132S2 JRTSF79DN132S2 JRTSA79DN132S2 JRTSAF79DN132S2
333	1330	10.65	1270	2.4	
375	1180	9.44	1240	2.4	
439	1010	8.06	1200	2.3	
160	2710	11.03	810	1.10	JRTS69DN132S4 JRTSF69DN132S4 JRTSA69DN132S4 JRTSAF69DN132S4
176	2460	10.03	860	1.15	
204	2140	8.69	880	1.15	
234	1840	7.56	870	1.20	
258	1690	13.73	870	1.10	
273	1600	12.96	860	1.10	JRTS69DN132S2 JRTSF69DN132S2 JRTSA69DN132S2 JRTSAF69DN132S2
321	1360	11.03	850	1.10	
353	1240	10.03	840	1.05	
408	1080	8.69	820	1.00	
10.0HP					
20	25400	89.60	7890	1.05	
23	22300	78.26	8000	1.15	
25	22800	71.43	7980	1.30	
27	18800	65.45	8100	1.25	
29	19400	60.59	8080	1.50	
32	17900	55.79	8120	1.60	JRTS99DN132M4 JRTSF99DN132M4 JRTSA99DN132M4 JRTSAF99DN132M4
36	16100	49.87	8160	1.80	
40	14500	44.89	8160	2.0	
44	13100	40.65	8000	2.2	
49	11700	36.05	7790	2.4	
54	10600	32.60	7620	2.5	
67	8830	26.39	6960	2.6	
75	7910	23.59	6800	2.9	
84	7130	21.23	6650	3.2	
92	6430	19.23	6500	3.4	
40	14000	44.03	6100	1.00	
45	12400	39.10	5980	1.15	
51	11200	34.96	5870	1.25	JRTS89DN132M4 JRTSF89DN132M4 JRTSA89DN132M4 JRTSAF89DN132M4
56	10100	31.43	5760	1.40	
65	8790	27.28	5610	1.60	
70	8420	25.50	5200	1.30	

Output speed n_a [r/min]	Output torque T_a lbf·in	Ratio i	Permitted overhung load F_{Ra} [1)] lbf	Service factor f_B	Model
10.0HP					
83	7100	21.43	5060	1.55	
90	6530	19.70	4990	1.70	
101	5810	17.49	4880	1.90	
113	5210	15.64	4770	2.1	JRTS89DN132M4 JRTSF89DN132M4 JRTSA89DN132M4 JRTSAF89DN132M4
126	4690	14.06	4670	2.3	
145	4080	12.21	4530	2.7	
162	3650	10.93	4420	2.7	
196	3040	9.07	4240	2.8	
225	2640	7.88	4100	2.8	
227	2620	15.64	4090	2.6	
252	2360	14.06	3990	2.5	JRTS89DN132M2 JRTSF89DN132M2 JRTSA89DN132M2 JRTSAF89DN132M2
290	2050	12.21	3850	2.3	
324	1840	10.93	3740	2.1	
391	1530	9.07	3570	1.45	
450	1330	7.88	3440	1.35	
62	8970	28.41	1490	1.00	
71	7950	25.07	1520	1.05	
80	7060	22.22	1530	1.15	
93	6050	18.97	1530	1.25	
96	6040	18.42	840	1.05	JRTS79DN132M4 JRTSF79DN132M4 JRTSA79DN132M4 JRTSAF79DN132M4
102	5730	17.45	910	1.10	
116	5030	15.28	1060	1.25	
129	4510	13.76	1160	1.40	
147	3990	12.07	1270	1.60	
167	3530	10.65	1280	1.80	
188	3130	9.44	1280	1.85	
220	2680	8.06	1260	1.90	
232	2540	15.28	1260	1.85	
258	2290	13.76	1240	1.85	JRTS79DN132M2 JRTSF79DN132M2 JRTSA79DN132M2 JRTSAF79DN132M2
294	2010	12.07	1220	1.80	
333	1780	10.65	1200	1.80	
375	1580	9.44	1170	1.75	
440	1350	8.06	1140	1.70	
12.3HP					
27	23100	65.45	7970	1.00	
32	22000	55.79	8010	1.30	
36	19800	49.87	8050	1.45	
40	17800	44.89	7900	1.65	
44	16200	40.65	7760	1.75	
49	14400	36.05	7580	1.90	JRTS99DN132L4 JRTSF99DN132L4 JRTSA99DN132L4 JRTSAF99DN132L4
54	13000	32.60	7430	2.0	
67	10800	26.39	6740	2.1	
75	9720	23.59	6600	2.4	
84	8760	21.23	6470	2.6	
92	7950	19.23	6340	2.8	
104	7060	17.05	6180	3.0	
115	6390	15.42	6050	3.2	
136	5420	13.07	5830	3.5	
156	4740	11.41	5650	3.7	

Output speed n_a [r/min]	Output torque T_a lbf·in	Ratio i	Permitted overhung load F_{Ra} [1] lbf	Service factor f_B	Model
12.3HP					
51	13700	34.96	5620	1.05	
56	12400	31.43	5540	1.15	
65	10800	27.28	5410	1.30	
73	9700	24.43	5310	1.45	
88	8070	20.27	5130	1.55	
90	8030	19.70	4780	1.35	JRTS89DN132L4 JRTSF89DN132L4 JRTSA89DN132L4 JRTSAF89DN132L4
101	7150	17.49	4700	1.55	
113	6400	15.64	4610	1.70	
126	5760	14.06	4530	1.90	
145	5010	12.21	4410	2.2	
162	4490	10.93	4310	2.2	
196	3730	9.07	4140	2.2	
225	3250	7.88	4020	2.3	
94	7440	18.97	1360	1.00	
129	5580	13.76	685	1.15	JRTS79DN132L4 JRTSF79DN132L4 JRTSA79DN132L4 JRTSAF79DN132L4
147	4910	12.07	840	1.30	
167	4340	10.65	960	1.50	
188	3850	9.44	1060	1.50	
220	3300	8.06	1160	1.55	
15.0HP					
32	26900	55.79	7810	1.10	
36	24100	49.87	7700	1.20	
40	21700	44.89	7590	1.35	
44	19700	40.65	7480	1.45	
49	17500	36.05	7330	1.55	
54	15900	32.60	7200	1.65	
67	13200	26.39	6480	1.75	JRTS99DN160M4 JRTSF99DN160M4 JRTSA99DN160M4 JRTSAF99DN160M4
75	11800	23.59	6370	1.95	
84	10600	21.23	6260	2.1	
92	9690	19.23	6150	2.3	
104	8600	17.05	6010	2.5	
115	7790	15.42	5900	2.6	
136	610	13.07	5700	2.9	
156	5780	11.41	5530	3.1	
65	13100	27.28	5180	1.05	
73	11800	24.43	5100	1.20	
88	9840	20.27	4960	1.30	
90	9790	19.70	4550	1.10	
102	8710	17.49	4490	1.25	JRTS89DN160M4 JRTSF89DN160M4 JRTSA89DN160M4 JRTSAF89DN160M4
114	7800	15.64	4420	1.40	
126	7030	14.06	4360	1.55	
146	6110	12.21	4260	1.80	
163	5480	10.93	4180	1.80	
196	4550	9.07	4040	1.85	
225	3960	7.88	3920	1.85	
147	5980	12.07	350	1.05	
167	5290	10.65	525	1.20	JRTS79DN160M4 JRTSF79DN160M4 JRTSA79DN160M4 JRTSAF79DN160M4
188	4700	9.44	665	1.25	
220	4020	8.06	820	1.25	

Output speed n_a [r/min]	Output torque T_a lbf·in	Ratio i	Permitted overhung load F_{Ra} [1] lbf	Service factor f_B	Model
20.0HP					
40	29000	44.89	7020	1.00	
44	26300	40.65	6960	1.10	
49	23400	36.05	6870	1.20	
55	21200	32.60	6790	1.25	
67	17600	26.39	5990	1.30	
75	15700	23.59	5930	1.45	
84	14200	21.23	5870	1.60	JRTS99DN160L4 JRTSF99DN160L4 JRTSA99DN160L4 JRTSAF99DN160L4
92	12900	19.23	5800	1.70	
104	11400	17.05	5700	1.85	
115	10300	15.42	5610	1.95	
136	8810	13.07	5460	2.2	
156	7700	11.41	5320	2.3	
186	6450	9.55	5140	2.3	
215	5590	8.26	4990	2.3	
114	10400	15.64	4080	1.05	
126	9360	14.06	4050	1.15	
146	8140	12.21	3990	1.35	JRTS89DN160L4 JRTSF89DN160L4 JRTSA89DN160L4 JRTSAF89DN160L4
163	7300	10.93	3940	1.35	
196	6070	9.07	3830	1.40	
225	5280	7.88	3750	1.40	
25.0HP					
55	26400	32.60	6370	1.00	
64	22400	27.63	6270	1.10	
74	19600	24.13	6170	1.20	
84	17700	21.23	5480	1.30	
93	16100	19.23	5440	1.35	JRTS99DN180M4 JRTSF99DN180M4 JRTSA99DN180M4 JRTSAF99DN180M4
104	14300	17.05	5390	1.50	
116	12900	15.42	5330	1.55	
136	10900	13.07	5220	1.75	
156	9610	11.41	5110	1.85	
187	8050	9.55	4960	1.85	
216	6970	8.26	4830	1.85	
146	10100	12.21	3710	1.10	JRTS89DN180M4 JRTSF89DN180M4 JRTSA89DN180M4 JRTSAF89DN180M4
163	9110	10.93	3690	1.10	
196	7570	9.07	3630	1.10	
226	6590	7.88	3570	1.10	
30.0HP					
74	23600	24.13	5870	1.00	
84	21300	21.23	4800	1.05	
93	19300	19.23	5090	1.15	
104	17100	17.05	5070	1.25	JRTS99DN180L4 JRTSF99DN180L4 JRTSA99DN180L4 JRTSAF99DN180L4
116	15500	15.42	5050	1.30	
136	13100	13.07	4980	1.45	
156	11500	11.41	4900	1.55	
187	9660	9.55	4790	1.55	
216	8370	8.26	4680	1.50	
40.0HP					
136	17500	13.07	4460	1.10	JRTS99DN200L4 JRTSF99DN200L4 JRTSA99DN200L4 JRTSAF99DN200L4
156	15300	11.41	4480	1.15	
187	12800	9.55	4440	1.15	
216	11100	8.26	4380	1.15	

6. Features size table

JRTS39..

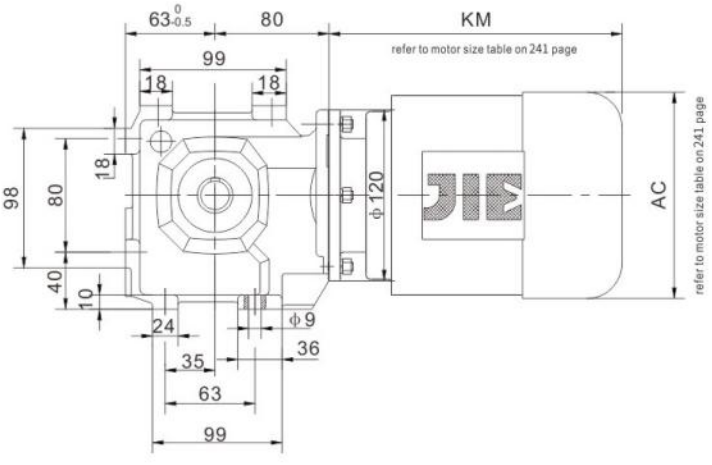

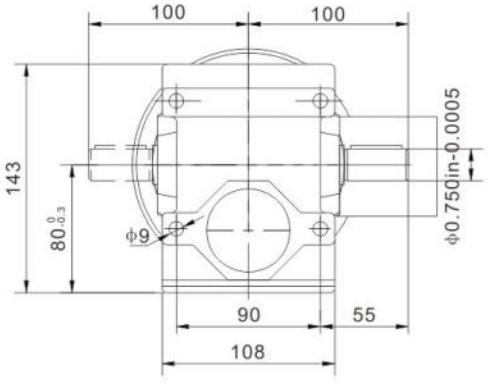

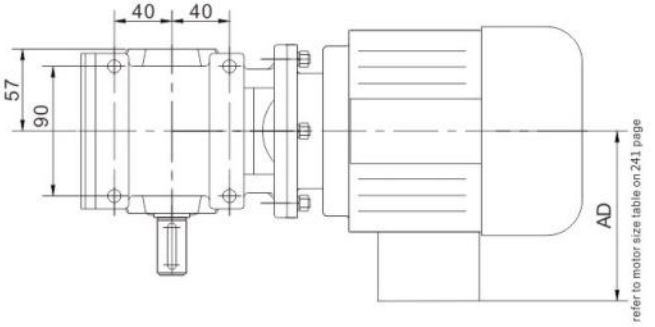

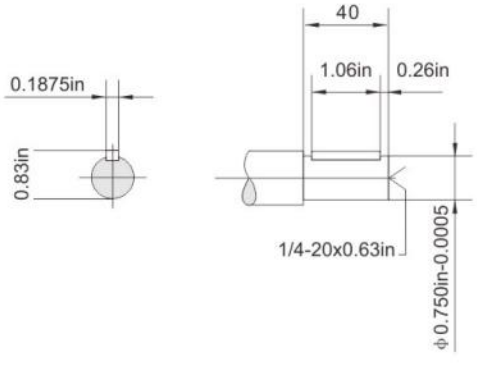

JRTSF39..

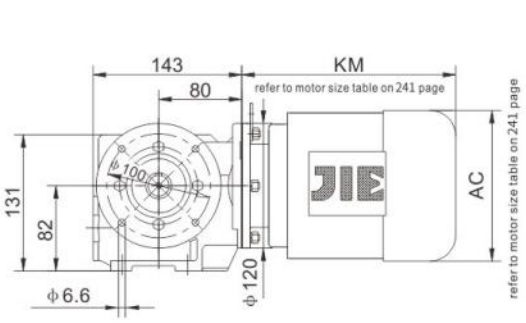

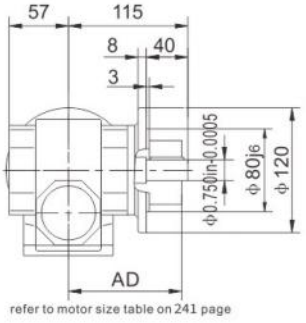

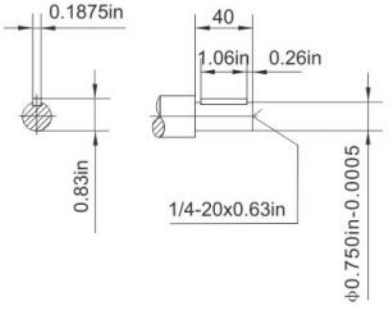

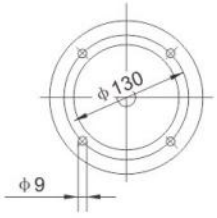

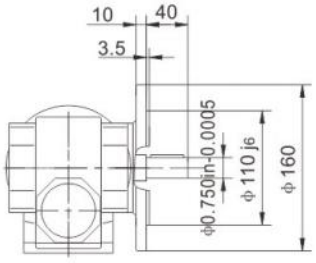

JRTSAF39..

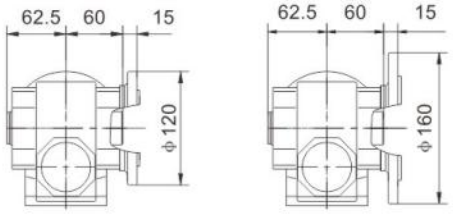

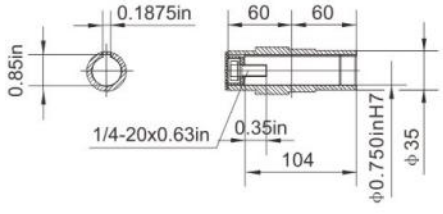

JRTSHF39..

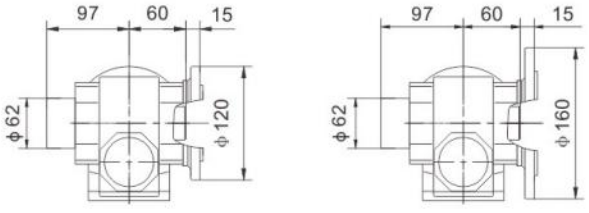

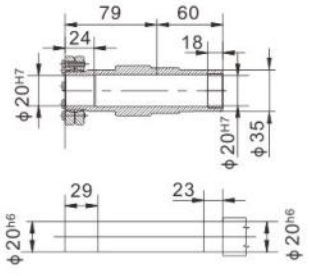

JRTSA39..

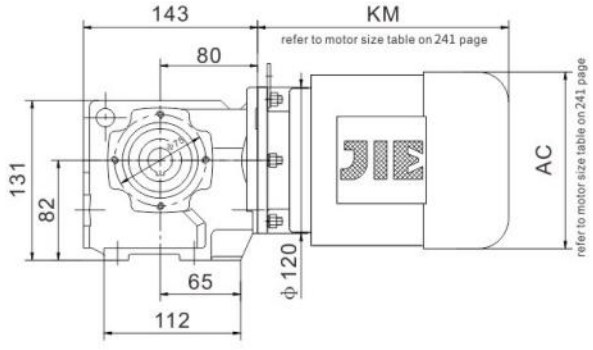

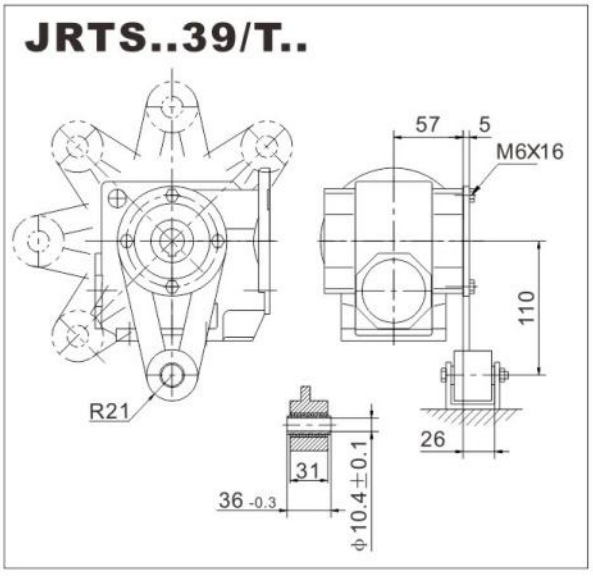

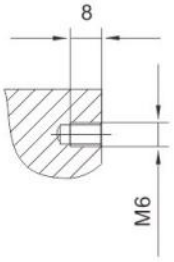

JRTSA39..

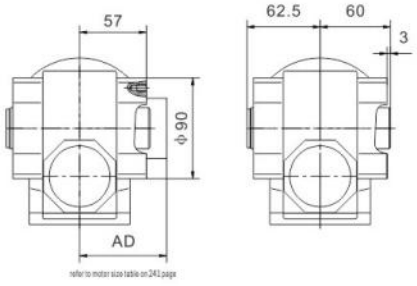

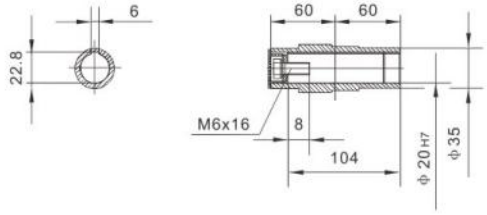

JRTSH39..

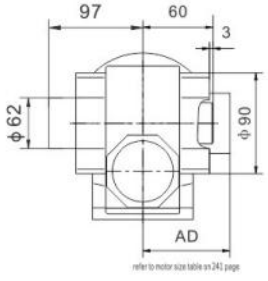

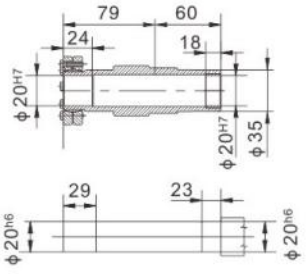

JRTS49..~JRTS99..

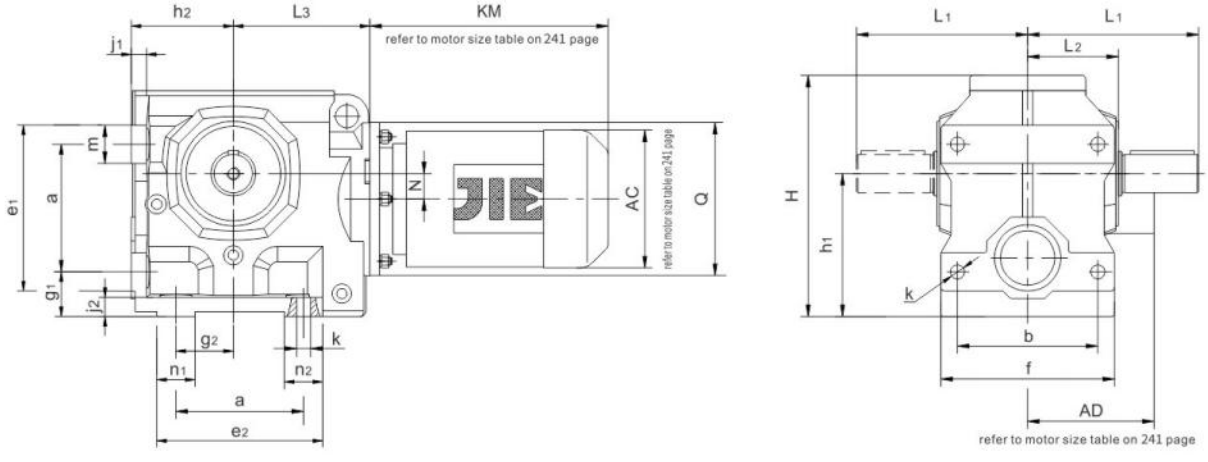

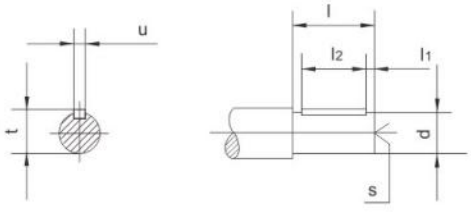

Model	a b	e_1 e_2 f	g_1 g_2	h_1 h_2	j_1 j_2 k	m n_1 n_2	Shaft dimension d l	 l_1 l_2	 s	 t u	L_1 L_2 L_3	H	N Q
JRTS49..	80 100	105 117 120	35 35	$100_{-0.5}$ $75_{-0.5}$	12 15 11	25 30 37	Φ0.750in-0.0005 50	0.26in 1.06in	1/4-20x0.63in	0.83in 0.1875in	115 60 96	164	8 120
JRTS59..	100 110	129 138.5 136	35 45	$112_{-0.5}$ $80_{-0.5}$	12 15 11	29 29 38.5	Φ1.000in-0.0005 60	0.33in 1.31in	3/8-60x0.86in	1.11in 0.250in	134 71 107	189	20 120
JRTS69..	130 130	166 171 160	40 60	$140_{-0.5}$ $106_{-0.5}$	15 20 13.5	36 45 41	Φ1.375in-0.0005 70	0.47in 1.81in	1/2-13x1.12in	1.51in 0.3125in	160 85.5 135	236	22 160
JRTS79..	135 150	177 198 185	70 75	$180_{-0.5}$ $125_{-0.5}$	25 25 17.5	42 50 69	Φ1.750in-0.001 90	1.92in 0.375in	5/8-11x1.38in	1.92in 0.375in	195 101 162	301	34 200
JRTS89..	180 200	227.5 238 250	82 92	$225_{-0.5}$ $150_{-0.5}$	30 30 22	50 60 67	Φ2.375in-0.001 120	2.65in 0.625in	3/4-10x1.61in	2.65in 0.625in	255 130 190	366	37.5 250
JRTS99..	235 250	295 303 300	90 115	280_{-1} $180_{-0.5}$	35 35 26	60 70 68	Φ2.875in-0.001 140	0.69in 4.13in	3/4-10x1.61in	3.20in 0.750in	295 150 240	457	52 300

JRTSF49..~JRTSF99..

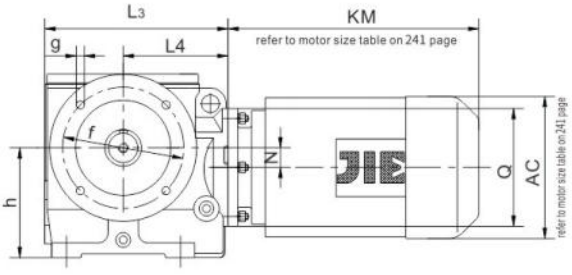

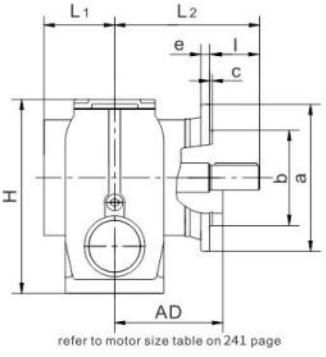

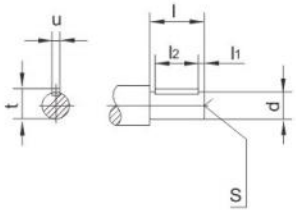

Fig.1

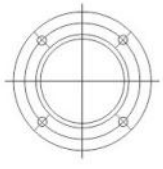

Fig.2

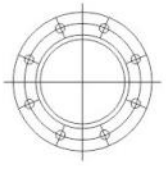

JRTSAF49..~JRTSAF99..

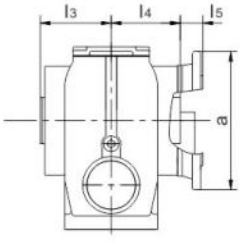

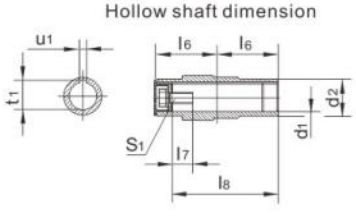

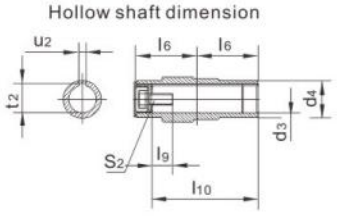

Model	flange form	a b	c e	f g h	Shaft dimension d l	 l_1 l_2	 s t u	Hollow shaft dimension d_1 d_2	 l_3 l_4 l_5	 l_6 l_7 l_8	 s_1 t_1 u_1	Hollow shaft dimension d_3 d_4	 l_9 l_{10}	 s_2 t_2 u_2	H N Q	L_1 L_2	L_3 L_4
JRTSF49.. JRTSAF49..	Flg.1	160 110j6	3.5 10	130 9 100	Φ0.750in-0.0005 50	0.26in 1.06in	1/4-20x0.63in 0.83in 0.1875in	Φ1.250inH7 Φ45	63 60 24	60 0.68in 105	7/16-14x1.00in 1.37in 0.250in	25H7 45	17 105	M10 × 25 28.3 8	179 8 120	57.5 133.5	171 96
JRTSF59.. JRTSAF59..	Flg.1	200 130j6	3.5 12	165 11 112	Φ1.000in-0.0005 60	0.33in 1.31in	3/8-60x0.86in 1.11in 0.250in	Φ1.375inH7 Φ50	78 75 25	75 0.67in 132	1/2-13x1.00in 1.53in 0.3125in	30H7 50	17 132	M10 × 25 33.3 8	189 20 120	72 160	187 107
JRTSF69.. JRTSAF69..	Flg.1	200 130j6	3.5 12	165 11 140	Φ1.375in-0.0005 70	0.47in 1.81in	1/2-13x1.12in 1.51in 0.3125in	Φ1.500inH7 Φ65	87 84 42.5	84 1.40in 144	5/8-11x1.75in 1.67in 0.375in	40H7 65	29 144	M16 × 40 43.3 12	236 22 160	80.5 190	240 135
JRTSF79.. JRTSAF79..	Flg.1	250 180j6	4 15	215 13.5 180	Φ1.750in-0.001 90	1.92in 0.375in	5/8-11x1.38in 1.92in 0.375in	Φ2.000inH7 Φ80	108 105 45.5	105 1.19in 180	5/8-11x1.75in 2.24in 0.500in	50H7 80	32 183	M16 × 45 53.8 14	301 34 200	121 232	287 162
JRTSF89.. JRTSAF89..	Flg.1	350 250h6	5 18	300 17.5 225	Φ2.375in-0.001 120	2.65in 0.625in	3/4-10x1.61in 2.65 in0.625in	Φ2.375inH7 Φ95	128 125 52.5	125 1.42in 220	3/4-10x2.00in 2.67in 0.625in	60H7 95	36 220	M20 × 50 64.4 18	366 37.5 250	145 290	340 190
JRTSF99.. JRTSAF99..	Flg.2	450 350h6	5 22	400 17.5 280	Φ2.875in-0.001 140	0.69in 4.13in	3/4-10x1.61in 3.20in 0.750in	Φ2.750inH7 Φ120	149 145 60	145 1.28in 255	3/4-10x2.00in 3.05in 0.625in	70H7 120	34 260	M20 × 50 74.9 20	457 52 300	165 340	420 240

JRTSHF49..~JRTSHF99..

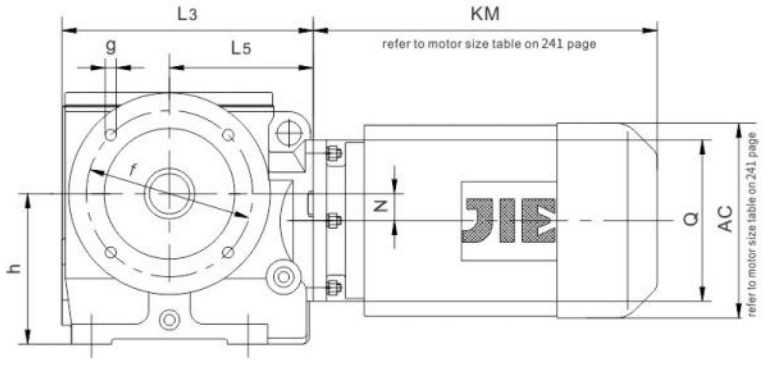

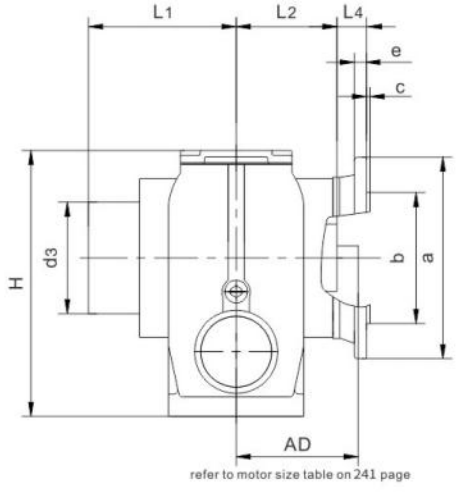

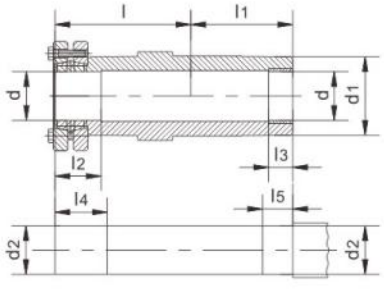

Fig.1

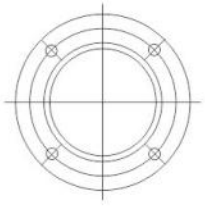

Fig.2

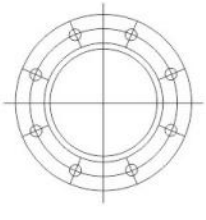

Model	flange form	a b	c e	f g h	l l1	l2 l3	l4 l5	d d1	d2 d3	H N Q	L1 L2	L3 L4	L5
JRTSHF49..	Flg.1	160 110j6	3.5 10	130 9 100	86 60	31 20	36 25	30H7 45	30h6 80	179 8 120	104 60	171 24	96
JRTSHF59..	Flg.1	200 130j6	3.5 12	165 11 112	102 75	32 20	37 25	35H7 50	35h6 88	189 20 120	121 75	187 25	107
JRTSHF69..	Flg.1	200 130j6	3.5 12	165 11 140	112 84	38 20	43 25	40H7 65	40h6 100	236 22 160	136 84	240 42.5	135
JRTSHF79..	Flg.1	250 180j6	4 15	215 13.5 180	136 105	36 30	41 35	50H7 80	50h6 124	301 34 200	176 105	287 45.5	162
JRTSHF89..	Flg.1	350 250h6	5 18	300 17.5 225	165 125	40 40	45 45	65H7 95	65h6 165	366 37.5 250	203 125	340 52.5	190
JRTSHF99..	Flg.2	450 350h6	5 22	400 17.5 145	190 145	55 50	60 55	75H7 120	75h6 200	457 52 300	224 145	420 60	240

JRTSA49..~JRTSA99..

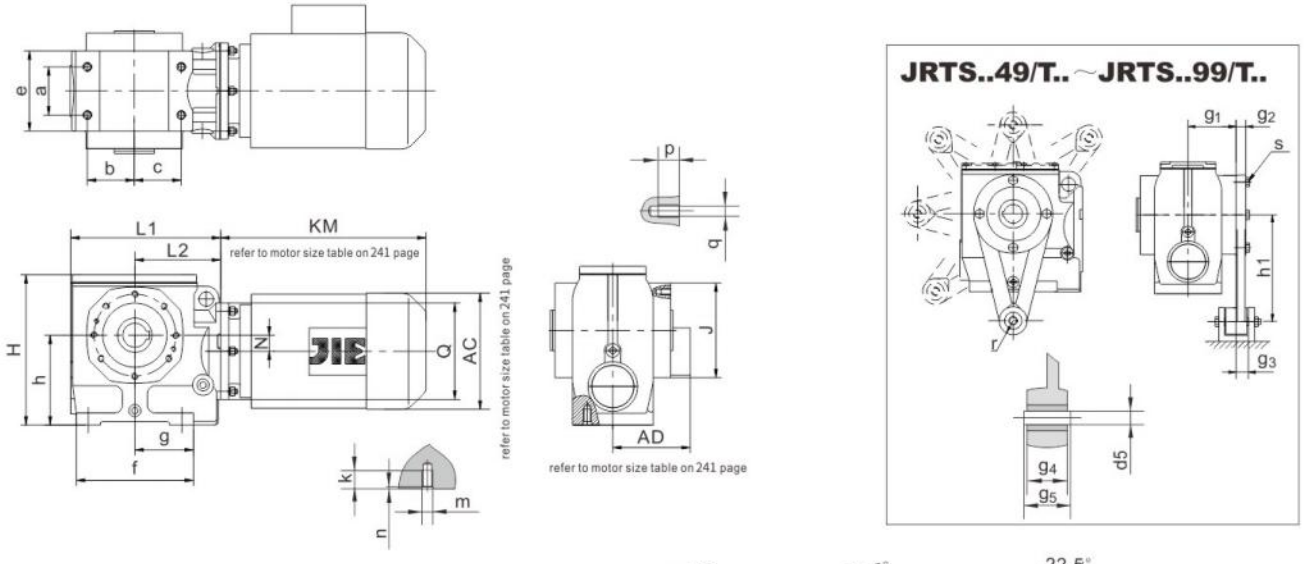

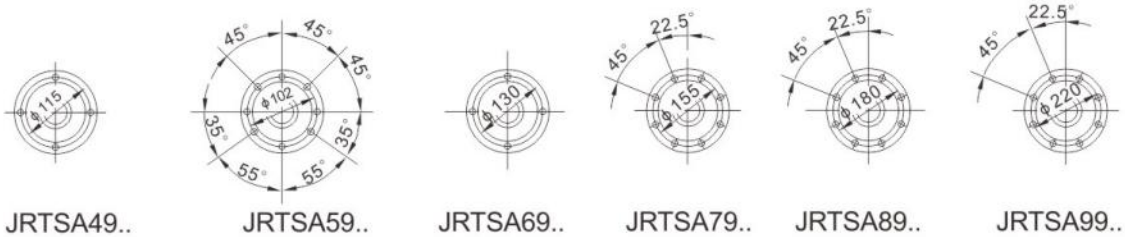

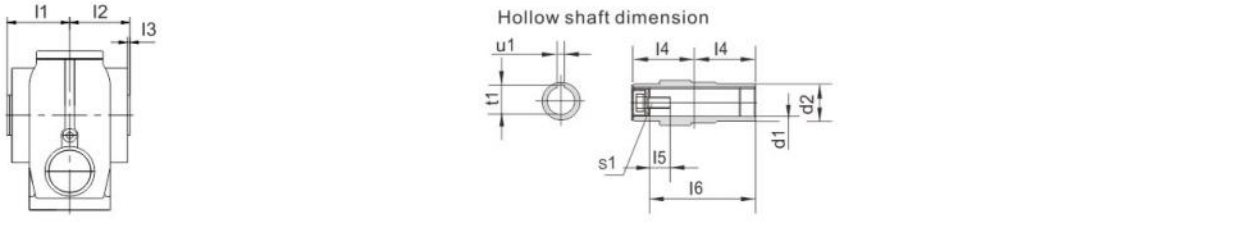

型 号 Model	a b c	e f g	h	k m n	p q	Hollow shaft dimension				Hollow shaft dimension			Torque arm form			H L_1 L_2	N Q J
						d_1 d_2	l_1 l_2 l_3	l_4 l_5 l_6	s_1 t_1 u_1	d_3 d_4	l_7 l_8	s_2 t_2 u_2	g_1 g_2 g_3	g_4 g_5 h_1	d_5 r s_3		
JRTSA49..	60	92	100	20	12	Φ1.250inH7	63	60	7/16-14x1.00in	25^{H7}	17	M10 × 25	57.5	31	10.4 ± 0.1	179	8
JRTS..49/T..	35	117		M10		Φ45	60	0.68in	1.37in			28.3	5	$36_{-0.3}$	21	171	120
	52	67		4	M8		2.5	105	0.250in	45	105	8	20.5	130	M8 × 25	96	130
JRTSA59..	60	100	112	20	12	Φ1.375inH7	78	75	1/2-13x1.00in	30^{H7}	17	M10 × 25	72	31	10.4 ± 0.1	189	20
JRTS..59/T..	58.5	146		M10		Φ50	75	0.67in	1.53in			33.3	5	$36_{-0.3}$	21	187	120
	58.5	73		4	M8		3	132	0.3125in	50	132	8	18.5	160	M8 × 25	107	120
JRTSA69..	88	124	140	25	20	Φ1.500inH7	87	84	5/8-11x1.75in	40^{H7}	29	M16 × 40	80.5	31	10.4 ± 0.1	236	22
JRTS..69/T..	71.5	192		M12		Φ65	84	1.40in	1.67in			43.3	10	$36_{-0.3}$	21	240	160
	80.5	100.5		5	M12		3.5	144	0.375in	65	144	12	19.5	200	M12 × 35	135	155
JRTSA79..	102	151	180	32	20	Φ2.000inH7	108	105	5/8-11x1.75in	50^{H7}	32	M16 × 45	101	54	16.4 ± 0.08	301	34
JRTS..79/T..	85	200		M16		Φ80	105	1.19in	2.24in			53.8	10	$60_{-0.3}$	30	287	200
	85	100		6	M12		4	180	0.500in	80	183	14	32.5	250	M12 × 35	162	178
JRTSA89..	118	191	225	32	26	Φ2.375inH7	128	125	3/4-10x2.00in	60^{H7}	36	M20 × 50	120	54	16.4 ± 0.08	366	37.5
JRTS..89/T..	115	259		M16		Φ95	125	1.42in	2.67in			64.4	10	$60_{-0.5}$	30	340	250
	110	128		6	M16		5	220	0.625in	95	220	18	25.5	310	M16 × 45	190	215
JRTSA99..	160	230	280	36	26	Φ2.750inH7	149	145	3/4-10x2.00in	70^{H7}	34	M20 × 50	140	72	25 ± 0.08	457	52
JRTS..99/T..	135	312		M20		Φ120	145	1.28in	3.05in			74.9	10	$80_{-0.5}$	40	420	300
	113	162		6	M16		5	255	0.625in	120	260	20	33	380	M16 × 50	240	260

JRTSH49..~JRTSH99..

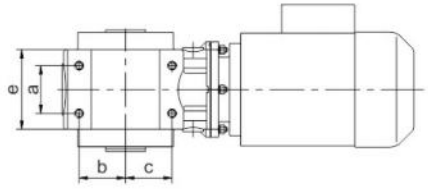

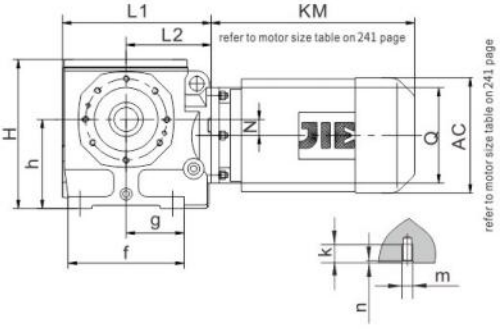

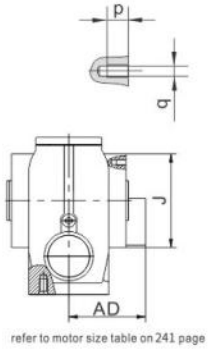

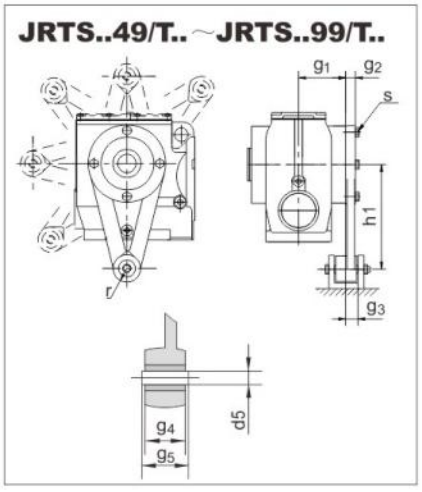

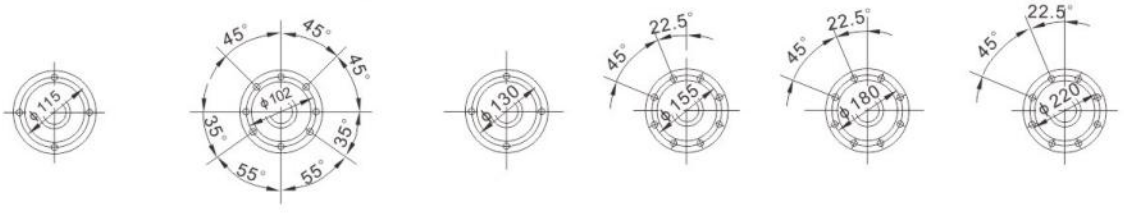

JRTSH49.. JRTSH59.. JRTSH69.. JRTSH79.. JRTSH89.. JRTSH99..

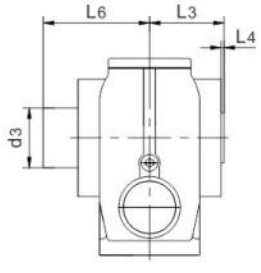

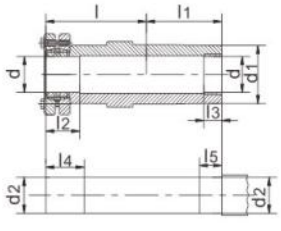

Model	a b c	e f g	h	k m n	p q	Hollow shaft dimension						Torque arm form			H L_1 L_2	L3 L4	N Q J
						l l_1	l_2 l_3	l_4 l_5	L_6 d	d_1 d_2	d_3	g_1 g_2 g_3	g_4 g_5 h_1	d_5 r s_3			
JRTSH49.. JRTS..49/T..	60 35 52	92 117 67	100	20 M10 4	12 M8	86 60	31 20	36 25	104 30H7	45 30h6	80	57.5 5 20.5	31 $36_{-0.3}$ 130	10.4 ± 0.1 21 M8 × 25	179 171 96	60 2.5	8 120 130
JRTSH59.. JRTS..59/T..	60 58.5 58.5	100 146 73	112	20 M10 4	12 M8	102 75	32 20	37 25	121 35H7	50 35h6	88	72 5 18.5	31 $36_{-0.3}$ 160	10.4 ± 0.1 21 M8 × 25	189 187 107	75 2.5	20 120 120
JRTSH69.. JRTS..69/T..	88 71.5 80.5	124 192 100.5	140	25 M12 5	20 M12	112 84	38 20	43 25	136 40H7	65 40h6	100	80.5 10 19.5	31 $36_{-0.3}$ 200	10.4 ± 0.1 21 M12 × 35	236 240 135	84 3.5	22 160 155
JRTSH79.. JRTS..79/T..	102 85 85	151 200 100	180	32 M16 6	20 M12	136 105	36 30	41 35	176 50H7	80 50h6	124	101 10 32.5	54 $60_{-0.3}$ 250	16.4 ± 0.08 30 M12 × 35	301 287 162	105 4	34 200 178
JRTSH89.. JRTS..89/T..	118 115 110	191 259 128	225	32 M16 6	26 M16	165 125	40 40	45 45	203 65H7	95 65h6	165	120 10 25.5	54 $60_{-0.5}$ 310	16.4 ± 0.08 30 M16 × 45	366 340 190	125 5	375 250 215
JRTSH99.. JRTS..99/T..	160 135 113	230 312 162	280	36 M20 6	26 M16	190 145	55 50	60 55	224 75H7	120 75h6	200	140 10 33	72 $80_{-0.5}$ 380	25 ± 0.08 40 M16 × 50	457 420 240	146 5	52 300 260

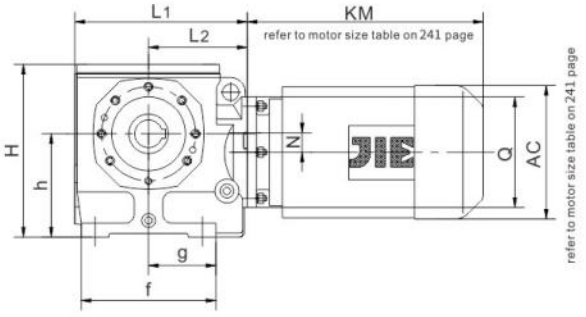

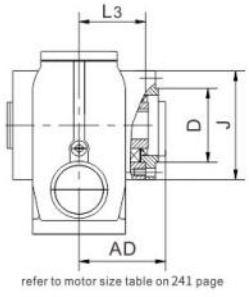

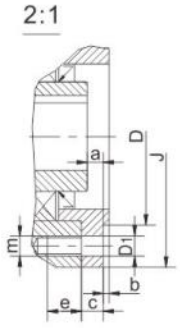

JRTSAZ49..~JRTSAZ99..

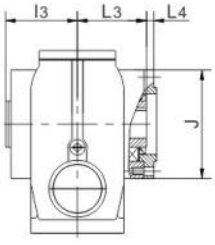

JRTSHZ49..~JRTSHZ99..

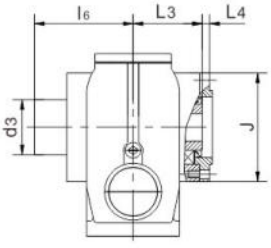

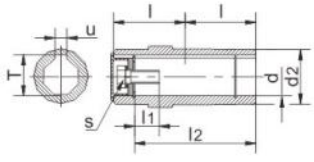

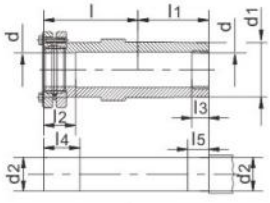



JRTS..Z49.. JRTS..Z59.. JRTS..Z69.. JRTS..Z79.. JRTS..Z89.. JRTS..Z99..

Model	a b c	e f g	h m	D D1	l	l1	l2	l3	l4	l5	l6	d	d1	d2	d3	u	u1	T	T1	S	S1	H L1 L2	L3 L4	N Q J
JRTSAZ49 JRTSHZ49	8.5 3 11	12 117 67	100 M8	95j6 9	60 86	0.67in 60	105 31	63 20	- 36	- 25	- 104	Φ1.250inH7 Φ30mmH7	25H7 45	45 30h6	- 80	0.250in —	8 -	1.37in —	28.3 -	7/16-14x1.00in —	M10 × 25 -	179 171 96	60 8.5	8 120 130
JRTSAZ59 JRTSHZ59	8 3 11	12 146 73	112 M8	80j6 9	75 102	0.87in 75	132 32	78 20	- 37	- 25	- 121	Φ1.375inH7 Φ35mmH7	30H7 50	50 35h6	- 88	0.3125in —	8 -	1.53in —	33.3 -	1/2-13x1.00in —	M10 × 25 -	189 187 107	75 8	20 120 120
JRTSAZ69 JRTSHZ69	9.5 3.5 13	20 192 100.5	140 M12	105j6 13.5	84 112	1.14in 84	144 38	87 20	- 43	- 25	- 136	Φ1.500inH7 Φ40mmH7	40H7 65	65 40h6	- 100	0.375in —	12 -	1.67in —	43.3 -	5/8-11x1.75in —	M16 × 40 -	236 240 135	84 9.5	22 160 155
JRTSAZ79 JRTSHZ79	14.5 4 14	18.5 200 100	180 M12	125j6 13.5	105 136	1.46in 105	180 36	108 30	- 41	- 35	- 176	Φ2.000inH7 Φ50mmH7	50H7 80	80 50h6	- 124	0.500in —	14 -	2.24in —	53.8 -	5/8-11x1.75in —	M16 × 45 -	301 287 162	105 14.5	34 200 178
JRTSAZ89 JRTSHZ89	18.5 5 13.5	23.5 259 128	225 M16	150j6 17.5	125 165	1.42in 125	220 40	128 40	- 45	- 45	- 203	Φ2.375inH7 Φ65mmH7	60H7 95	95 65h6	- 165	0.625in —	18 -	2.67in —	64.4 -	3/4-10x2.00in —	M20 × 50 -	366 340 190	125 18.5	37.5 250 215
JRTSAZ99 JRTSHZ99	18.5 5 13.5	23.5 312 162	280 M16	180j6 17.5	145 190	1.61in 145	255 55	149 50	- 60	- 55	- 224	Φ2.750inH7 Φ75mmH7	70H7 120	120 75h6	- 200	0.625in —	20 -	3.05in —	74.9 -	3/4-10x2.00in —	M20 × 50 -	457 420 240	145 18.5	52 300 260

JRTS..AD..

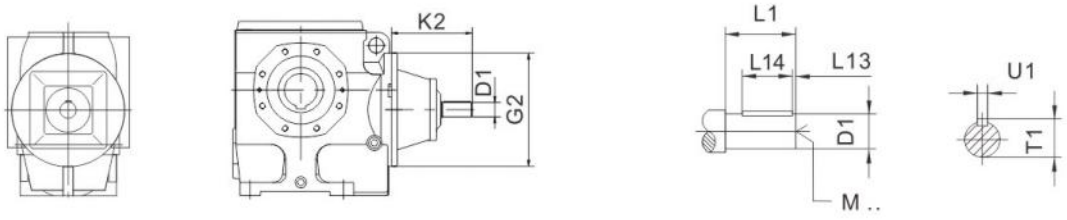

		G2	K2	D1	L1	L13	L14	T1	U1	M
JRTS..39 JRTS..49 JRTS..59	AD1	120	102	0.625in	40	4	32	0.70in	0.1875in	1/4-20x0.63
	AD2		130	0.750in	40	4	32	0.83in	0.1875in	1/4-20x0.63
JRTS..69	AD2	160	123	0.750in	40	4	32	0.83in	0.1875in	1/4-20x0.63
	AD3		159	0.875in	50	5	40	0.96in	0.1875in	5/16-18x0.87
JRTS..79	AD2	200	116	0.750in	40	4	32	0.83in	0.1875in	1/4-20x0.63
	AD3		151	0.875in	50	5	40	0.96in	0.1875in	5/16-18x0.87
	AD4		224	1.375in	80	5	70	1.51in	0.3125in	1/2-13x1.12
JRTS..89	AD2	250	111	0.750in	40	4	32	0.83in	0.1875in	1/4-20x0.63
	AD3		156	0.875in	60	5	50	0.96in	0.1875in	5/16-18x0.87
	AD4		219	1.375in	80	5	70	1.51in	0.3125in	1/2-13x1.12
	AD5		292	1.625in	110	10	70	1.79in	0.375in	5/8-11x1.38
JRTS..99	AD3	300	151	0.875in	60	5	50	0.96in	0.1875in	5/16-18x0.87
	AD4		214	1.375in	80	5	70	1.51in	0.3125in	1/2-13x1.12
	AD5		287	1.625in	110	10	70	1.79in	0.375in	5/8-11x1.38
	AD6		327	1.875in	110	10	80	2.09in	0.50in	5/8-11x1.38

JRTS..R..

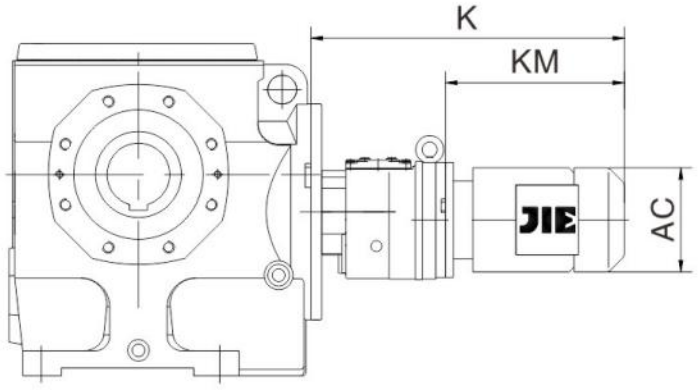

		AC	K	KM
JRTS..39R19	DN63..	120	373	198
	DN71..	135	403	228
	DN80..	156	454	279
JRTS..49R19 JRTS..59R19	DN63..	120	363	298
	DN71..	135	393	228
	DN80..	156	444	279
JRTS..69R39	DN63..	120	363	198
	DN71..	135	393	228
	DN80..	156	444	279
	DN90..	175	516	351
JRTS..79R39	DN63..	120	355	198
	DN71..	135	385	228
	DN80..	156	436	279
	DN90..	175	508	351
JRTS..89R59	DN63..	120	408	192
	DN71..	135	437	221
	DN80..	156	488	272
	DN90..	175	500	284
	DN100..	198	575	359
JRTS..99R59	DN63..	120	403	192
	DN71..	135	432	221
	DN80..	156	483	272
	DN90..	175	495	284
	DN100..	198	570	359
	DN112M	221	603	392

Notes:The dimension of motor in the above table is only for reference .If you have special require, please consult us.

10. Design and Assembly Precaution

1. JRT Gear motor weights

Gear Reducer weights

Gear reducer size	lb
JRTRX59	19.8
JRTRXF59	24.3
JRTRX69	26.5
JRTRXF69	35.3
JRTRX79	44.1
JRTRXF79	52.9
JRTRX89	77.2
JRTRXF89	88.2
JRTRX99	103.1
JRTRXF99	145.5
JRTRX109	194
JRTRXF109	227.1

Gear reducer size	lb
JRTR..29	8.8
JRTR..29F	8.8
JRTR..39	22.0
JRTR..39F	26.5
JRTR..49	30.9
JRTR..49F	37.5
JRTR..59	44.1
JRTR..59F	52.9
JRTR..69	55.1
JRTR..69F	63.9
JRTR..79	66.1
JRTR..79F	79.4

Gear reducer size	lb
JRTR..89	121.3
JRTR..89F	138.9
JRTR..99	220.5
JRTR..99F	260.1
JRTR..109	286.6
JRTRF..109	361.6
JRTR..139	518.1
JRTRF..139	604.1
JRTR..149	793.7
JRTRF..149	848.8
JRTR..169	1333.8
JRTRF..169	1466.1

Gear reducer size	lb
JRTF29	14.3
JRTFA29	13.2
JRTFF29	17.6
JRTFAF29	15.4
JRTF39	28.7
JRTFA39	26.5
JRTFF39	33.1
JRTFAF39	30.9
JRTF49	39.7
JRTFA49	37.5
JRTFF49	46.3
JRTFAF49	44.1

Gear reducer size	lb
JRTF59	55.1
JRTFA59	52.9
JRTFF59	68.3
JRTFAF59	66.1
JRTF69	68.3
JRTFA69	59.5
JRTFF69	81.6
JRTFAF69	77.2
JRTF79	121.3
JRTFA79	110.2
JRTFF79	145.5
JRTFAF79	127.9

Gear reducer size	lb
JRTF89	211.6
JRTFA89	198.4
JRTFF89	246.9
JRTFAF89	231.5
JRTF99	346.1
JRTFA99	330.7
JRTFF99	418.9
JRTFAF99	377.0
JRTF109	531.3
JRTFA109	496.0
JRTFF109	593.0
JRTFAF109	540.1

Gear reducer size	lb
JRTF129	884.1
JRTFA129	804.7
JRTFF129	985.5
JRTFAF129	884.1
JRTF159	1393.3
JRTFA159	1344.8
JRTFF159	1631.4
JRTFAF159	1477.1

Gear reducer size	lb
JRTK39	26.5
JRTKF39	33.1
JRTKA39	25.4
JRTKAF39	33.1
JRTK49	41.9
JRTKF49	49.6
JRTKA49	39.7
JRTKAF49	46.3
JRTK59	52.9
JRTKF59	63.9
JRTKA59	48.5
JRTKAF59	61.7

Gear reducer size	lb
JRTK69	66.1
JRTKF69	79.4
JRTKA69	63.9
JRTKAF69	75.0
JRTK79	119.0
JRTKF79	136.7
JRTKA79	101.4
JRTKAF79	121.3
JRTK89	198.4
JRTKF89	220.5
JRTKA89	172.0
JRTKAF89	200.6

Gear reducer size	lb
JRTK99	330.7
JRTKF99	377.4
JRTKA99	286.6
JRTKAF99	343.9
JRTK109	573.2
JRTKF109	597.5
JRTKA109	509.3
JRTKAF109	584.2
JRTK129	903.9
JRTKF129	996.5
JRTKA129	840.0
JRTKAF129	923.7

Gear Reducer weights






Gear reducer size	lb	Gear reducer size	lb	Gear reducer size	lb	Gear reducer size	lb	Motor size	lb
JRTK159	1399.9	JRTS39	13.2	JRTS69	55.1	JRTS99	308.6	DN63S2	13.2
JRTKF159	1576.3	JRTSF39	17.6	JRTSF69	70.5	JRTSF99	377.0	DN63M2	15.0
JRTKA159	1329.4	JRTSA39	13.2	JRTSA69	57.3	JRTSA99	297.6	DN71S2	17.2
JRTKAF159	1455.1	JRTSAF39	16.5	JRTSAF69	68.3	JRTSAF99	352.7	DN71M2	20.7
JRTK169	2281.8	JRTS49	22.0	JRTS79	99.2			DN80S2	27.1
JRTKH169	2204.6	JRTSF49	30.9	JRTSF79	121.3			DN80M2	33.1
JRTK189	3560.5	JRTSA49	24.3	JRTSA79	99.2			DN90S2	43.7
JRTKH189	3417.2	JRTSAF49	28.7	JRTSAF79	114.6			DN90L2	51.1
		JRTS59	30.9	JRTS89	176.4			DN100L2	72.8
		JRTSF59	39.7	JRTSF89	222.7			DN112M2	104.1
		JRTSA59	30.9	JRTSA89	167.6			DN132S2	114.6
		JRTSAF59	37.5	JRTSAF89	207.2			DN132M2	116.8

Motorweights

Motor size	lb	Motor size	lb	Motor size	lb	Motor size	lb	Motor size	lb
DN160M2	253.5	DN71M4	20.7	DN160L4	313.1	DN80M6	33.1	DN200L6	617.3
DN160L2	257.9	DN80S4	27.1	DN180M4	399.0	DN90S6	43.7	DN200H6	623.9
DN160H2	286.6	DN80M4	33.1	DN180L4	460.8	DN90M6	43.7	DN225M6	683.4
DN180M2	341.7	DN90S4	43.7	DN200L4	628.3	DN90L6	51.1	DN250M6	1014.1
DN200L2	617.3	DN90L4	51.1	DN225S4	723.1	DN100L6	72.8	DN280S6	1146.4
DN225M2	712.1	DN100S4	60.8	DN225M4	800.3	DN112M6	104.1		
DN250M2	1014.1	DN100L4	72.8	DN250M4	974.4	DN132S6	114.6		
DN280S2	1203.7	DN112M4	104.1	DN280S4	1254.4	DN132M6	116.8		
DN280M2	1388.9	DN132S4	114.6	DN280M4	1408.8	DN132L6	201.1		
DN63S4	13.2	DN132M4	194.0	DN63M6	14.6	DN160M6	253.5		
DN63M4	15.0	DN132L4	201.1	DN71S6	17.2	DN160L6	251.3		
DN71S4	17.2	DN160M4	266.8	DN71M6	20.7	DN180L6	434.3		

Notes: The weight of reducers in the table is the average weight for each ratio. If you need exact weight for certain ratio or input output modules, please consult our company.

2. Input module suitable for IEC motors

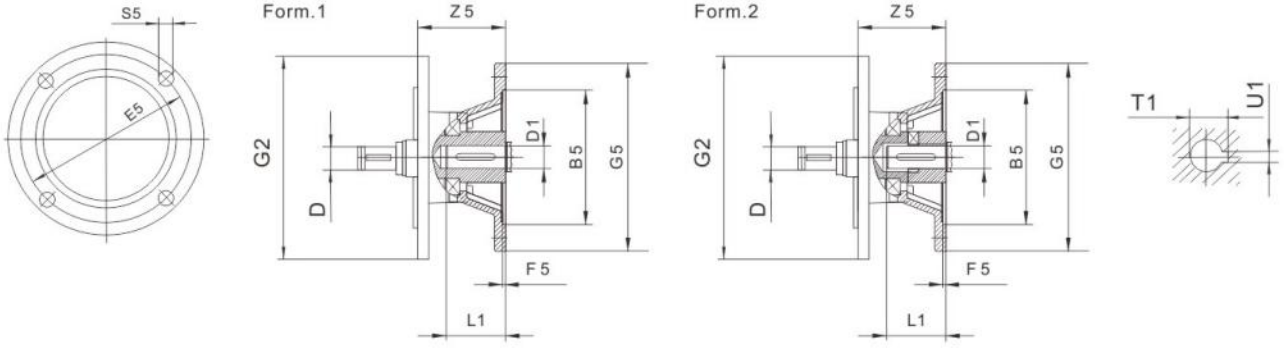

Gear unit type	Motor adaptor	Form	B5	D	E5	F5	G2	G5	S5	Z5	D1	L1	T1	U1	weight lb
JRTR..29,JRTR..39 JRTF..39,JRTF..49 JRTK..39 JRTS..39,JRTS..49, JRTS..59	AM63	1	95G7	10n6	115	4.5	120	140	M8	72	11F7	23	12.8	4	12.6
	AM71[1)]		110G7		130			160		92.5	14F7	30	16.3	5	8.8
	AM80[1)]		130G7	12n6	165			200	M10	118	19F7	40	21.8	6	12.1
	AM90[1)]			14n6							24F7	50	27.3	8	13.9
JRTR..49,JRTR..59, JRTR..69 JRTF..59,JRTF..69 JRTK..49,JRTK..59, JRTK..69 JRTS..69	AM63	1	95G7	10n6	115	4.5	160	140	M8	66	11F7	23	12.8	4	13.4
	AM71		110G7		130			160		87	14F7	30	16.3	5	13.2
	AM80		130G7	12n6	165			200	M10	113	19F7	40	21.8	6	22
	AM90			14n6							24F7	50	27.3	8	22
	AM100[1)]	2	180G7	16n6	215	5		250	M12	144	28H7	60	31.3	8	24.5
	AM112[1)]			18n6											24.5
	AM132[1)]		230G7	22n6	265			300		177	38H7	80	41.3	10	44.1
JRTR..79 JRTF..79 JRTK..79 JRTS..79	AM63	1	95G7	10n6	115	4.5	200	140	M8	60	11F7	23	12.8	4	17.9
	AM71		110G7		130			160			14F7	30	16.3	5	19.4
	AM80		130G7	12n6	165			200	M10	92	19F7	40	21.8	6	25.6
	AM90			14n6							24F7	50	27.3	8	25.6
	AM100[1)]	2	180G7	16n6	215	5		250	M12	136	28H7	60	31.3	8	27.8
	AM112[1)]			18n6											27.8
	AM132S[1)] AM132M[1)]		230G7	22n6	265			300		196	38H7	80	41.3	10	55.3 55.3
	AM132ML[1)]			28n6											55.3
JRTR..89 JRTF..89 JRTK..89 JRTS..89	AM80	1	130G7	12n6	165	4.5	250	200	M10	100	19F7	40	21.8	6	39.2
	AM90			14n6							24F7	50	27.3	8	39.2
	AM100	2	180G7	16n6	215	5		250	M12	131	28H7	60	31.3	8	41.7
	AM112			18n6											41.7
	AM132S AM132M		230G7	22n6	265			300		191	38H7	80	41.3	10	61.1 61.1
	AM132ML			28n6											61.1
	AM160[1)]		250G7	28n6	300	6		350	M16	236	42H7	110	45.3	12	89.7
	AM180[1)]			32n6							48H7		51.8	14	96.3

Flg.1

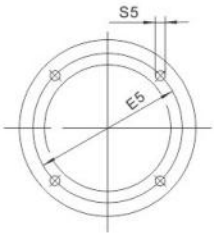

Form.1

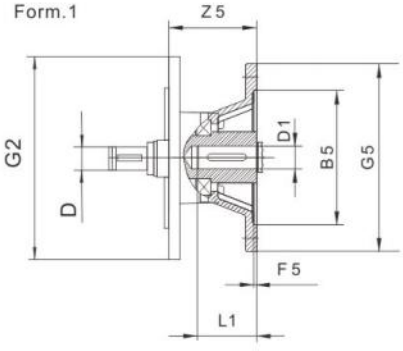

Form.2

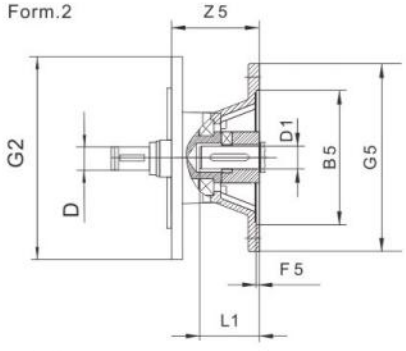

Flg.2

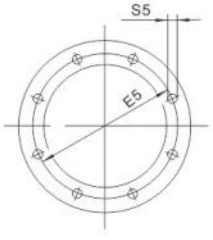

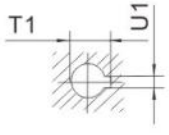

Gear unit type	Motor adaptor	Fig	Form	B5	D	E5	F5	G2	G5	S5	Z5	D1	L1	T1	U1	weight lb
JRTR..99 JRTF..99 JRTK..99 JRTS..99	AM100	1	2	180 G7	16n6	215	5	300	250	M12	126	28H7	60	31.3	8	41.9
	AM112				18n6											41.9
	AM132S			230 G7	22n6	265			300		186	38H7	80	41.3	10	72.8
	AM132M															72.8
	AM132ML				28n6											72.8
	AM160			250 G7	28n6	300	6		350	M16	231	42H7	110	45.3	12	106.9
	AM180				32n6							48H7		51.8	14	99.2
	AM200		1	300 G7	38n6	350	7		400		268	55F7		59.3	16	127.9
	AM225[1)]	2	2	350 G7	38n6	400	6		450		303	60H7	140	64.4	18	136.7
JRTR..109 JRTF..109 JRTK..109	AM100	1	2	180 G7	16n6	215	5	350	250	M12	120	28H7	60	31.3	8	48.5
	AM112				18n6											48.5
	AM132S			230 G7	22n6	265			300		180	38H7	80	41.3	10	82
	AM132M															82
	AM132ML				28n6											82
	AM160			250 G7	28n6	300	6		350	M16	225	42H7	110	45.3	12	116.4
	AM180				32n6							48H7		51.8	14	123
	AM200		1	300 G7	38n6	350	7		400		262	55F7		59.3	16	145.5
	AM225	2	2	350 G7	38n6	400	6		450		297	60H7	140	64.4	18	147.7
JRTR..139	AM132S	1	2	230 G7	22n6	265	5	400	300	M12	173	38H7	80	41.3	10	106.3
	AM132M															106.3
	AM132ML				28n6											106.3
	AM160			250 G7	28n6	300	6		350	M16	218	42H7	110	45.3	12	141.5
	AM180				32n6							48H7		51.8	14	134.5
	AM200		1	300 G7	38n6	350	7		400		255	55F7		59.3	16	156.5
	AM225	2	2	350 G7	38n6	400	6		450		290	60H7	140	64.4	18	149.9

Flg.1

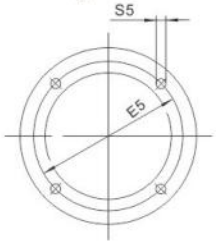

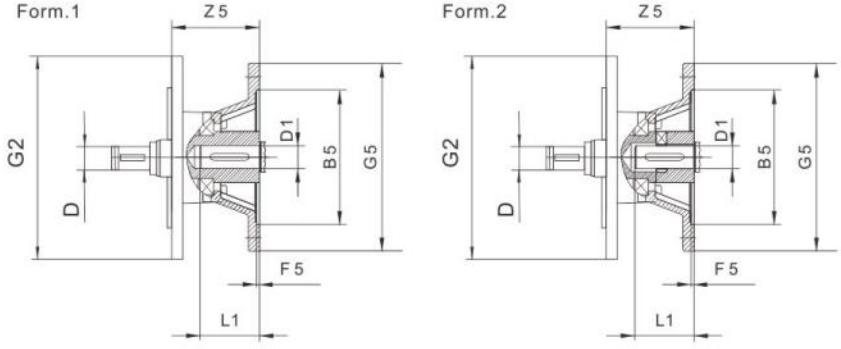

Flg.2

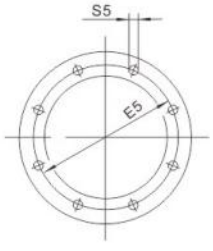

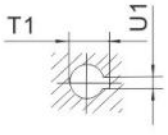

Gear unit type	Motor adaptor	Fig.	Form	B5	D	E5	F5	G2	G5	S5	Z5	D1	L1	T1	U1	weight lb
JRTR..149 JRTF..129 JRTK..129	AM132S	1	2	230G7	22n6	265	5	450	300	M12	165	38H7	80	41.3	10	128.5
	AM132M															128.5
	AM132ML				28n6											128.5
	AM160			250G7	28n6	300	6		350	M16	210	42H7	110	45.3	12	157.2
	AM180				32n6							48H7		51.8	14	149.9
	AM200		1	300G7	38n6	350	7		400		247	55F7		59.3	16	189.2
	AM225	2	2	350G7	38n6	400			450		282	60H7	140	64.4	18	172
	AM250			450G7	48n6	500			550		336	65H7		69.4		263.5
	AM280											75H7		79.9	20	263.9
JRTR..169 JRTF..159 JRTK..159 JRTK..169 JRTK..189	AM132	1	2	230G7	32n6	265	5	550	300	M12	165	38H7	80	41.3	10	154.3
	AM160			250G7	28n6	300	6		350	M16	202	42H7	110	45.3	12	194.9
	AM180				32n6							48H7		51.8	14	189.6
	AM200		1	300G7	38n6	350	7		400		239	55F7		59.3	16	226.9
	AM225	2	2	350G7	38n6	400			450		274	60H7	140	64.4	18	209.4
	AM250			450G7	48n6	500			550		328	65H7		69.4		286.6
	AM280											75H7		79.9	20	304.2

Dimension 1/2 G5 may protrude past foot mounting surface if mounted on R.K or S foot-mounted gear unit,Please check.

3. Servomotor Adapters

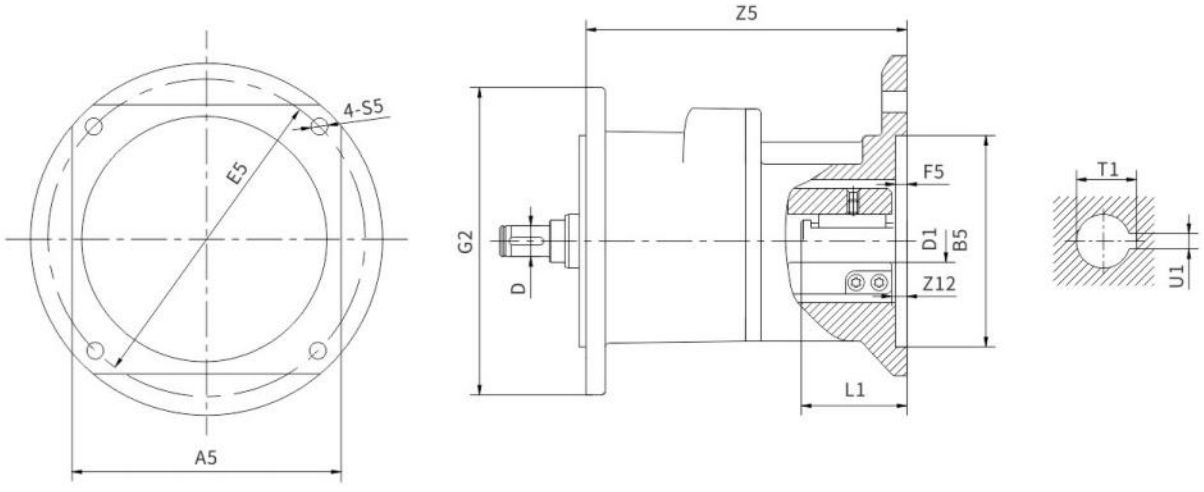

Gear unit type	Motor adaptor	A5	B5	D	E5	F5	G2	Z12	S5	D1	L1	T1	U1	Z5	weight lb
JRTR..29 JRTR..39 JRTF..39 JRTF..49 JRTK..39 JRTS..39 JRTS..49 JRTS..59	AQS80/1	□82	Φ60G7	Φ10 Φ12 Φ14 Φ16	Φ75 Φ95 Φ90	5	Φ120	6	Φ7	Φ11F7	40	12.8	4	127.5	5.7
	AQS80/2									Φ14F7		16.3	5		
	AQS80/3		Φ50G7									16.3			
	AQS80/4		Φ70G7									16.3			
	AQS80/5									Φ16F7		18.3			
	AQS80/6									Φ19F7		21.8	6		
	AQS100/1	□100	Φ80G7	Φ10 Φ12 Φ14 Φ16	Φ100 Φ115	6		7	Φ7	Φ14F7	45	16.3	5	138.5	9
	AQS100/2									Φ19F7		21.8	6		
	AQS100/3		Φ95G7						Φ9	Φ14F7		16.3	5		
	AQS100/4									Φ19F7		21.8	6		
	AQS100/5									Φ20F7		22.8	6		
	AQS100/6									Φ22F7		25.3	8		
	AQS115/1	□115	Φ95G7	Φ10 Φ12 Φ14 Φ16	Φ130	6		7	Φ9	Φ19F7	50	21.8	6	162.5	13.7
	AQS115/2		Φ110G7												
	AQS115/3									Φ24F7		27.3	8		
	AQS120/1	□120	Φ110G7	Φ12 Φ14 Φ16	Φ145	6		7	Φ9	Φ16F7	40	18.3	5	162.5	14.1
	AQS120/2									Φ19F7		21.8	6		
	AQS130/1	□130	Φ110G7	Φ14 Φ16	Φ145	7		8	Φ9	Φ28F7	55	31.3	8	172.5	15.4
	AQS130/2									Φ24F7		27.3			
	AQS130/3									Φ22F7		25.3			
	AQS130/4											24.8	6		
	AQS140/1	□140	Φ110G7	Φ14 Φ16	Φ165	7		8	Φ11	Φ24F7	60	27.3	8	172.5	18.7
	AQS140/2		Φ130G7												
	AQS140/3									Φ32F7		35.3	10		

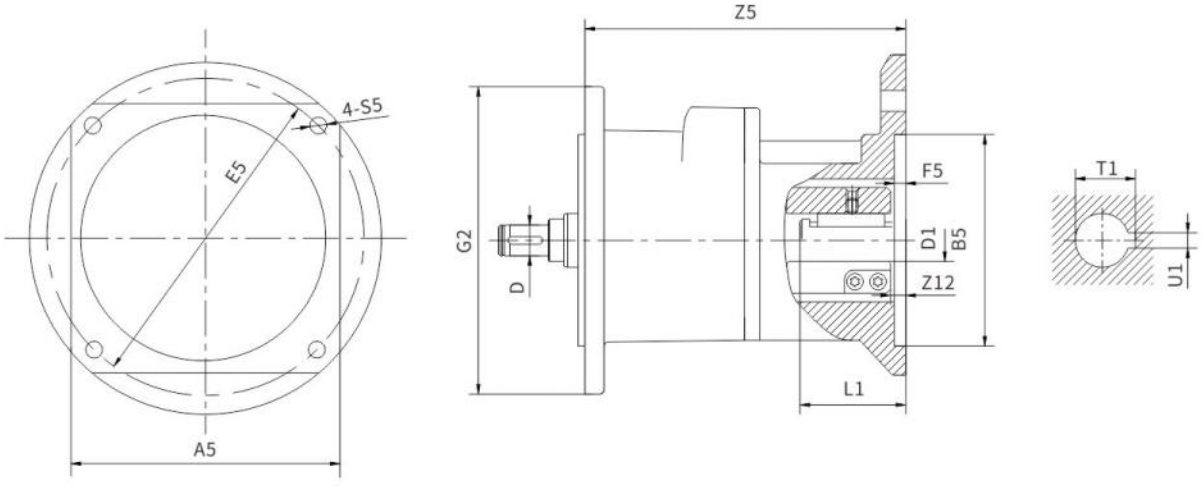

Gear unit type	Motor adaptor	A5	B5	D	E5	F5	G2	Z12	S5	D1	L1	T1	U1	Z5	weight lb
	AQS80/1		Φ60G7	Φ10	Φ75					Φ11F7		12.8	4		
	AQS80/2									Φ14F7		16.3	5		
	AQS80/3	□82	Φ50G7	Φ12	Φ95	5		6	Φ7		40	16.3		122	7.9
	AQS80/4		Φ70G7	Φ14	Φ90							16.3			
	AQS80/5			Φ16						Φ16F7		18.3			
	AQS80/6									Φ19F7		21.8	6		
JRTR..49	AQS100/1		Φ80G7	Φ10	Φ100				Φ7	Φ14F7		16.3	5		
JRTR..59	AQS100/2									Φ19F7		21.8	6		
JRTR..69	AQS100/3			Φ12						Φ14F7		16.3	5		
JRTF..59	AQS100/4	□100	Φ95G7	Φ14	Φ115	6		7	Φ9	Φ19F7	45	21.8	6	133	12.6
JRTF..69	AQS100/5			Φ16						Φ20F7		22.8	6		
	AQS100/6						Φ160			Φ22F7		25.3	8		
JRTK..49	AQS115/1		Φ95G7	Φ10	Φ130	6		7	Φ9	Φ19F7	50	21.8	6	157	18.7
JRTK..59	AQS115/2	□115	Φ110G7	Φ12 Φ14											
JRTK..69	AQS115/3			Φ16						Φ24F7		27.3	8		
JRTS..69	AQS120/1	□120	Φ110G7	Φ12 Φ14	Φ145	6		7	Φ9	Φ16F7	40	18.3	5	157	19.2
	AQS120/2			Φ16 Φ18						Φ19F7		21.8	6		
JRTRX..59	AQS130/1			Φ14	Φ145	7		8	Φ9	Φ28F7	55	31.3	8	167	20.5
JRTRX..69	AQS130/2	□130	Φ110G7	Φ16						Φ24F7		27.3			
	AQS130/3			Φ18						Φ22F7		25.3			
	AQS130/4											24.8	6		
	AQS140/1		Φ110G7	Φ14	Φ165	7		8	Φ11	Φ24F7	60	27.3	8	167	21.6
	AQS140/2	□140	Φ130G7	Φ16											
	AQS140/3			Φ18						Φ32F7		35.3	10		

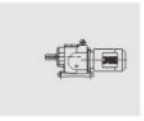
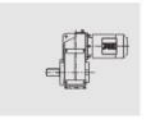



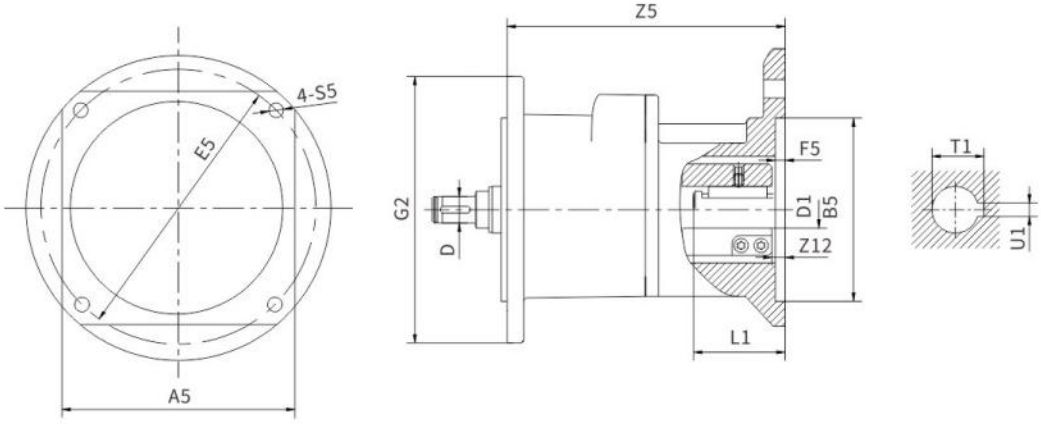

Gear unit type	Motor adaptor	A5	B5	D	E5	F5	G2	Z12	S5	D1	L1	T1	U1	Z5	weight lb
JRTR..89 JRTF..89 JRTK..89 JRTS..89 JRTRX..89	AQS80/1	□82	Φ60G7	Φ12 Φ14 Φ16	Φ75	5	Φ250	6	Φ7	Φ11F7	40	12.8	4	109	15.2
	AQS80/2									Φ14F7		16.3	5		
	AQS80/3		Φ50G7		Φ95							16.3			
	AQS80/4		Φ70G7		Φ90							16.3			
	AQS80/5									Φ16F7		18.3			
	AQS80/6									Φ19F7		21.8	6		
	AQS100/1	□100	Φ80G7	Φ12 Φ14 Φ16	Φ100	6		7	Φ7	Φ14F7	45	16.3	5	120	19.8
	AQS100/2									Φ19F7		21.8	6		
	AQS100/3		Φ95G7		Φ115				Φ9	Φ14F7		16.3	5		
	AQS100/4									Φ19F7		21.8	6		
	AQS100/5									Φ20F7		22.8	6		
	AQS100/6									Φ22F7		25.3	8		
	AQS115/1	□115	Φ95G7	Φ12 Φ14 Φ16 Φ18	Φ130	6		7	Φ9	Φ19F7	50	21.8	6	144	25.8
	AQS115/2		Φ110G7												
	AQS115/3									Φ24F7		27.3	8		
	AQS120/1	□120	Φ110G7	Φ12 Φ14 Φ16 Φ18	Φ145	6		7	Φ9	Φ16F7	40	18.3	5	144	26.2
	AQS120/2									Φ19F7		21.8	6		
	AQS130/1	□130	Φ110G7	Φ14 Φ16 Φ18 Φ22	Φ145	7		8	Φ9	Φ28F7	55	31.3	8	154	27.6
	AQS130/2									Φ24F7		27.3			
	AQS130/3									Φ22F7		25.3			
	AQS130/4											24.8	6		
	AQS140/1	□140	Φ110G7	Φ14 Φ16 Φ18 Φ22	Φ165	7		8	Φ11	Φ24F7	60	27.3	8	154	28.7
	AQS140/2		Φ130G7												
	AQS140/3									Φ32F7		35.3	10		
	AQS180/1	□180	Φ114.3G7	Φ18 Φ22 Φ28	Φ200	7		8	Φ13.5	Φ35F7	80	38.3	10	220	51.4
	AQS180/2									Φ42F7	110	45.3	12	260	54.5
	AQS190/1	□190	Φ130G7	Φ18 Φ22 Φ28	Φ215	7		8	Φ13.5	Φ32F7	60	35.3	10	220	51.8
	AQS190/2		Φ180G7												
	AQS190/3									Φ38F7	80	41.3			
	AQS220/1	□220	Φ200G7	Φ18 Φ22 Φ28 Φ32	Φ235	7		8	Φ13.5	Φ28F7	55	31.3	8	220	55.6
	AQS220/2									Φ32F7	65	35.3	10		
	AQS220/3									Φ42F7	120	45.3	12	260	58.9
	AQS260/1	□260	Φ250G7	Φ22 Φ28 Φ32	Φ300	7		8	Φ17.5	Φ42F7	110	45.3	12	260	65.7

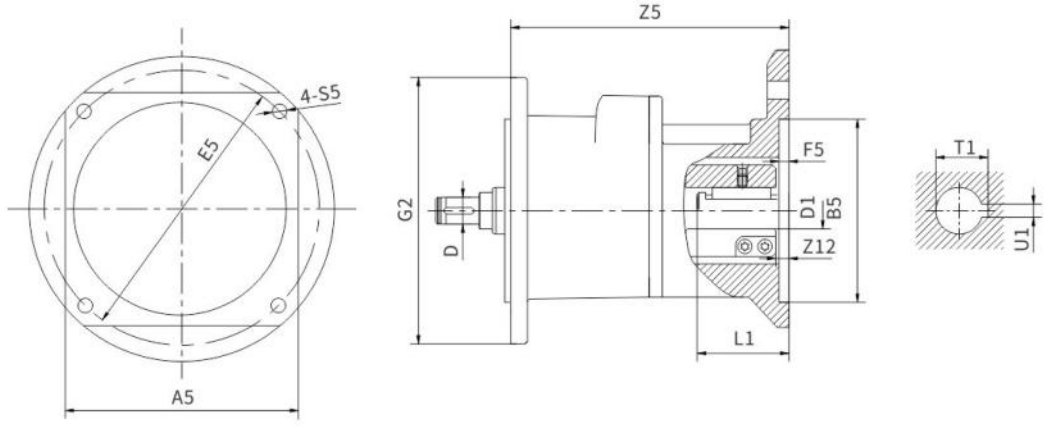

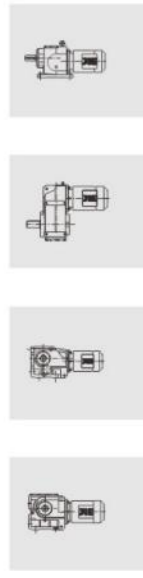

Gear unit type	Motor adaptor	A5	B5	D	E5	F5	G2	Z12	S5	D1	L1	T1	U1	Z5	weight lb
JRTR..79 JRTF..79 JRTK..79 JRTS..79 JRTRX..79	AQS80/1	□82	Φ60G7	Φ10	Φ75	5	Φ200	6	Φ7	Φ11F7	40	12.8	4	114	11.2
	AQS80/2									Φ14F7		16.3	5		
	AQS80/3		Φ50G7	Φ12	Φ95							16.3			
	AQS80/4		Φ70G7	Φ14	Φ90							16.3			
	AQS80/5									Φ16F7		18.3			
	AQS80/6			Φ16						Φ19F7		21.8	6		
	AQS100/1	□100	Φ80G7	Φ10	Φ100	6		7	Φ7	Φ14F7	45	16.3	5	125	16.1
	AQS100/2									Φ19F7		21.8	6		
	AQS100/3		Φ95G7	Φ12	Φ115				Φ9	Φ14F7		16.3	5		
	AQS100/4			Φ14						Φ19F7		21.8	6		
	AQS100/5									Φ20F7		22.8	6		
	AQS100/6			Φ16						Φ22F7		25.3	8		
	AQS115/1	□115	Φ95G7	Φ12 Φ14 Φ16 Φ18	Φ130	6		7	Φ9	Φ19F7	50	21.8	6	149	21.2
	AQS115/2		Φ110G7												
	AQS115/3									Φ24F7		27.3	8		
	AQS120/1	□120	Φ110G7	Φ12 Φ14 Φ16 Φ18	Φ145	6		7	Φ9	Φ16F7	40	18.3	5	149	21.6
	AQS120/2									Φ19F7		21.8	6		
	AQS130/1	□130	Φ110G7	Φ14 Φ16 Φ18 Φ22	Φ145	7		8	Φ9	Φ28F7	55	31.3	8	159	22.9
	AQS130/2									Φ24F7		27.3			
	AQS130/3									Φ22F7		25.3			
	AQS130/4											24.8	6		
	AQS140/1	□140	Φ110G7	Φ14 Φ16 Φ18 Φ22	Φ165	7		8	Φ11	Φ24F7	60	27.3	8	159	24
	AQS140/2		Φ130G7												
	AQS140/3									Φ32F7		35.3	10		
	AQS180/1	□180	Φ114.3G7	Φ18 Φ22 Φ28	Φ200	7		8	Φ13.5	Φ35F7	80	38.3	10	225	45.9
	AQS180/2									Φ42F7	110	45.3	12	265	48.9
	AQS190/1	□190	Φ130G7	Φ18 Φ22 Φ28	Φ215	7		8	Φ13.5	Φ32F7	60	35.3	10	225	46.3
	AQS190/2		Φ180G7												
	AQS190/3									Φ38F7	80	41.3			
	AQS220/1	□220	Φ200G7	Φ18 Φ22 Φ28	Φ235	7		8	Φ13.5	Φ28F7	55	31.3	8	225	50
	AQS220/2									Φ32F7	65	35.3	10		
	AQS220/3									Φ42F7	120	45.3	12	265	53.4
	AQS260/1	□260	Φ250G7	Φ22 Φ28	Φ300	7		8	Φ17.5	Φ42F7	110	45.3	12	265	60.2

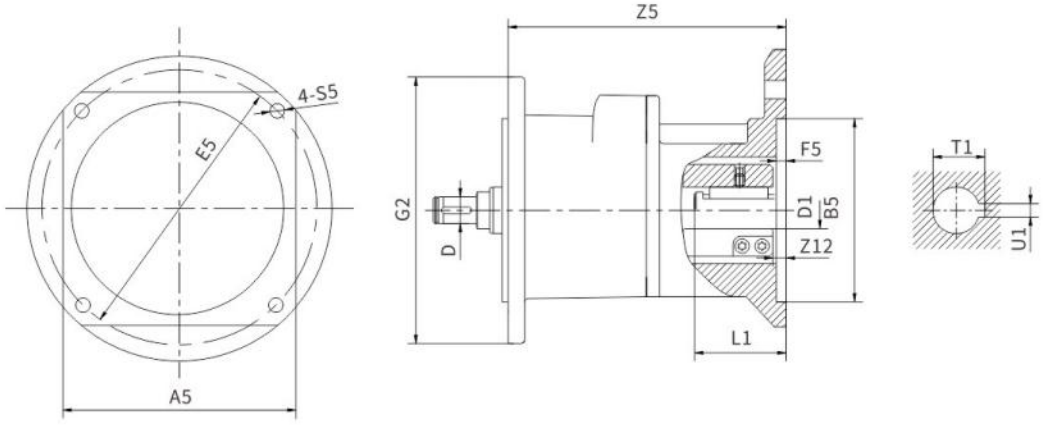

Gear unit type	Motor adaptor	A5	B5	D	E5	F5	G2	Z12	S5	D1	L1	T1	U1	Z5	weight lb
JRTR..99 JRTF..99 JRTK..99 JRTS..99 JRTRX..99	AQS115/1	□115	Φ95G7	Φ14 Φ16 Φ18	Φ130	6	Φ300	7	Φ9	Φ19F7	50	21.8	6	139	30.6
	AQS115/2		Φ110G7												
	AQS115/3									Φ24F7		27.3	8		
	AQS120/1	□120	Φ110G7	Φ14 Φ16 Φ18	Φ145	6		7	Φ9	Φ16F7	40	18.3	5	139	31.1
	AQS120/2									Φ19F7		21.8	6		
	AQS130/1	□130	Φ110G7	Φ16 Φ18 Φ22	Φ145	7		8	Φ9	Φ28F7	55	31.3	8	149	32.4
	AQS130/2									Φ24F7		27.3			
	AQS130/3									Φ22F7		25.3			
	AQS130/4											24.8	6		
	AQS140/1	□140	Φ110G7	Φ16 Φ18 Φ22	Φ165	7		8	Φ11	Φ24F7	60	27.3	8	149	33.5
	AQS140/2		Φ130G7												
	AQS140/3									Φ32F7		35.3	10		
	AQS180/1	□180	Φ114.3G7	Φ18 Φ22 Φ28	Φ200	7		8	Φ13.5	Φ35F7	80	38.3	10	215	74.3
	AQS180/2									Φ42F7	110	45.3	12	255	74.4
	AQS190/1	□190	Φ130G7	Φ18 Φ22 Φ28	Φ215	7		8	Φ13.5	Φ32F7	60	35.3	10	215	74.7
	AQS190/2		Φ180G7												
	AQS190/3									Φ38F7	80	41.3			
	AQS220/1	□220	Φ200G7	Φ18 Φ22 Φ28 Φ32	Φ235	7		8	Φ13.5	Φ28F7	55	31.3	8	215	78.5
	AQS220/2									Φ32F7	65	35.3	10		
	AQS220/3									Φ42F7	120	45.3	12	255	81.8
	AQS260/1	□260	Φ250G7	Φ22 Φ28 Φ32	Φ300	7		8	Φ17.5	Φ42F7	110	45.3	12	255	88.6

4. Input interface suitable for NEMA motors

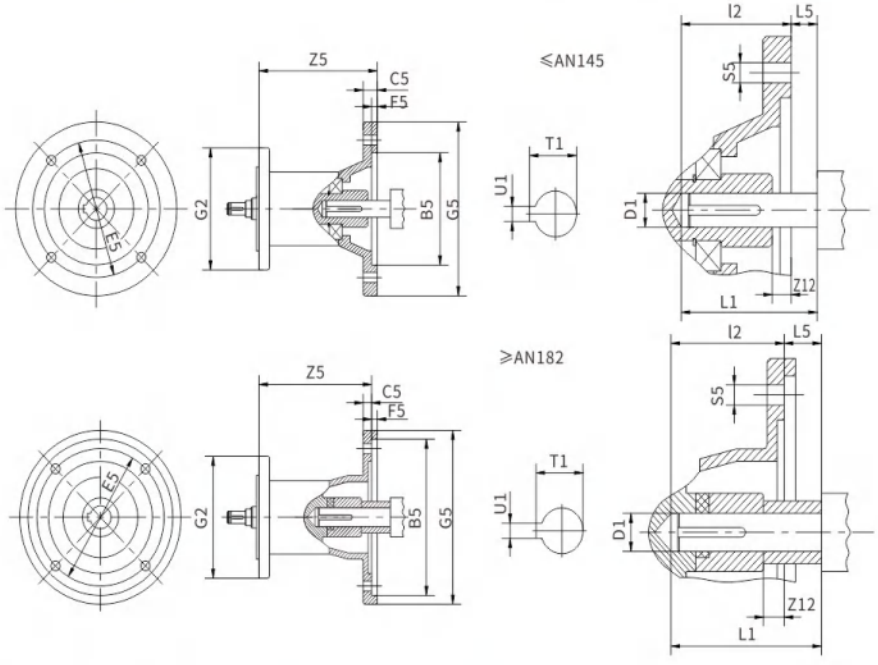

Gear unit type	Motor adaptor	B5 inch	C5 mm	E5 inch	F5 mm	G2 mm	G5 mm	I2 mm	L5 inch	S5 mm	Z5 mm	Z12 mm	D1 inch	L1 inch	T1 inch	U1 inch	weight lb
R..29 R..39	AN56	4.50	11	5.875	4.5	120	170	53	-0.19	10.5	92.5	4.8	0.625	1.90	0.71	0.188	11.0
	AN143		12					60.2	0.12		116	5.5	0.875	2.49	0.98		13.0
	AN145																13.0
R..49 R..59 R..69	AN56	4.50	11	5.875	4.5	160	170	53	-0.19	10.5	87	4.8	0.625	1.90	0.71	0.188	12.3
	AN143		12					60.2	0.12		110.5	5.5	0.875	2.49	0.98		17.6
	AN145																17.6
	AN182	8.50	10	7.25	5		228	69.5	0.12	15	142.5	13.5	1.125	2.85	1.24	0.25	23.8
	AN184																23.8
	AN213		11					82.5	0.25		164.5	9.5	1.375	3.50	1.52	0.312	34.6
R..79	AN56	4.50	11	5.875	4.5	200	170	53	-0.19	10.5	79	4.8	0.625	1.90	0.71	0.188	18.5
	AN143		12					60.2	0.12		102.5	5.5	0.875	2.49	0.98		21.2
	AN145																21.2
	AN182	8.50	10	7.25	5		228	69.5	0.12	15	134.5	13.5	1.125	2.85	1.24	0.25	27.1
	AN184																27.1
	AN213		11					86.5	0.25		183.5	9.5	1.375	3.65	1.52	0.312	50.3
R..89	AN143	4.50	12	5.875	4.5	250	170	60.2	0.12	10.5	97.5	5.5	0.875	2.49	0.98	0.188	34.8
	AN145																34.8
	AN182	8.50	10	7.25	5		228	69.5	0.12	15	129.5	13.5	1.125	2.85	1.24	0.25	41.0
	AN184																41.0
	AN213		11					86.5	0.25		178.5	9.5	1.375	3.65	1.52	0.312	56.0
	AN254		14					110	0.25		229	2.5	1.625	4.58	1.80	0.375	69.9
	AN284	10.50	15	9.00	5		286	117	0.25	15	236	4.5	1.875	4.58	2.10	0.5	85.1
R..99	AN182	8.50	10	7.25	5	300	228	69.5	0.12	15	124.5	13.5	1.125	2.85	1.24	0.25	41.2
	AN184																41.2
	AN213		11					86.5	0.25		173.5	9.5	1.375	3.65	1.52	0.312	67.7
	AN254		14					110	0.25		224	2.5	1.625	4.58	1.80	0.375	87.5
	AN284	10.50	15	9.00	5		286	117	0.25	15	231	4.5	1.875	4.85	2.10	0.5	102.7
	AN324	12.50	17	11.00	5		356	134.5	0.25	17.5	291	28.5	2.125	5.57	2.36	0.5	153.0
	AN364							146.5					2.375	6.02	2.66	0.625	153.4
R..109	AN182	8.50	10	7.25	5	350	228	69.5	0.12	15	118.5	13.5	1.125	2.85	1.24	0.25	47.8
	AN184																47.8
	AN213		11					86.5	0.25		167.5	9.5	1.375	3.65	1.52	0.312	69.7
	AN254		14					110	0.25		218	2.5	1.625	4.58	1.80	0.375	96.6
	AN284	10.50	15	9.00	5		286	117	0.25	15	225	4.5	1.875	4.85	2.10	0.5	111.8
	AN324	12.50	17	11.00	5		356	134.5	0.25	17.5	285	28.5	2.125	5.57	2.36	0.5	164.2
	AN364							146.5					2.375	6.02	2.66	0.625	164.7
R..139	AN213	8.50	11	7.25	5	400	228	86.5	0.25	15	160.5	9.5	1.375	3.65	1.52	0.312	100.3
	AN254		14					110	0.25		211	2.5	1.625	4.58	1.80	0.375	121.0
	AN284	10.50	15	9.00	5		286	117	0.25	15	218	4.5	1.875	4.85	2.10	0.5	136.2
	AN324	12.50	17	11.00	5		356	134.5	0.25	17.5	278	28.5	2.125	5.57	2.36	0.5	173.1
	AN364							146.5					2.375	6.02	2.66	0.625	173.5
R..149	AN213	8.50	11	7.25	5	450	228	86.5	0.25	15	152.5	9.5	1.375	3.65	1.52	0.312	124.3
	AN254		14					110	0.25		203	2.5	1.625	4.58	1.80	0.375	136.7
	AN284	10.50	15	9.00	5		286	117	0.25	15	210	4.5	1.875	4.85	2.10	0.5	152.1
	AN324	12.50	17	11.00	5		356	134.5	0.25	17.5	270	28.5	2.125	5.57	2.36	0.5	188.9
	AN364							146.5					2.375	6.02	2.66	0.625	189.6
R..169	AN254	8.50	14	7.25	5	550	228	110	0.25	15	195	2.5	1.625	4.58	1.80	0.375	174.4
	AN284	10.50	15	9.00	5		286	117	0.25	15	202	4.5	1.875	4.85	2.10	0.5	189.8
	AN324	12.50	17	11.00	5		356	134.5	0.25	17.5	262	28.5	2.125	5.57	2.36	0.5	226.6
	AN364							146.5					2.375	6.02	2.66	0.625	227.3

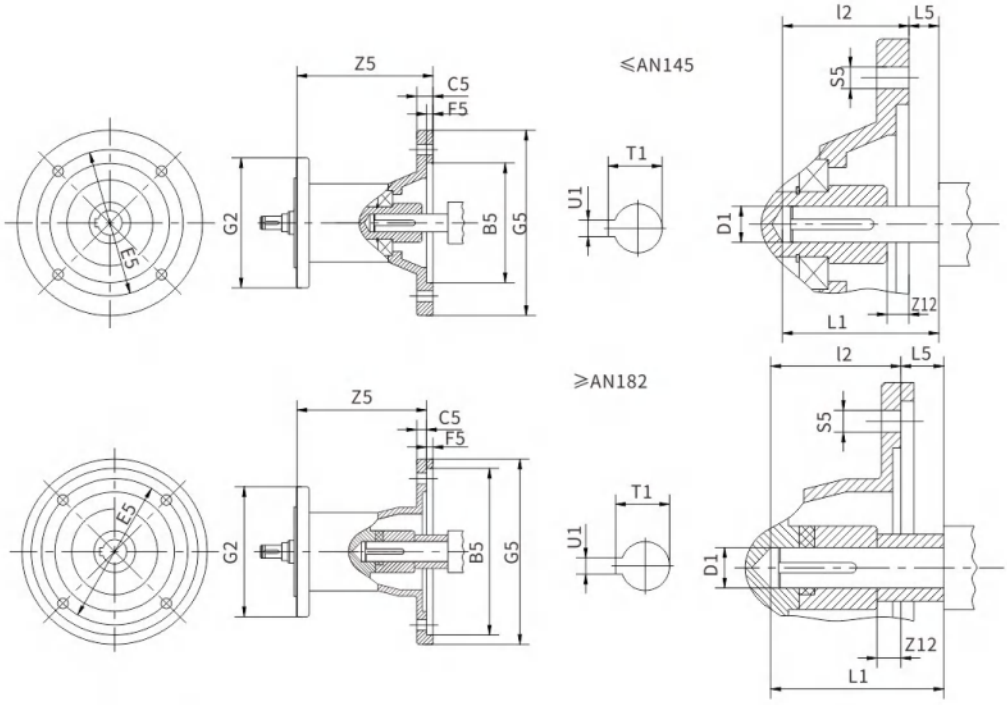

Gear unit type	Motor adaptor	B5 inch	C5 mm	E5 inch	F5 mm	G2 mm	G5 mm	l2 mm	L5 inch	S5 mm	Z5 mm	Z12 mm	D1 inch	L1 inch	T1 inch	U1 inch	weight lb
F..39	AN56	4.50	11	5.875	4.5	120	170	53	-0.19	10.5	92.5	4.8	0.625	1.90	0.71	0.188	11.0
F..49	AN143		12					60.2	0.12		116	5.5	0.875	2.49	0.98		13.0
	AN145																13.0
F..59 F..69	AN56	4.50	11	5.875	4.5	160	170	53	-0.19	10.5	87	4.8	0.625	1.90	0.71	0.188	12.3
	AN143		12					60.2	0.12		110.5	5.5	0.875	2.49	0.98		17.6
	AN145																17.6
	AN182	8.50	10	7.25	5		228	69.5	0.12	15	142.5	13.5	1.125	2.85	1.24	0.25	23.8
	AN184																23.8
	AN213		11					82.5	0.25		164.5	9.5	1.375	3.50	1.52	0.312	34.6
F..79	AN56	4.50	11	5.875	4.5	200	170	53	-0.19	10.5	79	4.8	0.625	1.90	0.71	0.188	18.5
	AN143		12					60.2	0.12		102.5	5.5	0.875	2.49	0.98		21.2
	AN145																21.2
	AN182	8.50	10	7.25	5		228	69.5	0.12	15	134.5	13.5	1.125	2.85	1.24	0.25	27.1
	AN184																27.1
	AN213		11					86.5	0.25		183.5	9.5	1.375	3.65	1.52	0.312	50.3
F..89	AN143	4.50	12	5.875	4.5	250	170	60.2	0.12	10.5	97.5	5.5	0.875	2.49	0.98	0.188	34.8
	AN145																34.8
	AN182	8.50	10	7.25	5		228	69.5	0.12	15	129.5	13.5	1.125	2.85	1.24	0.25	41.0
	AN184																41.0
	AN213		11					86.5	0.25		178.5	9.5	1.375	3.65	1.52	0.312	56.0
	AN254		14					110	0.25		229	2.5	1.625	4.58	1.80	0.375	69.9
	AN284	10.50	15	9.00	5		286	117	0.25	15	236	4.5	1.875	4.85	2.10	0.5	85.1
F..99	AN182	8.50	10	7.25	5	300	228	69.5	0.12	15	124.5	13.5	1.125	2.85	1.24	0.25	41.2
	AN184																41.2
	AN213		11					86.5	0.25		173.5	9.5	1.375	3.65	1.52	0.312	67.7
	AN254		14					110	0.25		224	2.5	1.625	4.58	1.80	0.375	87.5
	AN284	10.50	15	9.00	5		286	117	0.25	15	231	4.5	1.875	4.85	2.10	0.5	102.7
	AN324	12.50	17	11.00	5		356	134.5	0.25	17.5	291	28.5	2.125	5.57	2.36	0.5	153.0
	AN364							146.5					2.375	6.02	2.66	0.625	153.4
F..109	AN182	8.50	10	7.25	5	350	228	69.5	0.12	15	118.5	13.5	1.125	2.85	1.24	0.25	47.8
	AN184																47.8
	AN213		11					86.5	0.25		167.5	9.5	1.375	3.65	1.52	0.312	69.7
	AN254		14					110	0.25		218	2.5	1.625	4.58	1.80	0.375	96.6
	AN284	10.50	15	9.00	5		286	117	0.25	15	225	4.5	1.875	4.85	2.10	0.5	111.8
	AN324	12.50	17	11.00	5		356	134.5	0.25	17.5	285	28.5	2.125	5.57	2.36	0.5	164.2
	AN364							146.5					2.375	6.02	2.66	0.625	164.2
F..129	AN213	8.50	11	7.25	5	450	228	86.5	0.25	15	152.5	9.5	1.375	3.65	1.52	0.312	166.4
	AN254		14					110	0.25		203	2.5	1.625	4.58	1.80	0.375	121.0
	AN284	10.50	15	9.00	5		286	117	0.25	15	210	4.5	1.875	4.85	2.10	0.5	136.2
	AN324	12.50	17	11.00	5		356	134.5	0.25	17.5	270	28.5	2.125	5.57	2.36	0.5	173.1
	AN364							146.5					2.375	6.02	2.66	0.625	173.5
F..159	AN254	8.50	14	7.25	5	550	228	110	0.25	15	195	2.5	1.625	4.58	1.80	0.375	174.4
	AN284	10.50	15	9.00	5		286	117	0.25	15	202	4.5	1.875	4.85	2.10	0.5	189.8
	AN324	12.50	17	11.00	5		356	134.5	0.25	17.5	262	28.5	2.125	5.57	2.36	0.5	226.6
	AN364							146.5					2.375	6.02	2.66	0.625	227.3

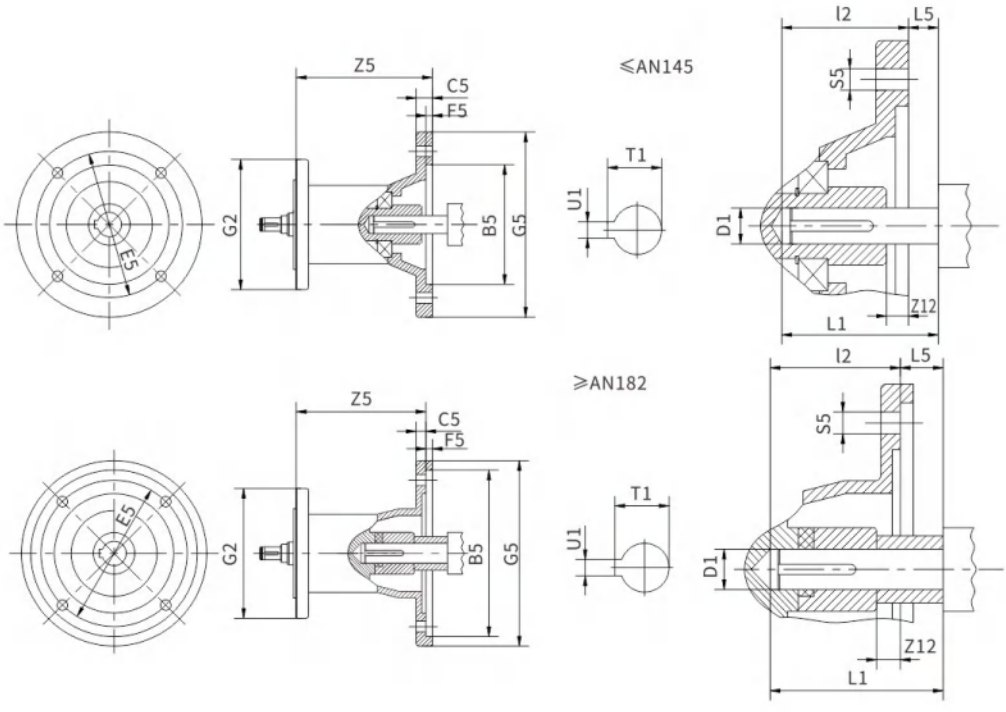

Gear unit type	Motor adaptor	B5 inch	C5 mm	E5 inch	F5 mm	G2 mm	G5 mm	l2 mm	L5 inch	S5 mm	Z5 mm	Z12 mm	D1 inch	L1 inch	T1 inch	U1 inch	weight lb
K..39	AN56	4.50	11	5.875	4.5	120	170	53	-0.19	10.5	92.5	4.8	0.625	1.90	0.71	0.188	11.0
	AN143		12					60.2	0.12		116	5.5	0.875	2.49	0.98		13.0
	AN145																13.0
K..49	AN56	4.50	11	5.875	4.5	160	170	53	-0.19	10.5	87	4.8	0.625	1.90	0.71	0.188	12.3
	AN143		12					60.2	0.12		110.5	5.5	0.875	2.49	0.98		17.6
	AN145																17.6
	AN182	8.50	10	7.25	5		228	69.5	0.12	15	142.5	13.5	1.125	2.85	1.24	0.25	23.8
	AN184																23.8
K..59 K..69	AN56	4.50	11	5.875	4.5	160	170	53	-0.19	10.5	87	4.8	0.625	1.90	0.71	0.188	12.3
	AN143		12					60.2	0.12		110.5	5.5	0.875	2.49	0.98		17.6
	AN145																17.6
	AN182	8.50	10	7.25	5		228	69.5	0.12	15	142.5	13.5	1.125	2.85	1.24	0.25	23.8
	AN184																23.8
	AN213		11					82.5	0.25		164.5	9.5	1.375	3.50	1.52	0.312	34.6
K..79	AN56	4.50	11	5.875	4.5	200	170	53	-0.19	10.5	79	4.8	0.625	1.90	0.71	0.188	18.5
	AN143		12					60.2	0.12		102.5	5.5	0.875	2.49	0.98		21.2
	AN145																21.2
	AN182	8.50	10	7.25	5		228	69.5	0.12	15	134.5	13.5	1.125	2.85	1.24	0.25	27.1
	AN184																27.1
	AN213		11					86.5	0.25		183.5	9.5	1.375	3.65	1.52	0.312	50.3
K..89	AN143	4.50	12	5.875	4.5	250	170	60.2	0.12	10.5	97.5	5.5	0.875	2.49	0.98	0.188	34.8
	AN145																34.8
	AN182	8.50	10	7.25	5		228	69.5	0.12	15	129.5	13.5	1.125	2.85	1.24	0.25	41.0
	AN184																41.0
	AN213		11					86.5	0.25		178.5	9.5	1.375	3.65	1.52	0.312	56.0
	AN254		14					110	0.25		229	2.5	1.625	4.58	1.80	0.375	69.9
	AN284	10.50	15	9.00	5		286	117	0.25	15	236	4.5	1.875	4.85	2.10	0.5	85.1
K..99	AN182	8.50	10	7.25	5	300	228	69.5	0.12	15	124.5	13.5	1.125	2.85	1.24	0.25	41.2
	AN184																41.2
	AN213		11					86.5	0.25		173.5	9.5	1.375	3.65	1.52	0.312	67.7
	AN254		14					110	0.25		224	2.5	1.625	4.58	1.80	0.375	87.5
	AN284	10.50	15	9.00	5		286	117	0.25	15	231	4.5	1.875	4.85	2.10	0.5	102.7
	AN324	12.50	17	11.00	5		356	134.5	0.25	17.5	291	28.5	2.125	5.57	2.36	0.5	153.0
	AN364							146.5					2.375	6.02	2.66	0.625	153.4
K..109	AN182	8.50	10	7.25	5	350	228	69.5	0.12	15	118.5	13.5	1.125	2.85	1.24	0.25	47.8
	AN184																47.8
	AN213		11					86.5	0.25		167.5	9.5	1.375	3.65	1.52	0.312	69.7
	AN254		14					110	0.25		218	2.5	1.625	4.58	1.80	0.375	96.6
	AN284	10.50	15	9.00	5		286	117	0.25	15	225	4.5	1.875	4.85	2.10	0.5	111.8
	AN324	12.50	17	11.00	5		356	134.5	0.25	17.5	285	28.5	2.125	5.57	2.36	0.5	164.2
	AN364							146.5					2.375	6.02	2.66	0.625	164.7
K..129	AN213	8.50	11	7.25	5	450	228	86.5	0.25	15	152.5	9.5	1.375	3.65	1.52	0.312	124.3
	AN254		14					110	0.25		203	2.5	1.625	4.58	1.80	0.375	136.7
	AN284	10.50	15	9.00	5		286	117	0.25	15	210	4.5	1.875	4.85	2.10	0.5	152.1
	AN324	12.50	17	11.00	5		356	134.5	0.25	17.5	270	28.5	2.125	5.57	2.36	0.5	188.9
	AN364							146.5					2.375	6.02	2.66	0.625	189.6
K..159 K..169 K..189	AN254	8.50	14	7.25	5	550	228	110	0.25	15	195	2.5	1.625	4.58	1.80	0.375	174.4
	AN284	10.50	15	9.00	5		286	117	0.25	15	202	4.5	1.875	4.85	2.10	0.5	189.8
	AN324	12.50	17	11.00	5		356	134.5	0.25	17.5	262	28.5	2.125	5.57	2.36	0.5	226.6
	AN364							146.5					2.375	6.02	2.66	0.625	227.3

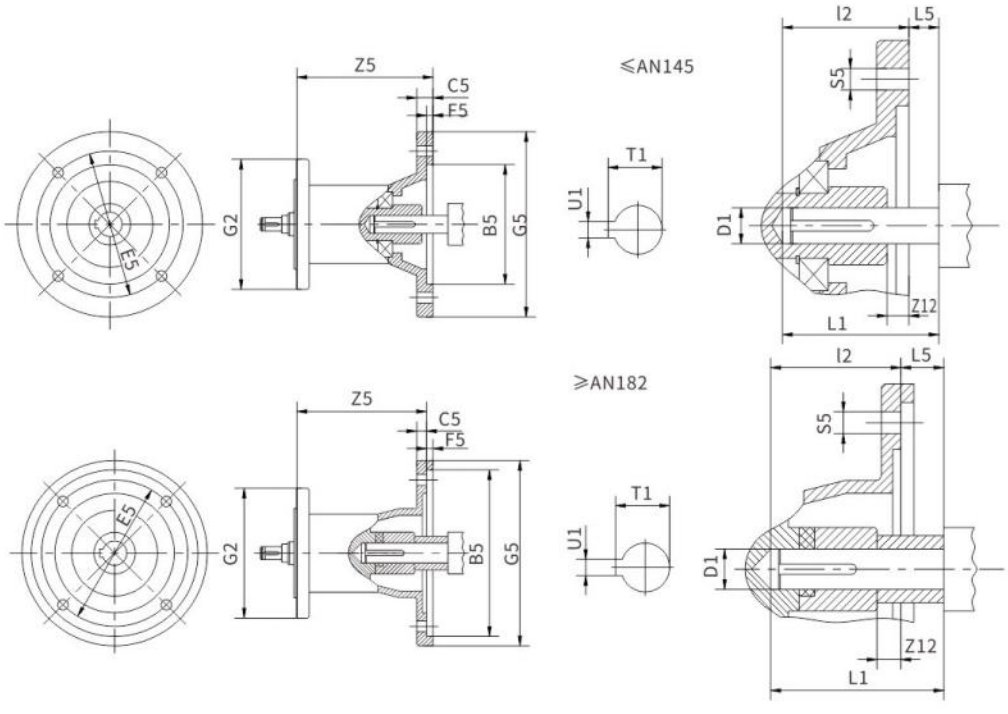

Gear unit type	Motor adaptor	B5 inch	C5 mm	E5 inch	F5 mm	G2 mm	G5 mm	l2 mm	L5 inch	S5 mm	Z5 mm	Z12 mm	D1 inch	L1 inch	T1 inch	U1 inch	weight lb
S..39	AN56	4.50	11	5.875	4.5	120	170	53	-0.19	10.5	92.5	4.8	0.625	1.90	0.71	0.188	11.0
S..49	AN143		12					60.2	0.12		116	5.5	0.875	2.49	0.98		13.0
S..59	AN145																13.0
S..69	AN56	4.50	11	5.875	4.5	160	170	53	-0.19	10.5	87	4.8	0.625	1.90	0.71	0.188	12.3
	AN143		12					60.2	0.12		110.5	5.5	0.875	2.49	0.98		17.6
	AN145																17.6
	AN182	8.50	10	7.25	5		228	69.5	0.12	15	142.5	13.5	1.125	2.85	1.24	0.25	23.8
	AN184																23.8
	AN213		11					82.5	0.25		164.5	9.5	1.375	3.50	1.52	0.312	34.6
S..79	AN56	4.50	11	5.875	4.5	200	170	53	-0.19	10.5	79	4.8	0.625	1.90	0.71	0.188	18.5
	AN143		12					60.2	0.12		102.5	5.5	0.875	2.49	0.98		21.2
	AN145																21.2
	AN182	8.50	10	7.25	5		228	69.5	0.12	15	134.5	13.5	1.125	2.85	1.24	0.25	27.1
	AN184																27.1
	AN213		11					86.5	0.25		183.5	9.5	1.375	3.65	1.52	0.312	50.3
S..89	AN143	4.50	12	5.875	4.5	250	170	60.2	0.12	10.5	97.5	5.5	0.875	2.49	0.98	0.188	34.8
	AN145																34.8
	AN182	8.50	10	7.25	5		228	69.5	0.12	15	129.5	13.5	1.125	2.85	1.24	0.25	41.0
	AN184																41.0
	AN213		11					86.5	0.25		178.5	9.5	1.375	3.65	1.52	0.312	56.0
	AN254		14					110	0.25		229	2.5	1.625	4.58	1.80	0.375	69.9
	AN284	10.50	15	9.00	5		286	117	0.25	15	236	4.5	1.875	4.85	2.10	0.5	85.1
S..99	AN182	8.50	10	7.25	5	300	228	69.5	0.12	15	124.5	13.5	1.125	2.85	1.24	0.25	41.2
	AN184																41.2
	AN213		11					86.5	0.25		173.5	9.5	1.375	3.65	1.52	0.312	67.7
	AN254		14					110	0.25		224	2.5	1.625	4.58	1.80	0.375	87.5
	AN284	10.50	15	9.00	5		286	117	0.25	15	231	4.5	1.875	4.85	2.10	0.5	102.7
	AN324	12.50	17	11.00	5		356	134.5	0.25	17.5	291	28.5	2.125	5.57	2.36	0.5	153.0
	AN364							146.5					2.375	6.02	2.66	0.625	153.4

5. AC Motor Dimensions

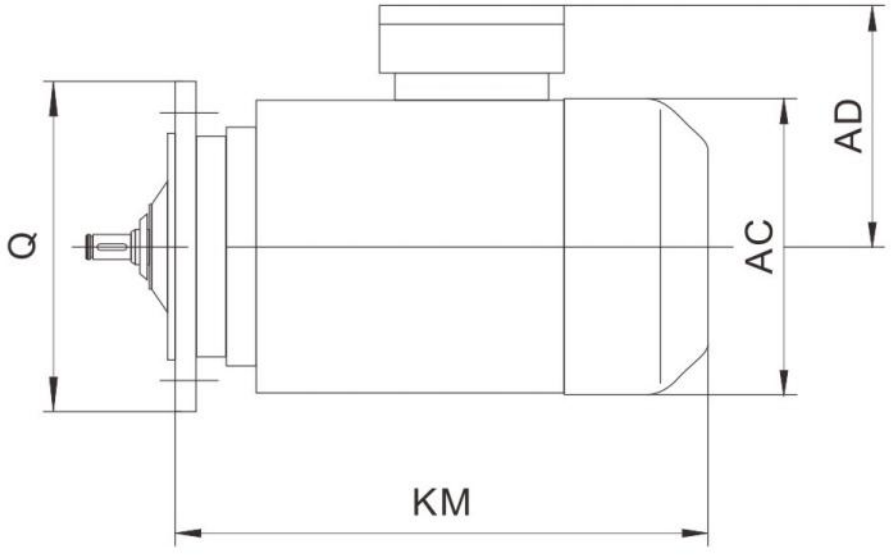

Motor type	Q mm	KM mm	L1 mm	L2 mm	L3 mm	AD mm	AC mm
DN63	120	198	258	258	336	109	120
	160	192	252	252	330		
DN71	120	228	289	289	346	128	135
	160	221	282	282	339		
	200	214	275	275	332		
	250	209	270	270	327		
DN80	120	279	351	351	407	138	156
	160	272	344	344	400		
	200	265	337	337	393		
	250	260	332	332	388		
	300	256	328	328	384		
DN90S	120	291	369	369	418	149	175
	160	284	362	362	411		
	200	277	355	355	404		
	250	272	350	350	399		
	300	267	345	345	394		
	350	260	338	338	387		

Motor type	Q mm	KM mm	L1 mm	L2 mm	L3 mm	AD mm	AC mm
DN90L	120	351	429	429	478	149	175
	160	344	422	422	471		
	200	337	415	415	464		
	250	332	410	410	459		
	300	327	405	405	454		
	350	320	398	398	447		
DN100	120	368	446	446	495	157	198
	160	359	437	437	486		
	200	352	430	430	479		
	250	347	425	425	474		
	300	342	420	420	469		
	350	336	414	414	463		
DN112	160	392	480	456	538	171	221
	200	383	471	447	529		
	250	378	466	442	524		
	300	373	461	437	519		
	350	367	455	431	513		
	400	360	448	424	506		

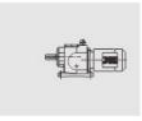
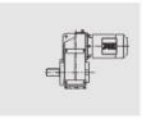



Motor type	Q mm	KM mm	L1 mm	L2 mm	L3 mm	AD mm	AC mm
DN132S	160	392	480	456	538	171	221
	200	383	471	447	529		
	250	378	466	442	524		
	300	373	461	437	519		
	350	367	455	431	513		
	400	360	448	424	506		
DN132M/L	160	474	562	538	620	228	263
	200	463	551	527	609		
	250	458	546	522	604		
	300	453	541	517	599		
	350	447	535	511	593		
	400	440	528	504	586		
	450	432	520	496	578		
DN160M	200	508	618	575	698	251	314
	250	503	613	570	693		
	300	498	608	565	688		
	350	492	602	559	682		
	400	485	595	552	675		
	450	477	587	544	667		
	550	469	579	536	659		
DN160L	200	552	662	619	742	251	314
	250	547	657	614	737		
	300	542	652	609	732		
	350	536	646	603	726		
	400	529	639	596	719		
	450	521	631	588	711		
	550	513	623	580	703		
DN180M	250	624	734	664	769	280	355
	300	619	729	659	764		
	350	613	723	653	758		

Motor type	Q mm	KM mm	L1 mm	L2 mm	L3 mm	AD mm	AC mm
DN180M	400	606	716	646	751	280	355
	450	598	708	638	743		
	550	590	700	630	735		
DN180L	250	672	782	712	817	280	355
	300	667	777	707	812		
	350	661	771	701	806		
	400	654	764	694	799		
	450	646	756	686	791		
	550	638	748	678	783		
DN200	300	680	804	711	811	305	397
	350	674	798	705	805		
	400	667	791	698	798		
	450	659	783	690	790		
	550	651	775	682	782		
DN225S	300	693	827	751	826	335	445
	350	687	821	745	820		
	400	680	814	738	813		
	450	672	806	730	805		
	550	664	789	722	797		
DN225M	300	718	852	776	849	335	445
	350	712	846	770	843		
	400	705	839	763	836		
	450	697	831	755	828		
	550	689	823	747	820		
DN250	400	793	946	839	992	370	510
	450	785	938	831	984		
	550	777	930	823	976		
DN280	400	905	1061	950	1108	408	580
	450	897	1053	942	1098		
	550	889	1045	934	1090		
DN315	660	1130	1286	1175	1331	530	635
DN355	550	1500	1850	2000	2350	655	710
	660	1500	1850	2000	2350		

Notes:

L1 is the KM value for motor with brake.

L2 is the KM value for asynchronous motor with frequency.

L3 is the KM value for asynchronous motor with frequency and brake.

If you have any special requirements,please contact us.

6. Output Flange Dimensions of JRTR and JRTR..F Gearmotors

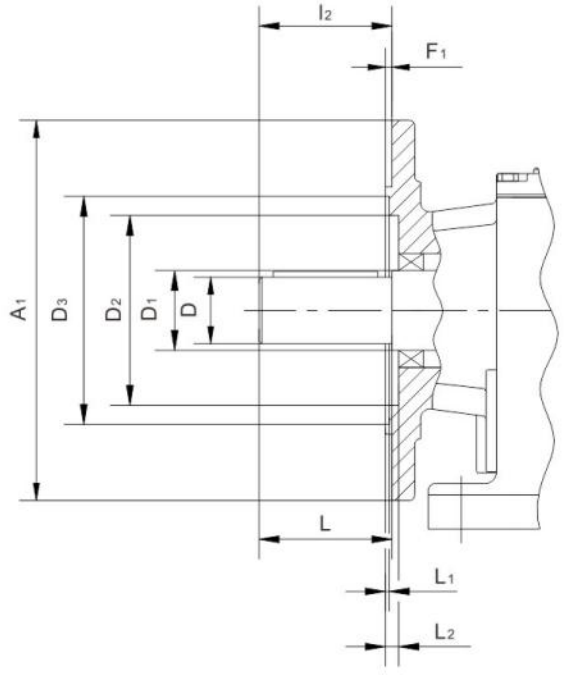

Check dimensions L1 and L2 for selection and installation of output elements

Type	A1	D	D1	D2		D3	F1	I2	L	L1		L2
				RF	R..F					RF	R..F	
JRTRF19,JRTR19F	120	20	25	46	46	65	3	40	40	1	1	5
	140				-	78	3			1	-	5
JRTRF29,JRTR29F	120	25	30	54	54	66	3	50	50	1	1	6
	140				-	79	3			3	-	7
	160				-	92	3.5			3	-	7
JRTRF39,JRTR39F	120	25	35	60	63	70	3	50	50	5	4	7
	160				-	96	3.5			1	-	7.5
	200				-	119	3.5			1	-	7.5
JRTRF49,JRTR49F	140	30	35	72	64	82	3	60	60	4	1	6
	160				-	96	3.5			0.5	-	6.5
	200				-	116	3.5			0.5	-	6.5
JRTRF59,JRTR59F	160	35	40	76	75	96	3.5	70	70	4	2.5	5
	200				-	116	3.5			0	-	5
	250				-	160	4			0.5	-	5.5
JRTRF69,JRTR69F	200	35	50	90	90	118	3.5	70	70	2	4	7
	250				-	160	4			1	-	7.5
JRTRF79,JRTR79F	250	40	52	112	100	160	4	80	80	0.5	2.5	7
	300				-	210	4			0.5	-	7
JRTRF89,JRTR89F	300	50	62	123	122	210	4	100	100	0	1.5	8
	350				-	226	5			1	-	9
JRTRF99	350	60	72	136		236	5	120	120	0		9
	450					320						
JRTRF109	350	70	82	157		232	5	140	140	0		11
	450			186		316						
JRTRF139	450	90	108	180		316	5	170	170	0		10
	550					416						
JRTRF149	450	110	125	210		316	5	210	210	0		10
	550					416						
JRTRF169	550	120	145	290		416	5	210	210	1		10
	660					517	6			2		11






7. JRT Gear motor mounting

Always use bolts quality 8.8 for mounting gear units and geared motors.

Exception

Bolts of quality 10.9 must be used for fastening the flange to the customer–supplied unit in order to transmit the rated torque specified in the catalog. These bolts must be used in case of the following flange–mounted helical geared motors(RF..) and foot/flange –mounted helical geared motors(R..F):

- JRTRF39, JRTR39F with flange ϕ 120mm
- JRTRF49, JRTR49F with flange ϕ 140mm
- JRTRF59, JRTR59F with flange ϕ 160mm

Torque arms for JRTKH169..,JRTKH189..

As standard,there are no torque arms available for gear unit sizes KH169.. and KH189.. Please contact JIE if you require torque arms for these gear units. We will submit The configuration of recommendations.

8.Lubricants


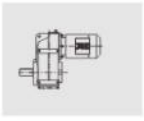



Greneral information

Un less there is a special requirement, JIE always supplies the drives that with lubricant fil specifically for the reducers and mounting position .When ordering a drive ,the decisive factor of lubricant fill qwantites is the drives mounting position .You must adapt the lubricant fill to any subsequent change made to the mounting position check P274 for the (Lubricant fill quantities)

JIE commend the lubricant oil in P273 .The grade and conglutination index in the following.

Lubricating conglutination

DIN(ISO,SAE) Normal lubricating	conglutination index	Ambient temperature	Gear unit type
Mineral oil CLP(CC)	ISOVG220	-10— +40	JRTR、JRTF JRTK
	ISOVG680	0— +40	JRTS

The special lubricate oil.must be used in special situation. For example requesting use the oil with long life-span. If you want ,we can afford the biology decompose oil for food industry.

DIN(ISO,SAE) Normal lubricanting oil	conglutination index	Ambient temperature	Gear unit type
Mineral oil CLP(CC)	ISOVG100	-20—+25	JRTR、JRTF JRTK
Synthetic fluid, CLP PG	ISOVG220	-25—+80	JRTR、JRTF JRTK
Synthetic fluid ,CLP HC	ISOVG460	-30—+80	JRTS

Anti-friction bearing greases

Normal lubricating lipin	Ambient temperature	Gear unit type
mineral bearing lubricating lipin K32N/K2K	-30—+60	Normal type: motor reducer
synthetic bearing lubricating lipin KHC 2R-40	-40—+80	Reducers need to inject the synthetic lubricant
mineral bearing lubricating lipin K3N-30	-25—+80	Special type: select the motor in different situation.
synthetic bearing lubricating lipin K2S-50	-45—-25	Special type: select the motor in different situation.

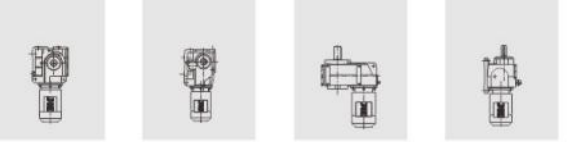

Lubricant table

Gear unit type	Ambient temperature −50℃ 0℃ +50℃ +100℃	ISO VG	TOTAL	Mobil	Shell	bp		KunLun
JRTR,JRTF,JRTK	0℃ 40℃	VG220	TOTAL CARTER EP220	MOBILGEAR 630	SHELL OMALA 220	ENERGOL GR-XP220	CKD220	CKD220
	-10℃ 40℃	VG220	TOTAL CARTER EP220	MOBILGEAR 630	SHELL OMALA 220	ENERGOL GR-XP220		
	-40℃ 40℃	VG220	TOTAL CARTER SH220	MOBIL SHC220	SHELL OMALA HD 220	ENERSYN HTX220		
	-10℃ 80℃	VG320	TOTAL CARTER SH320	MOBIL SHC320	SHELL OMALA HD320	ENERGOL HTX320		
JRTS	0℃ 40℃	VG680	TOTAL CARTER VP/CS 680	MOBILGEAR XMP680				
	-10℃ 40℃	VG460	TOTAL CARTER VP/CS 460	MOBILGEAR XMP460				
	-40℃ 40℃	VG220	TOTAL CARTER SY220	MOBIL GLYGOYLE HE220	SHELL TIVELA WB	ENERSYN SG-XP220		
	-10℃ 80℃	VG680	TOTAL CARTER SY680	MOBIL SHC680	SHELL TIVELA SD	ENERSYN SG-XP680		

Notes: In the above table, the color part is synthetic products and the blank one means no this series products.

Lubricant fill quantities

The specified fill quantities are recommended values .The precise values vary depending on the number of stages and gear ratio .When filling,it is essential to check the oil level plug since i indicates the precise oil capacity .

The following tables show referenced values for lubricant fill quantities in relation to the Mounting position M1~M6.

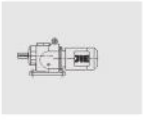

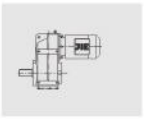

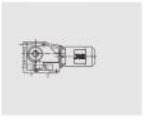



Gear unit type	Fill quantity(L)					
	M1[1)]	M2[1)]	M3	M4	M5	M6
JRTR19/R19F	0.25	0.6	0.35	0.6	0.35	0.35
JRTR29/R29F	0.25/0.4	0.7	0.4	0.7	0.4	0.4
JRTR39/R39F	0.3/1	0.9	1	1.1	0.8	1
JRTR49/R49F	0.7/1.5	1.6	1.5	1.7	1.5	1.5
JRTR59/R59F	0.8/1.7	1.9	1.7	2.1	1.7	1.7
JRTR69/R69F	1.1/2.3	2.6/3.5	2.8	3.2	1.8	2
JRTR79/R79F	1.2/3	3.8/4.3	3.6	4.3	2.5	3.4
JRTR89/R89F	2.3/6	6.7/8.4	7.2	7.7	6.3	6.5
JRTR99	4.6/9.8	11.7/14	11.7	13.4	11.3	11.7
JRTR109	6/13.7	16.3	16.9	19.2	13.2	15.9
JRTR139	10/25	28	29.5	31.5	25	25
JRTR149	15.4/40	46.5	48	52	39.5	41
JRTR169	27/70	82	78	88	66	69

Gear unit type	Fill quantity(L)					
	M1[1)]	M2[1)]	M3	M4	M5	M6
JRTRF19	0.25	0.6	0.35	0.6	0.35	0.35
JRTRF29	0.25/0.4	0.7	0.4	0.7	0.4	0.4
JRTRF39	0.4/1	0.9	1	1.1	0.8	1
JRTRF49	0.7/1.5	1.6	1.5	1.7	1.5	1.5
JRTRF59	0.8/1.7	1.8	1.7	2.0	1.7	1.7
JRTRF69	1.2/2.5	2.7/3.6	2.7	3.1	1.9	2.1
JRTRF79	1.2/2.6	3.8/4.1	3.3	4.1	2.4	3
JRTRF89	2.4/6	6.8/7.9	7.1	7.7	6.3	6.4
JRTRF99	5.1/10.2	11.9/14	11.2	14	11.2	11.8
JRTRF109	6.3/14.9	15.9	17	19.2	13.1	15.9
JRTRF139	9.5/25	27	29	32.5	25	25
JRTRF149	16.4/42	47	48	52	42	42
JRTRF169	26/70	82	78	88	65	71

The output end gear unit of multi-stage gear units must be filled with the larger oil volume.

Gear unit type	Fill quantity(L)					
	M1	M2	M3	M4	M5	M6
JRTRX59	0.6	0.8	1.3	1.3	0.9	0.9
JRTRX69	0.8	0.8	1.7	1.9	1.1	1.1
JRTRX79	1.1	1.5	2.6	2.7	1.6	1.6
JRTRX89	1.7	2.5	4.8	4.8	2.9	2.9
JRTRX99	2.1	3.4	7.4	7	4.8	4.8
JRTRX109	3.9	5.6	11.6	11.9	7.7	7.7

Gear unit type	Fill quantity(L)					
	M1	M2	M3	M4	M5	M6
JRTRXF59	0.5	0.8	1.1	1.1	0.7	0.7
JRTRXF69	0.7	0.8	1.5	1.7	1	1
JRTRXF79	0.9	1.5	2.4	2.5	1.6	1.6
JRTRXF89	1.6	2.5	4.9	4.7	2.9	2.9
JRTRXF99	2.1	3.6	7.1	7	4.8	4.8
JRTRXF109	3.1	5.9	11.2	10.5	7.2	7.2

Exact oil quantity of JRTR179&JRTR189, please consult JIE.






Parallel shaft helical gear units.(JRTF..)

JRTF..,JRTFA..B,JRTFH..B,JRTFV..B

Gear unit type	Fill quantity(L)					
	M1	M2	M3	M4	M5	M6
JRTF39	1	1.2	0.7	1.2	1	1.1
JRTF49	1.5	1.8	1.1	1.9	1.5	1.7
JRTF59	2.6	3.7	2.1	3.5	2.8	2.9
JRTF69	2.7	3.8	1.9	3.8	2.9	3.2
JRTF79	5	7.3	4.3	8	6	6.3
JRTF89	10	13.0	7.7	13.8	10.8	11
JRTF99	18.5	22.5	12.6	25.2	18.5	20
JRTF109	24.5	32	19.5	37.5	27	27
JRTF129	40.5	55	34	61	46.5	47
JRTF159	69	104	63	105	86	78

JRTFF..

Gear unit type	Fill quantity(L)					
	M1	M2	M3	M4	M5	M6
JRTFF39	1	1.2	0.7	1.3	1	1.1
JRTFF49	1.6	1.9	1.1	1.9	1.5	1.7
JRTFF59	2.8	3.8	2.1	3.7	2.9	3
JRTFF69	2.7	3.8	1.9	3.8	2.9	3.2
JRTFF79	5.1	7.3	4.3	8.1	6	6.3
JRTFF89	10.3	13.2	7.8	14.1	11	11.2
JRTFF99	19	22.5	12.6	25.5	18.9	20.5
JRTFF109	25.5	32	19.5	38.5	27.5	28
JRTFF129	41.5	56	34	63	46.5	49
JRTFF159	72	105	64	106	87	79

JRTFA..,JRTFH..,JRTFV..,JRTFAF..,JRTFHF..,JRTFVF..,JRTFAZ..,JRTFHZ..,JRTFVZ..

Gear unit type	Fill quantity(L)					
	M1	M2	M3	M4	M5	M6
JRTF..39	1	1.2	0.7	1.2	1	1.1
JRTF..49	1.5	1.8	1.1	1.9	1.5	1.7
JRTF..59	2.7	3.2	2.1	3.6	2.9	3
JRTF..69	2.7	3.8	1.9	3.8	2.9	3.2
JRTF..79	5	7.3	4.3	8	6	6.3
JRTF..89	11	13.0	7.7	13.8	10.8	11
JRTF..99	18.5	22.5	12.6	25.0	18.5	20
JRTF..109	24.5	32	19.5	37.5	27	27
JRTF..129	39	55	34	61	45	46.5
JRTF..159	68	103	62	104	85	77

Exact oil quantity of JRTF169, please consult JIE.

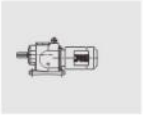
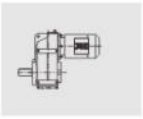

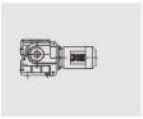

Helical–bevel Gear unit (JRTK..)

JRTK.,JRTKA..B,JRTKH..B,JRTKV..B

Gear unit type	Fill quantity(L)					
	M1	M2	M3	M4	M5	M6
JRTK..39	0.5	1	1	1.3	1	1
JRTK..49	0.8	1.3	1.5	2	1.6	1.6
JRTK..59	1.2	2.3	2.5	3	2.6	2.4
JRTK..69	1.1	2.4	2.6	3.4	2.6	2.6
JRTK..79	2.2	4.1	4.4	5.2	4.2	4.4
JRTK..89	3.7	8	8.7	10.4	7.8	8
JRTK..99	7	14	15.7	20	15.7	15.5
JRTK..109	10	21	25.5	33.5	24	24
JRTK..129	21	41.5	44	51	40	41
JRTK..159	31	62	65	90	58	62
JRTK..169	35	100	100	125	85	85
JRTK..189	60	170	170	205	130	130

JRTKF..

Gear unit type	Fill quantity(L)					
	M1	M2	M3	M4	M5	M6
JRTKF39	0.5	1.1	1.1	1.5	1	1
JRTKF49	0.8	1.3	1.7	2.2	1.6	1.6
JRTKF59	1.3	2.3	2.7	3	2.9	2.7
JRTKF69	1.1	2.4	2.8	3.6	2.7	2.7
JRTKF79	2.1	4.1	4.4	6	4.5	4.5
JRTKF89	3.7	8.2	9	11.9	8.4	8.4
JRTKF99	7	14.7	17.3	21.5	15.7	16.5
JRTKF109	10	22	26	35	25	25
JRTKF129	21	41.5	46	55	41	41
JRTKF159	31	66	69	92	62	62

JRTKA..,JRTKH..,JRTKV..,JRTKAF..,JRTKHF..,JRTKVF..,JRTKAZ..,JRTKHZ..,JRTKVZ..

Gear unit type	Fill quantity(L)					
	M1	M2	M3	M4	M5	M6
JRTK..39	0.5	1	1	1.4	1	1
JRTK..49	0.8	1.3	1.6	2.1	1.6	1.6
JRTK..59	1.3	2.3	2.7	3	2.9	2.7
JRTK..69	1.3	2.4	2.7	3.6	2.6	2.6
JRTK..79	2.1	4.1	4.6	6	4.4	4.4
JRTK..89	3.7	8.2	8.8	11.1	8	8
JRTK..99	7	14.7	15.7	20	15.7	15.7
JRTK..109	10	20.5	24	32	24	24
JRTK..129	21	41.5	43	51	40	40
JRTK..159	31	66	67	87	62	62
JRTK..169	35	100	100	125	85	85
JRTK..189	60	170	170	205	130	130






Helical-worm Gear units.(JRTS..)

JRTS..

Gear unit type	Fill quantity(L)					
	M1	M2	M3[1)]	M4	M5	M6
JRTS39	0.25	0.4	0.5	0.6	0.4	0.4
JRTS49	0.35	0.8	0.7	1.1	0.8	0.8
JRTS59	0.5	1.2	1	1.5	1.3	1.3
JRTS69	1	2.0	2.2/3.1	3.2	2.6	2.6
JRTS79	1.9	4.2	3.7/5.4	6	4.4	4.4
JRTS89	3.3	8.1	6.9/10.4	12	8.4	8.4
JRTS99	6.8	15	13.4/18	22.5	17	17

1) The output end gear unit of multi-stage gear units must be filled with the larger oil volume.

JRTSF..

Gear unit type	Fill quantity(L)					
	M1	M2	M3[1)]	M4	M5	M6
JRTSF39	0.25	0.4	0.5	0.6	0.4	0.4
JRTSF49	0.4	0.9	0.9	1.2	1.0	1
JRTSF59	0.5	1.2	1	1.6	1.4	1.4
JRTSF69	1	2.2	2.3/3	3.2	2.7	2.7
JRTSF79	1.9	4.1	3.9/5.8	6.5	4.9	4.9
JRTSF89	3.8	8	7.1/10.1	12	9.1	9.1
JRTSF99	7.4	15	13.8/18.8	23.6	18	18

1) The output end gear unit of multi-stage gear units must be filled with the larger oil volume.

JRTSA..,JRTSH..,JRTSAF..,JRTSHF..,JRTSAZ..,JRTSHZ..

Gear unit type	Fill quantity(L)					
	M1	M2	M3[1)]	M4	M5	M6
JRTS..39	0.25	0.4	0.5	0.6	0.4	0.4
JRTS..49	0.4	0.8	0.7	1.1	0.8	0.8
JRTS..59	0.5	1.1	1	1.6	1.2	1.2
JRTS..69	1	2	1.8/2.6	2.9	2.5	2.5
JRTS..79	1.8	3.9	3.6/5	5.9	4.5	4.5
JRTS..89	3.8	7.4	6/8.7	11.2	8	8
JRTS..99	7	14	11.4/16	21	15.7	15.7

1) The output end gear unit of multi-stage gear units must be filled with the larger oil volume.

11. Installation and Mounting Positions

1. Mounting Position designation

JIE differentiates between six mounting position M1-M6 for geared motors.
The following shows the spatial arrangement of the gear units in mounting positions M1-M6.

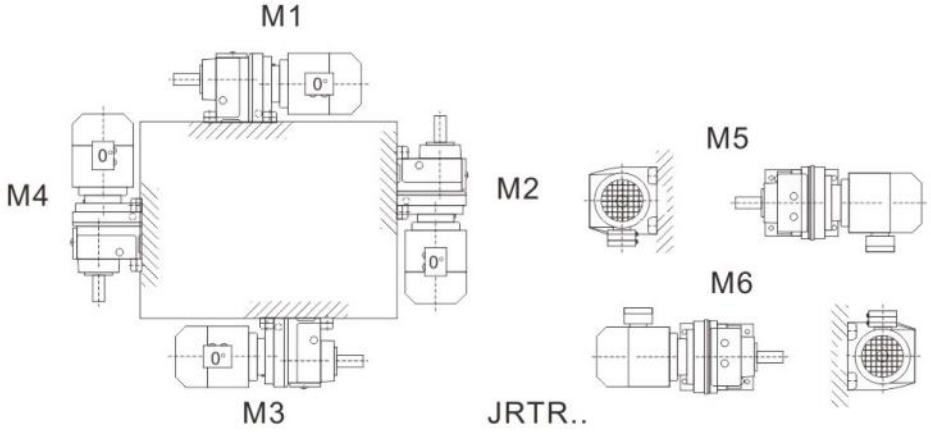

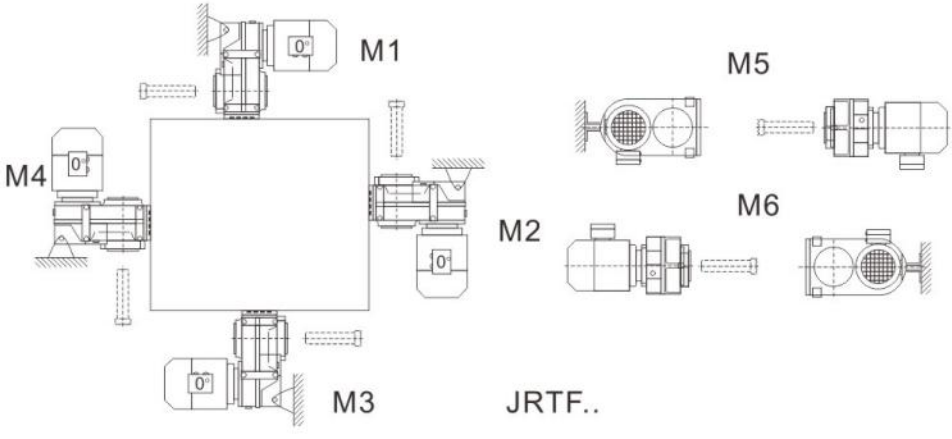

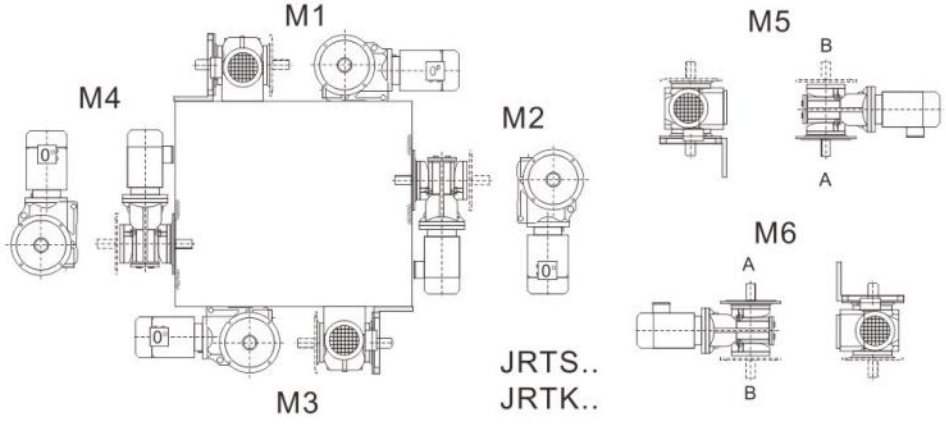



Important indention information

Except the mounting position ,the indention informations for depicting the figure of gear

Unit exactly are necessary.



Position of the motor terminal box

For the right-angle shaft reducers: output shaft connection.



For the right-angle shaft reducers with shrink-disk: with or without flange.

For the drive with a backstop: the Direction of rotation.



Position of the motor terminal box and cable entry

"Normal" , "1" , "2" , "3"
Possible positions of the terminal box are 0°,90°,180°or 270° as viewed onto the fan guard =B-side
In addition,the position of the cable entry can be selected.The possibilities are "X"(=normal position),"1","2" or "3"

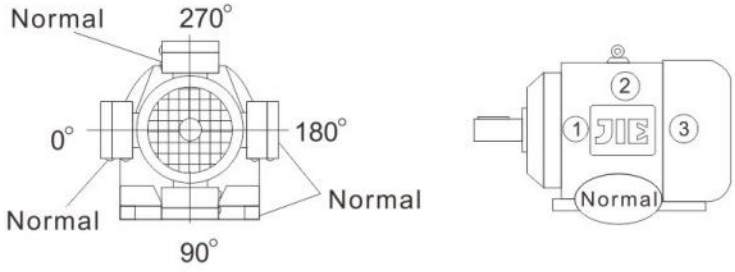

Fig:Position of the terminal box and cable entry



Unless other information is given regarding the terminal box,the 0° type with "X" cable entry will be supplied .We recommend selecting cable entry "2" with mounting position M3.

The terminal box cannot be positioned at 90° on the JRTR19DN71..geared motor.
Cable entry "2" is not possible with the DN71..BE motor with terminal box position 90°

Drive Rotation with Backstop

If the drive has a RS backstop,it is necessary to stipulate the direction of drive rotation.
The following definition applies:
Looking onto the output shaft:Clockwise(CW) =Rotating to the right
Counterclockwise(CCW) =Rotating to the left

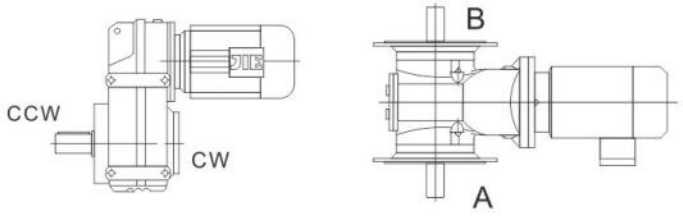

Fig: Direction of rotation of the output shaft

In right-angle gear units ,it is necessary to indicate if the direction of rotation is given where be looked from the A or B end.

In right–angle gear units ,it is necessary to indicate the position of the output shaft and output flange:A or B or A+B

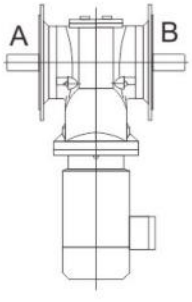

Fig.:Position of the output shaft

Position of the connection end in right-angle gear units with shrink disk

In shaft mounted right-angle gear units with shrink disk ,it is necessary to indicate whether the A or B end is the connection end .In Fig.20 the A end and is the connection end .The shrink disk is located opposite the connection end.

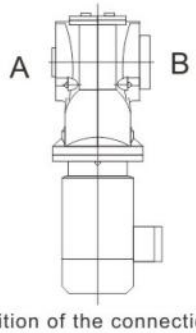

Fig.:Position of the connection end

Sample orders

Connection end at bottom only is possible with K169/K189 helical-beveal gear units in mounting positions M5 and M6.

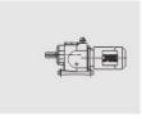
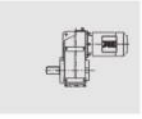



Type	Mounting position	Shaft with	Position of Shrink disk	Flange	Position of terminal box	Position of cable entry	ration direction	Out put shaft direction
JRTKF49DN71M4	M5	A	-	B	0°	"Normal"	CW	A
JRTSF99DN180M4	M2	A+B	-	A+B	180°	"2"	-	A+B
JRTKH109DN160L4	M1	-	B	-	270°	"3"	-	-

Symbols used

The following table shows the symbols used in the mounting position sheets and what they mean:

Symbol	Meaning
	Breather valve
	Oil level plug
	Oil drain plug
	In line plug

Churning losses

*

In creased churning losses may arise in some mounting positions , please contact JIE in case of the following combinations.

Mounting position	Gear unit type	Gear unit size	Input speed
M2,M4	JRTR	99-109	>2500
		>109	>1500
M2,M3,M4,M5,M6	JRTF	99-109	>2500
		>109	>1500
	JRTK	79-109	>2500
		>109	>1500
	JRTS	79-99	>2500

Oil Inspection and maintenance intervals

Frequency	What to do
After 300 hours initial operating	cleanning house,then change oil
Every 3000 machine hours, at least every 6 mouths	Check oil and oil level
Depending on the operating conditions every 3 years at the latest	Change mineral oil
	Replace anti-friction bearing greaseReplace oil seal
Depending on the operating conditions every 5 years at the latest	Change synthetic oil
	Replace anti-friction bearing grease Replace oil seal
JRTR19/29 and JRTF27 are have lubrication for life and are therefore maintenance-free	

2. Helical Inline Mounting Positions

JRTR19-JRTR169

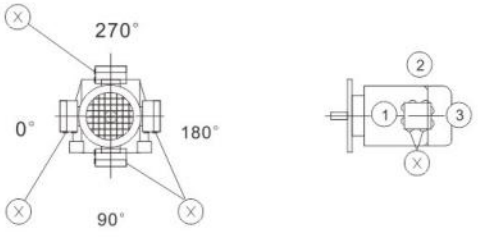

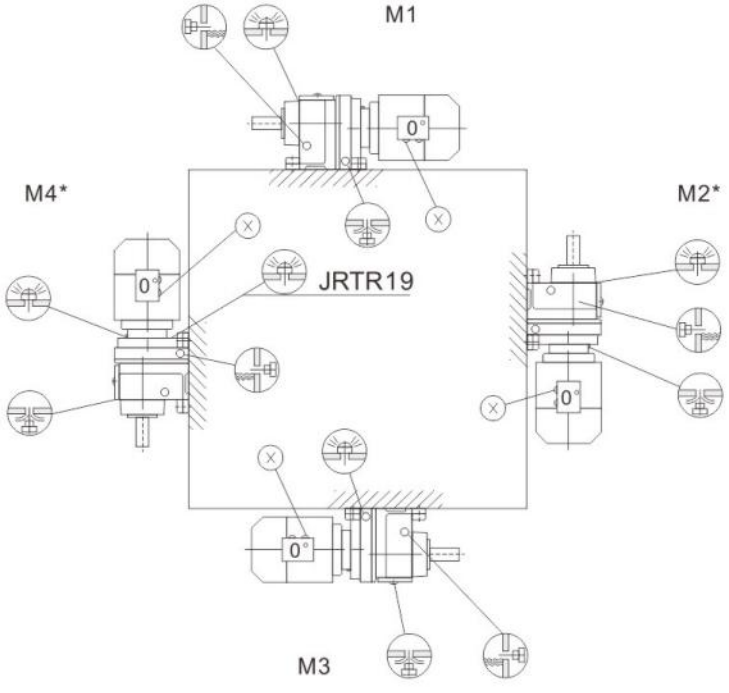

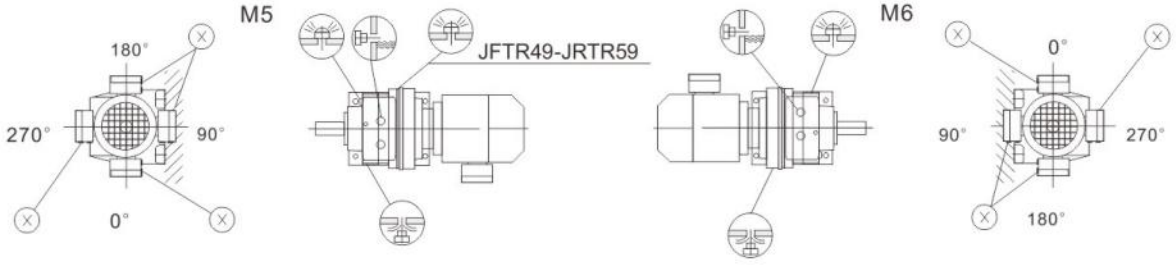

JRTR19，JRTR29		M1,M3,M5,M6
JRTR49，JRTR59		M5
JRTR19，JRTR29		

JRTRF19-JRTRF169

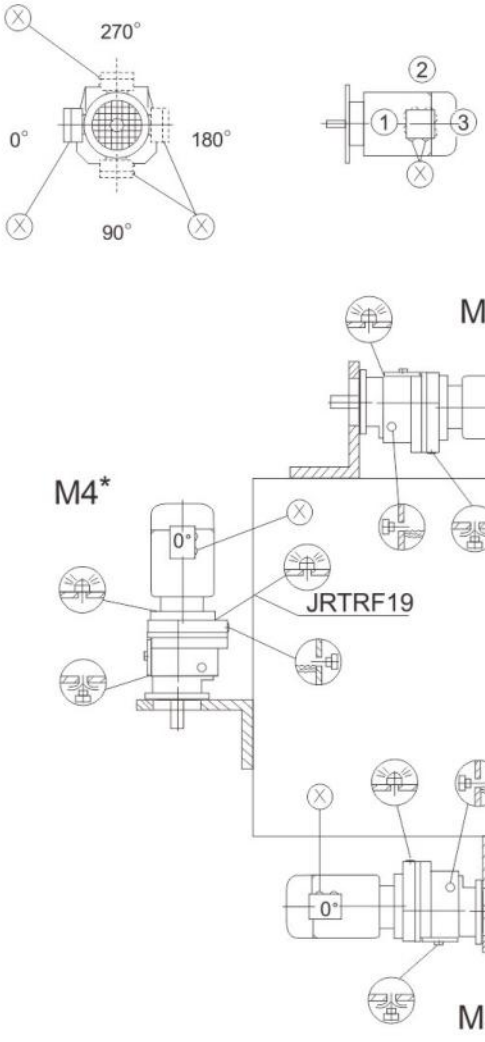

JRTRF19,JRTRF29		M1,M3,M5,M6
JRTRF49,JRTRF59		M5
JRTRF19,JRTRF29		

JRTR19F～JRTR89F

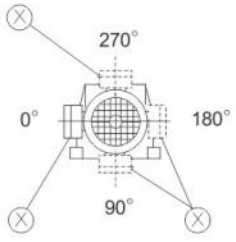

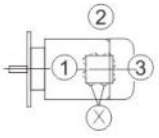

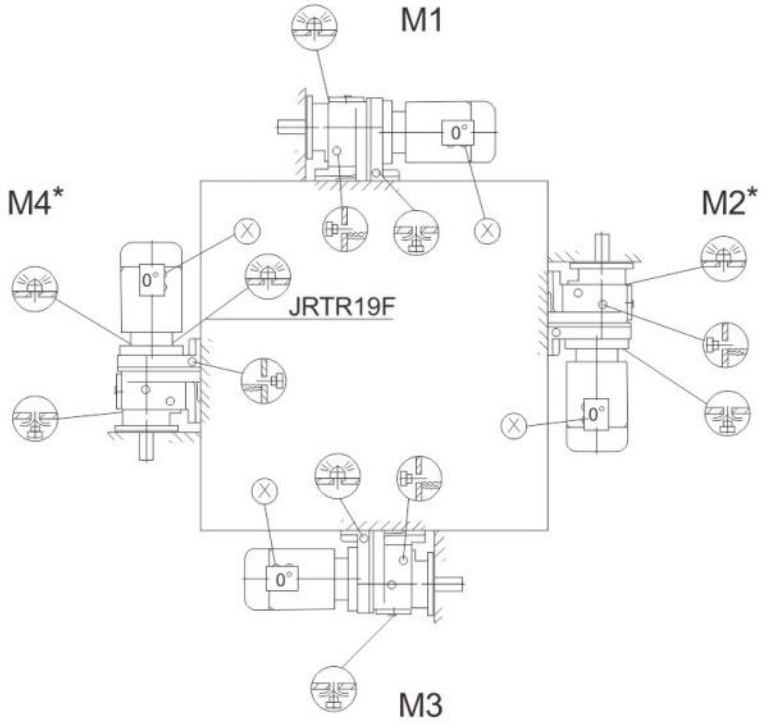

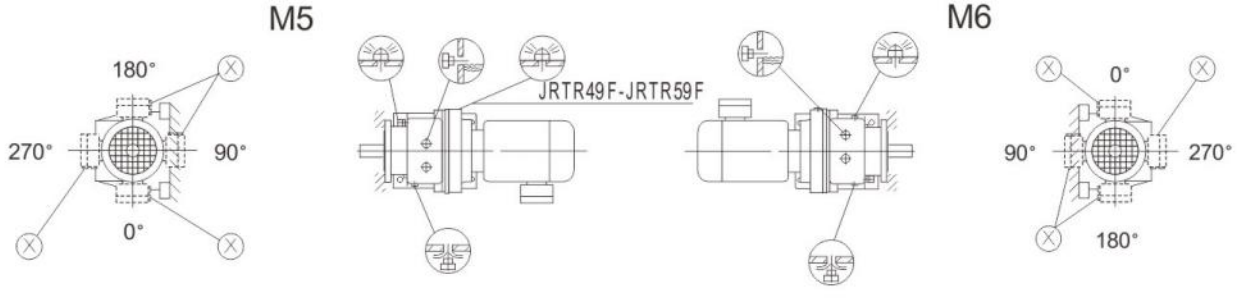

JRTR 19F,JRTR29F M1,M3,M5,M6

JRTR 49F,JRTR59F M5

JRTR 19F,JRTR29F

JRTRX59~JRTRX109

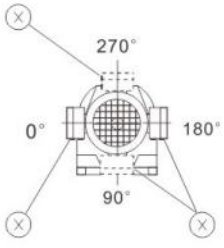

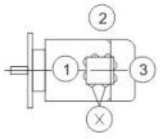

M1

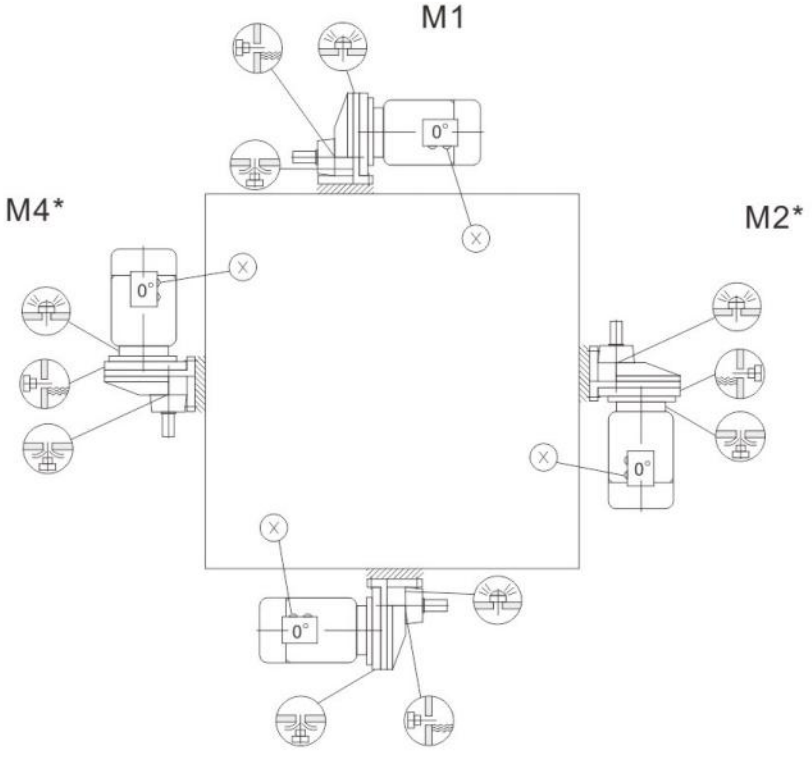

M3

M5

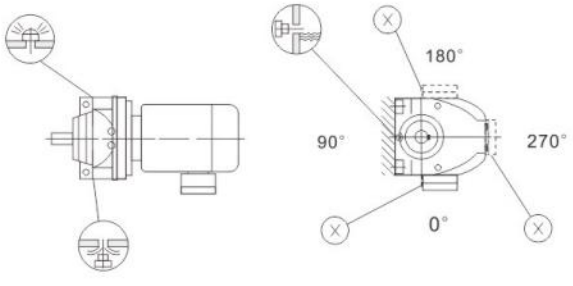

M6

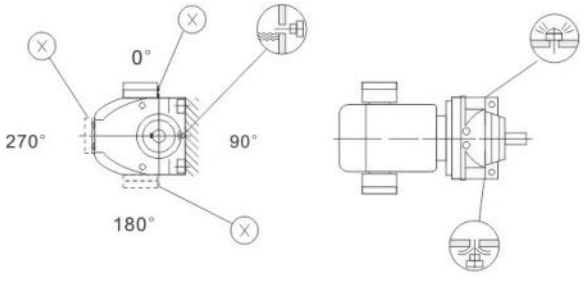

JRTRXF59~JRTRXF109

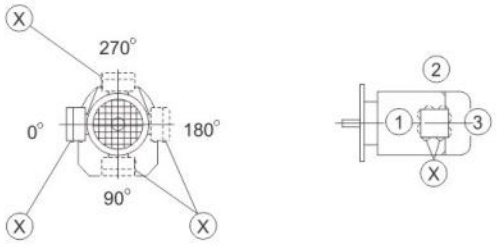

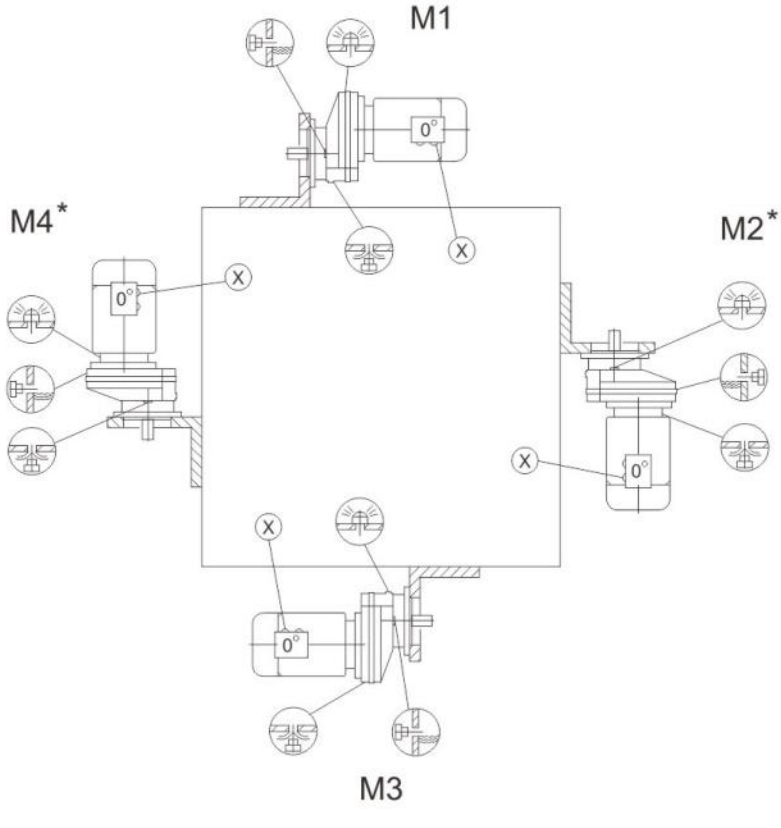

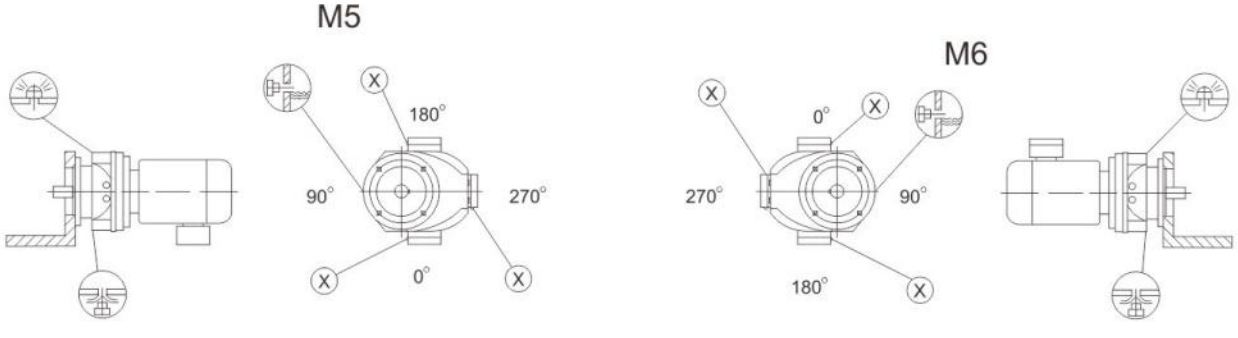

3. Parallel Shaft Gearmotor Mounting Positions

JRTF/FA..B/FH39B-159B,JRTFV39B-109B

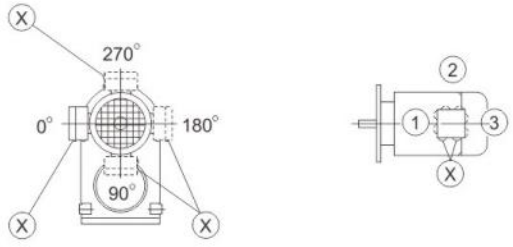

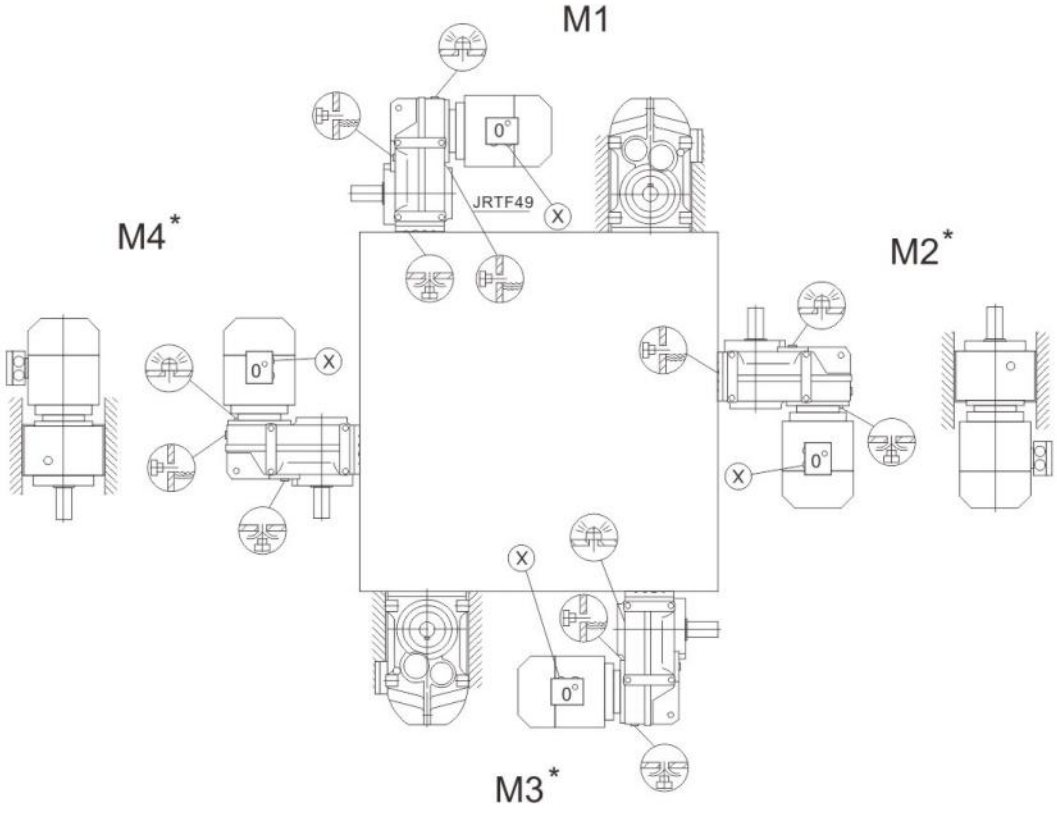

M3*

M5*

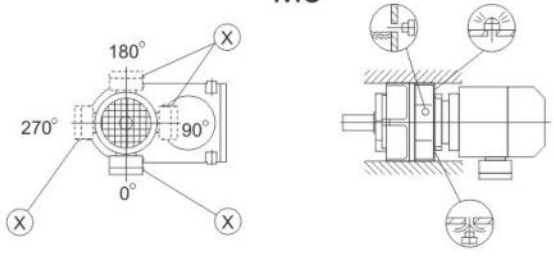

M6*

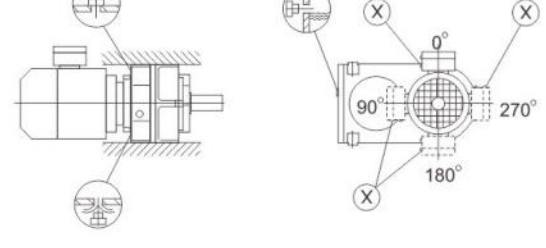

JRTFF/FAF/FHF/FAZ/FHZ39-159,JRTFVF/FVZ39-109

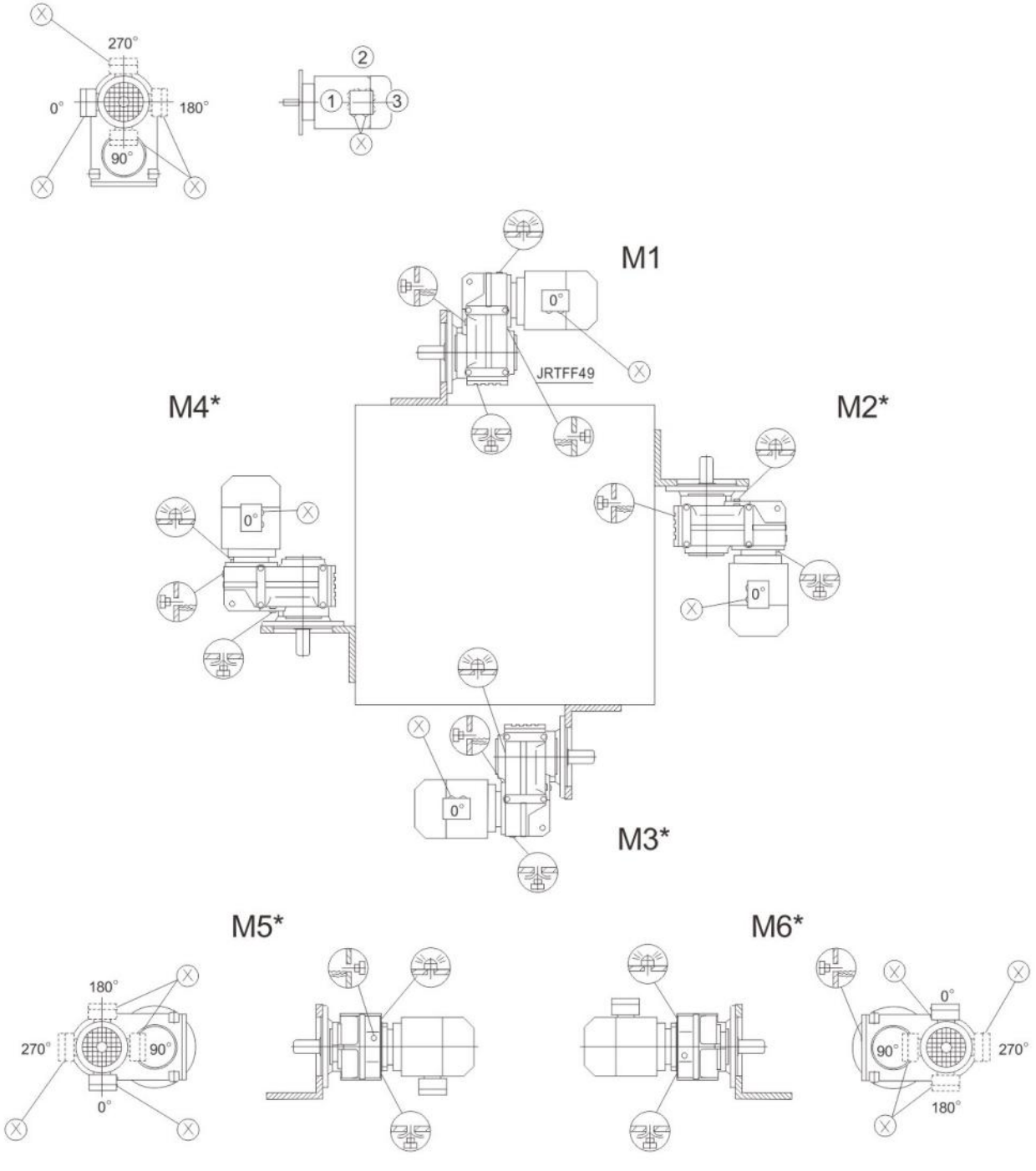

JRTFA/FH39B/G-159B/G,JRTFV39B/G-109B/G

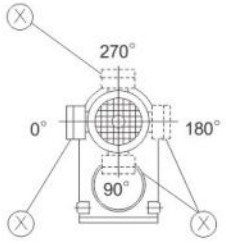

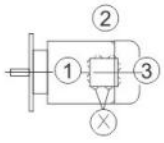

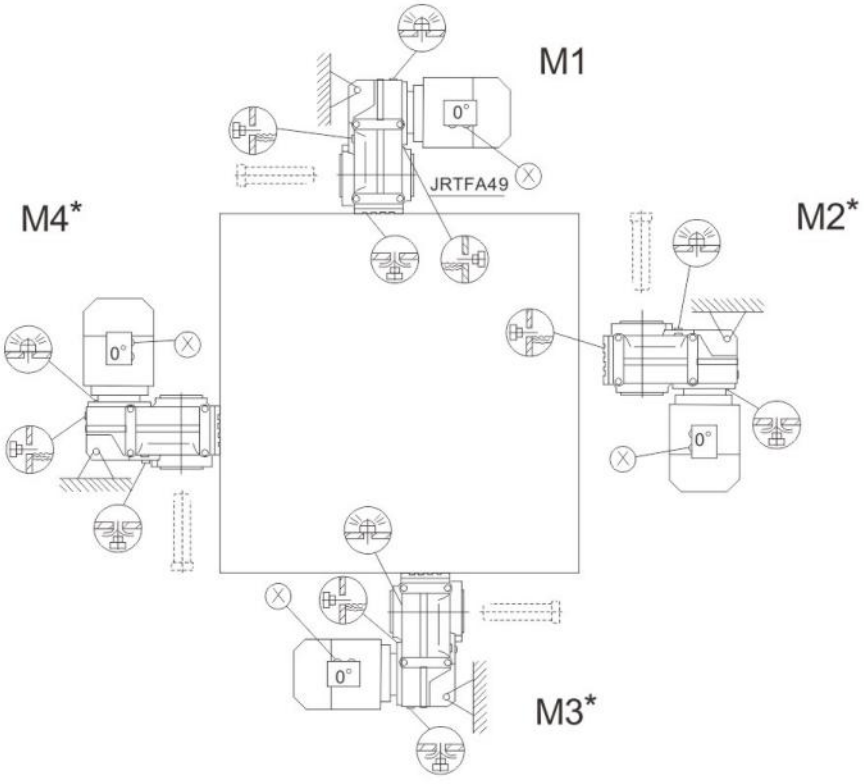

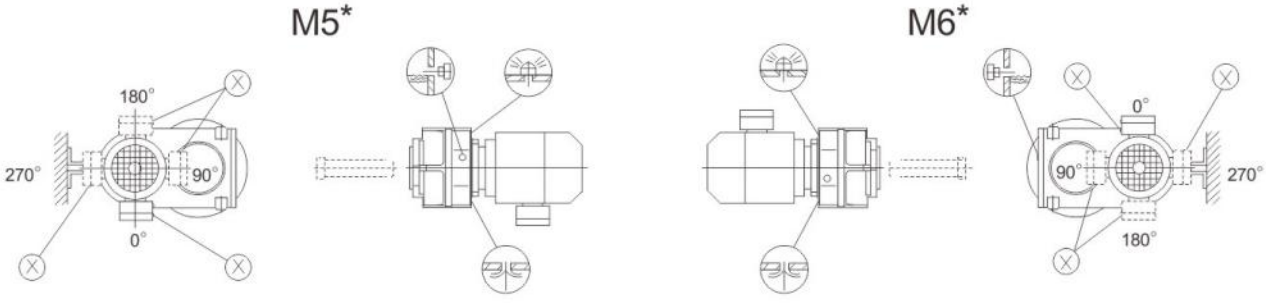

4. Bevel Gearmotor Mounting Positions

K/KA..B/KH49B-159B,JRTKV49B-109B

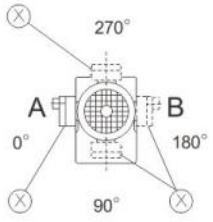

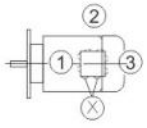

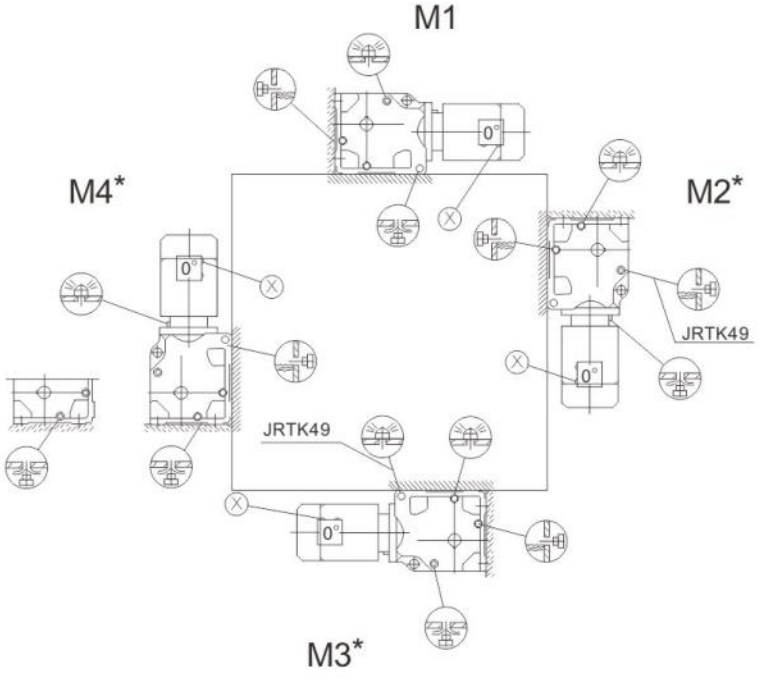

M5*

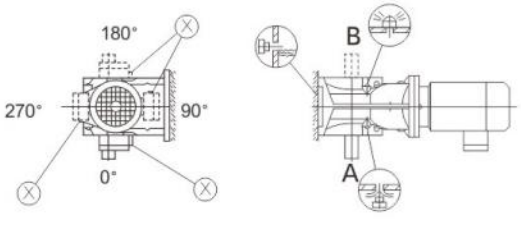

M6*

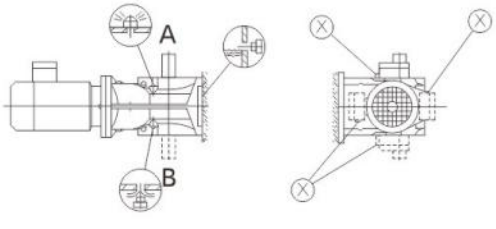

JRTK169-189,JRTKH169B-189B

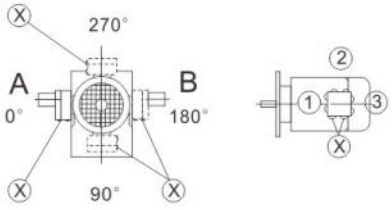

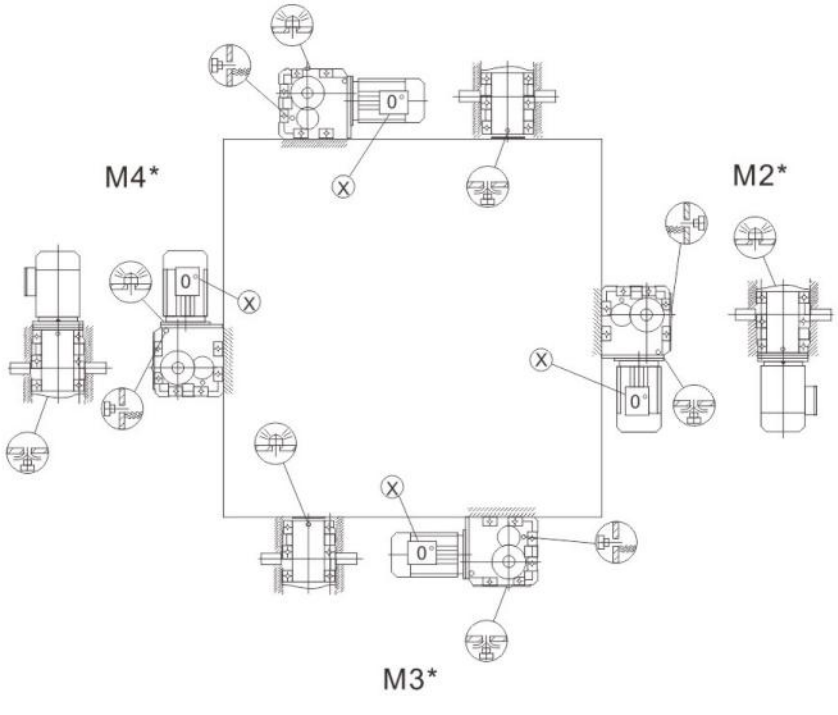

M5*

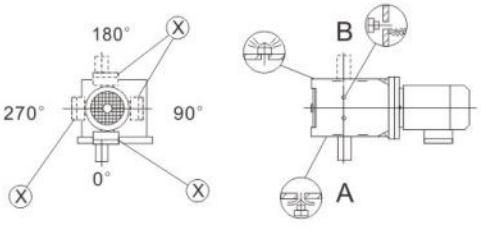

M6*

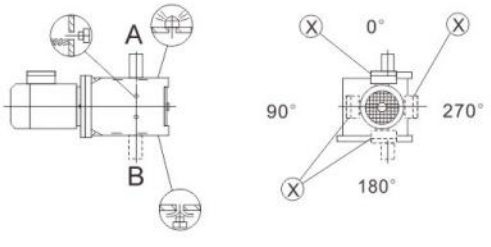

JRTKF/KAF/KAZ/KHZ39-159,JRTKVF/KVZ39-109

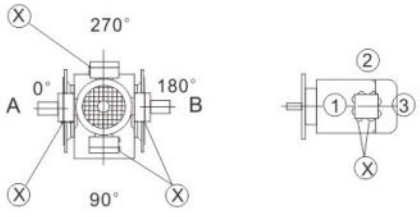

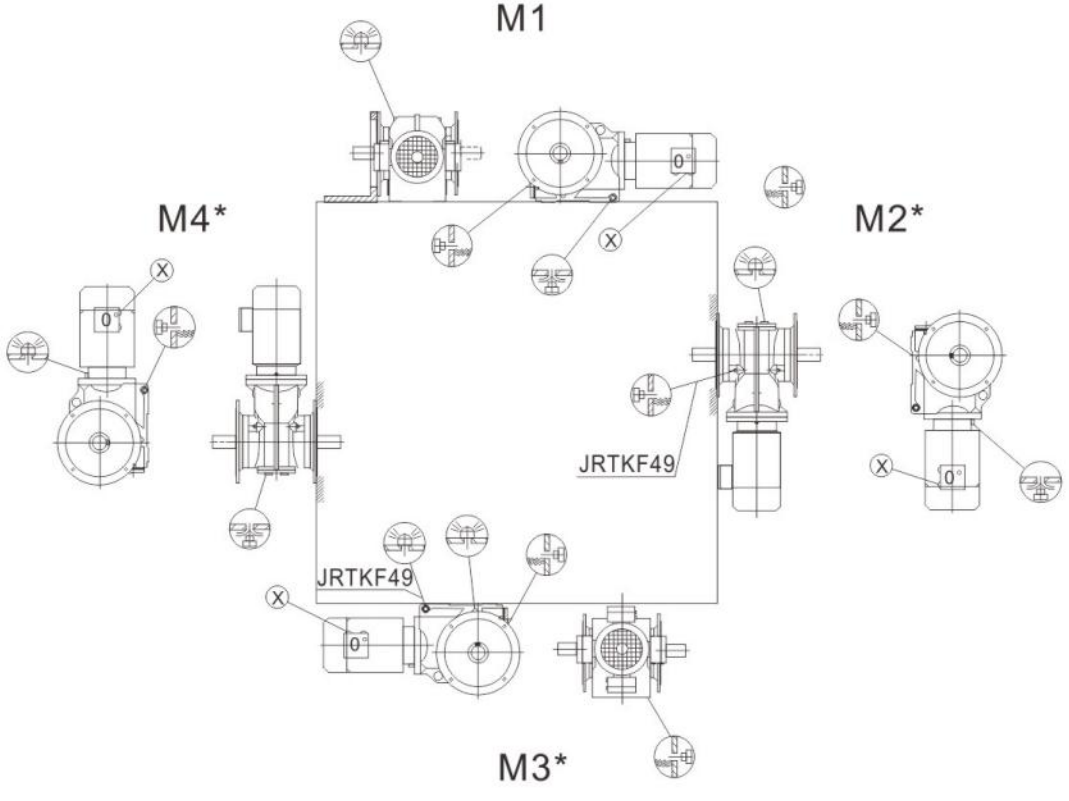

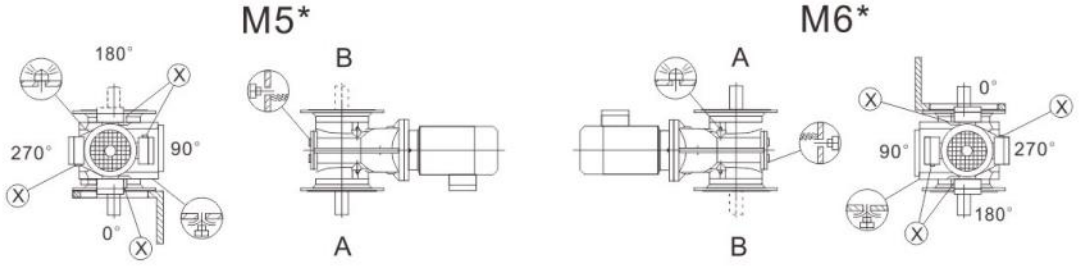

JRTKA/KH39-159,JRTKV39-109

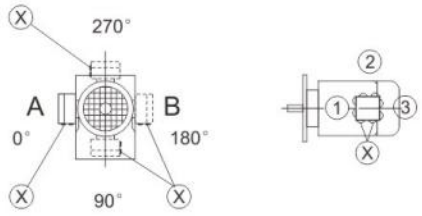

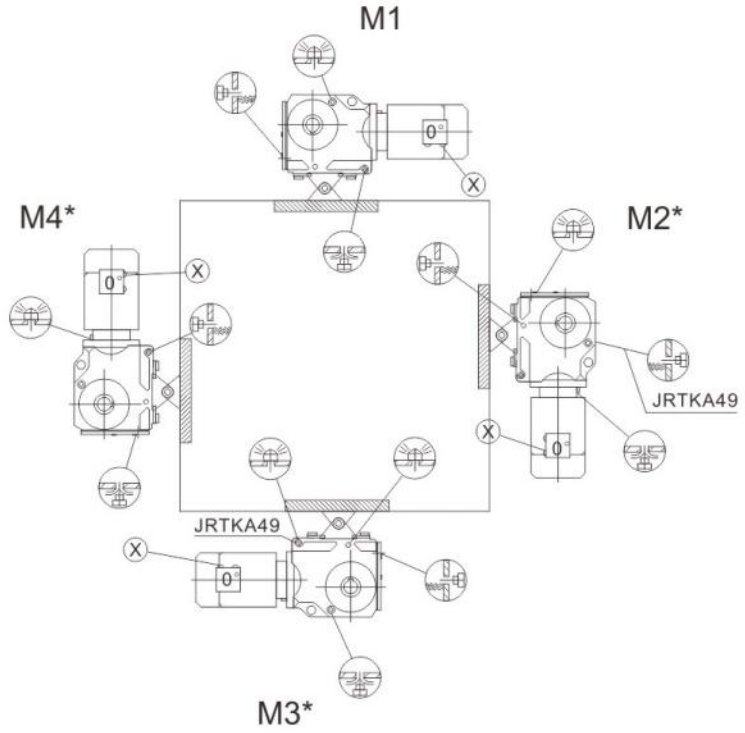

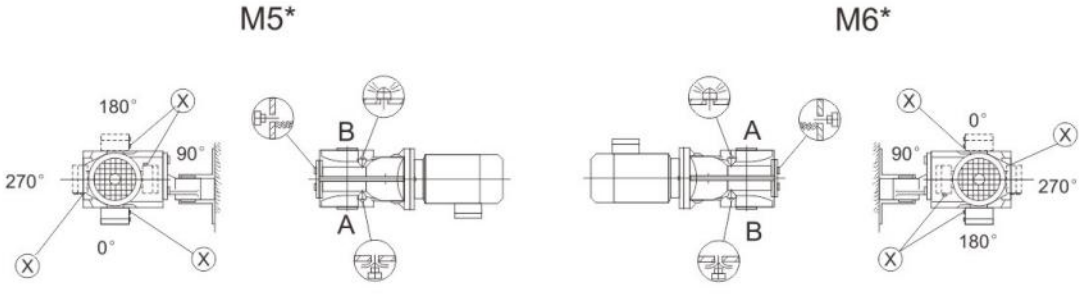

JRTKH169-189

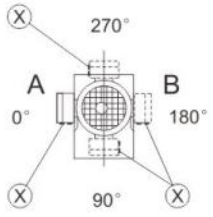

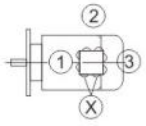

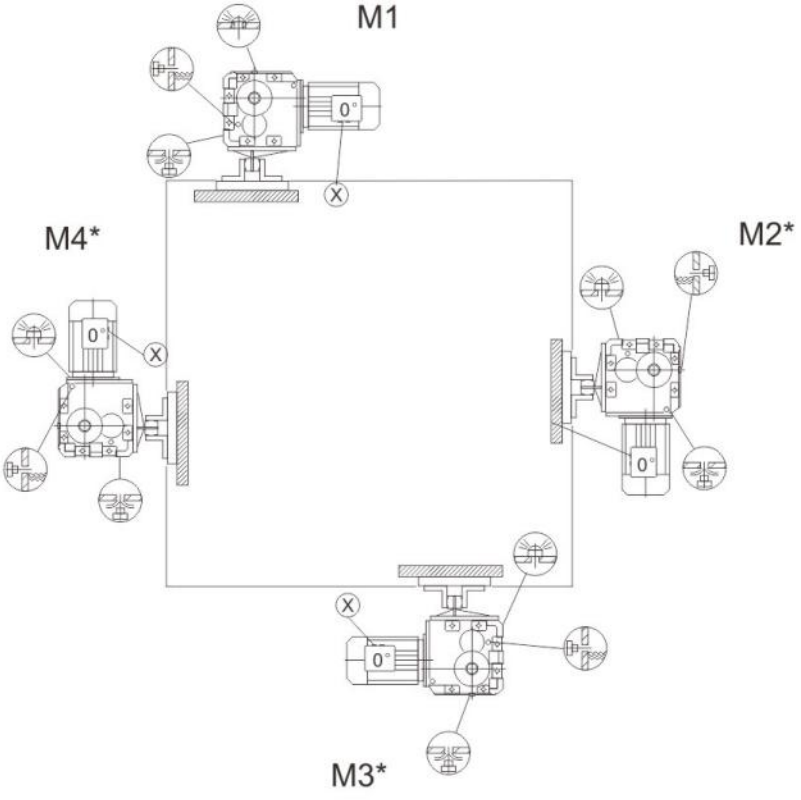

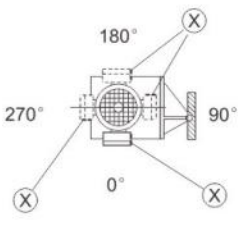

M5*

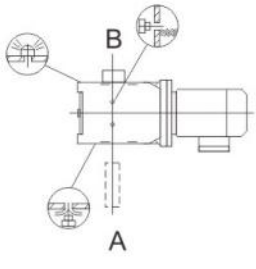

M6*

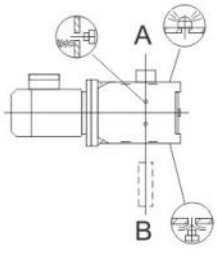

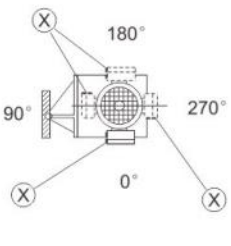

5. Worm Gearmotor Mounting Positions

JRTS39

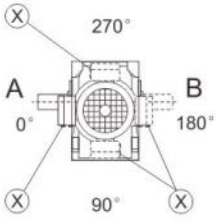

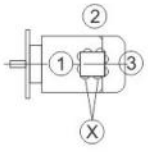

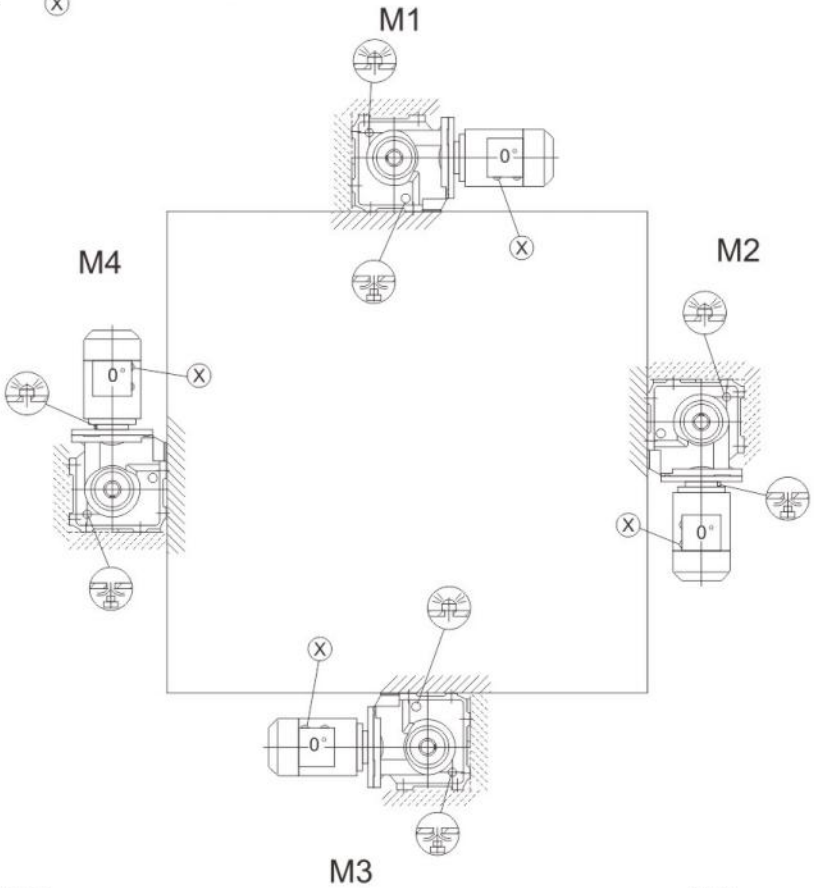

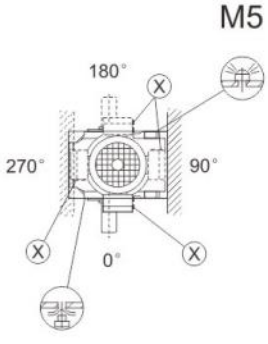

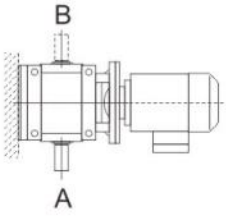

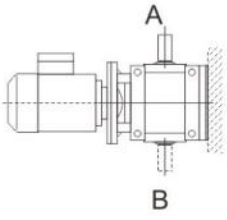

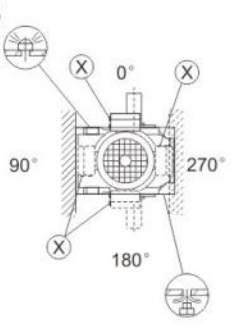

JRTS49~JRTS99

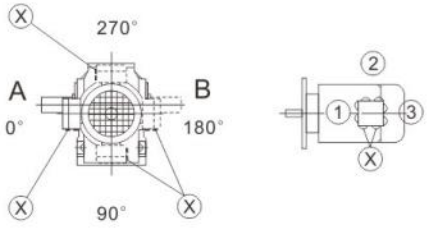

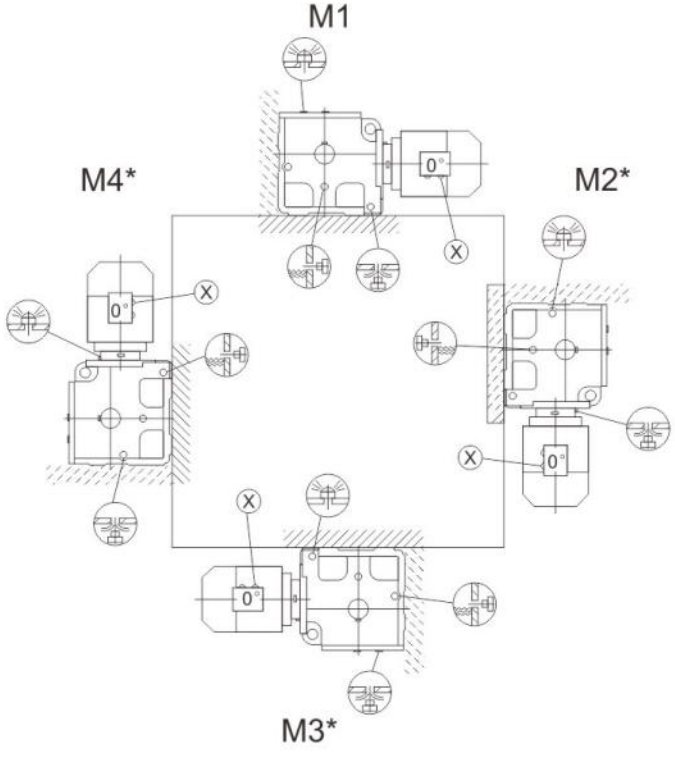

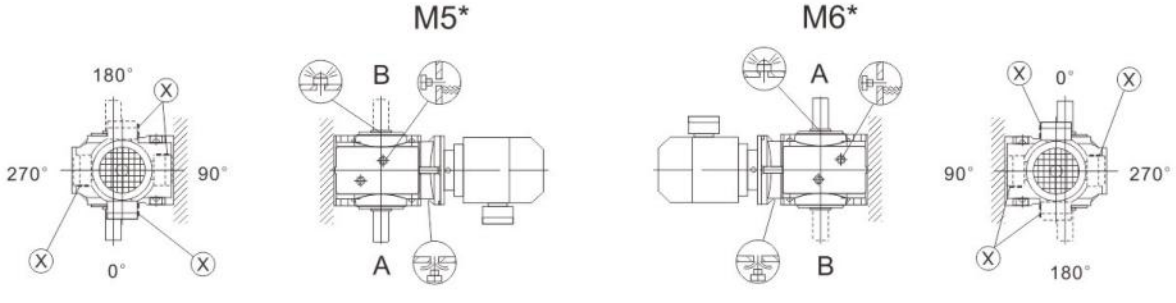

JRTSF/SAF/SHF39

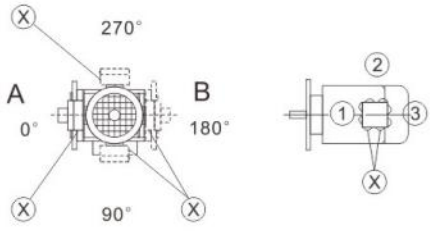

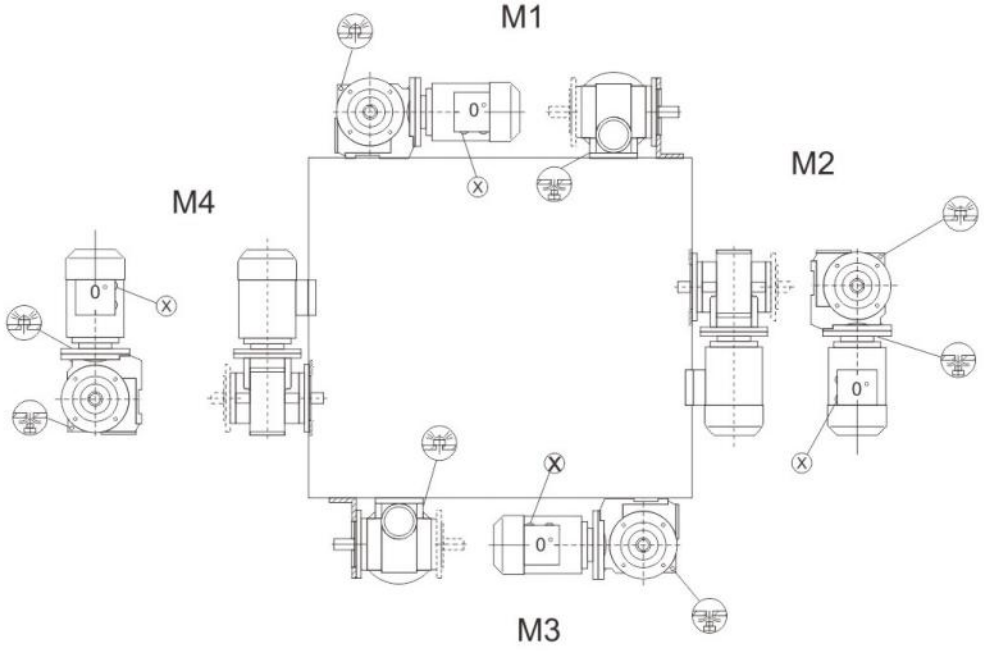

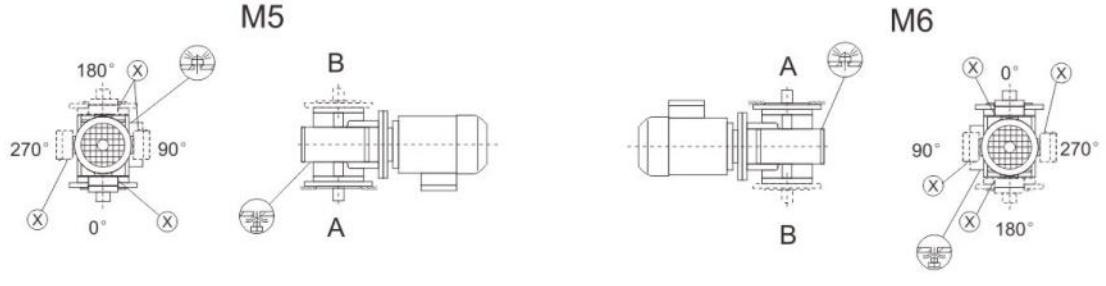

JRTSF/SAF/SHF/SAZ/SHZ49..-99..

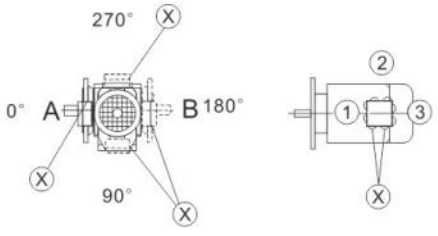

M1

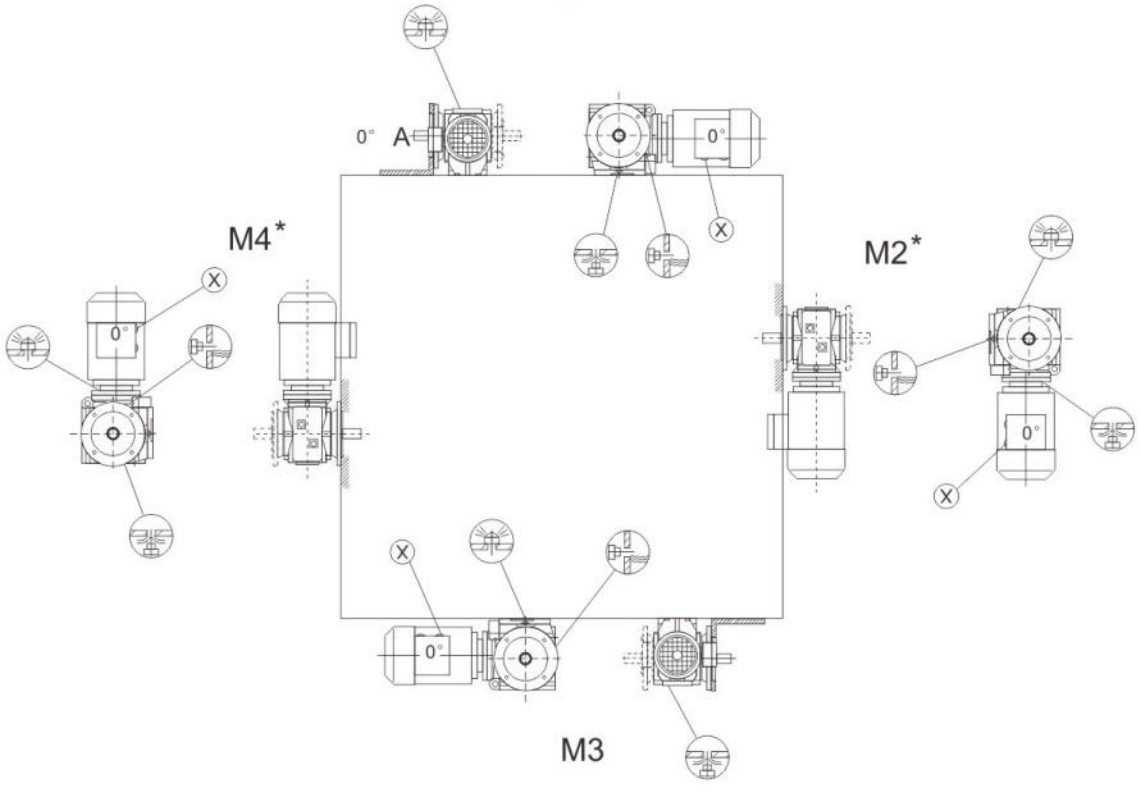

M3

M5*

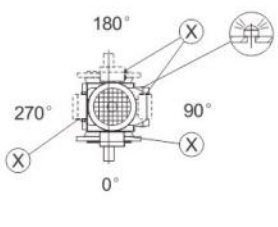

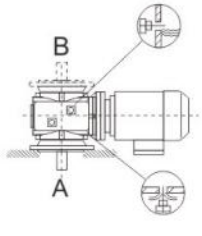

M6*

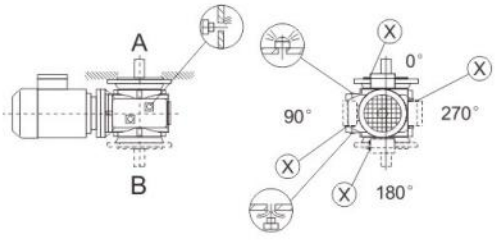

JRTSA/SH39

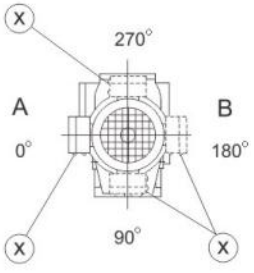

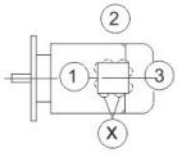

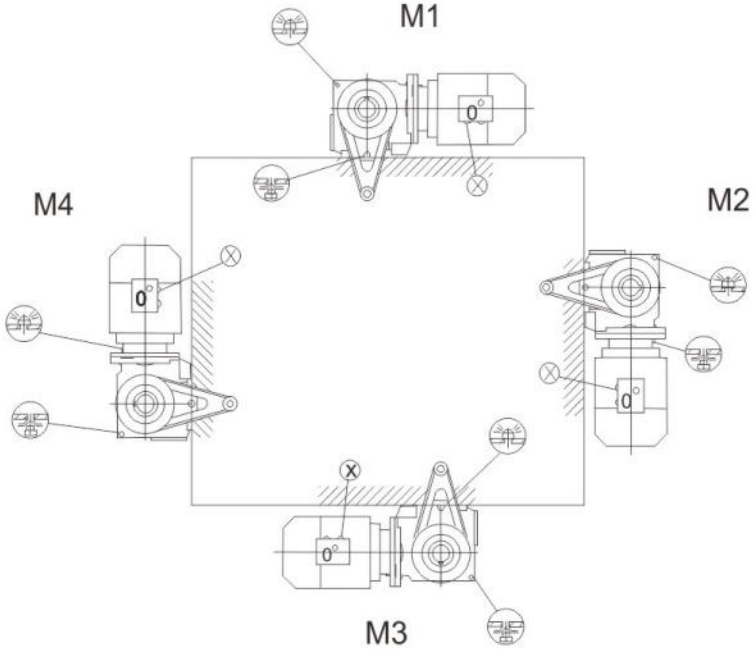

M5

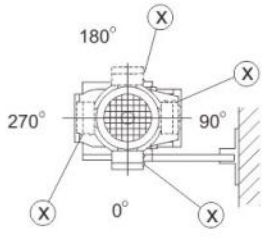

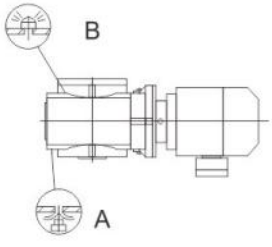

M6

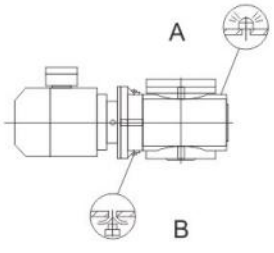

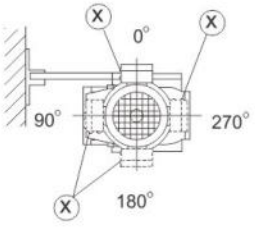

JRTSA/SH49..-99..

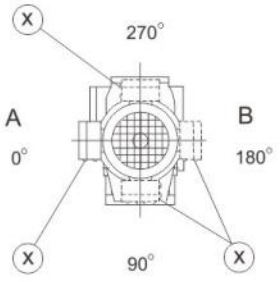

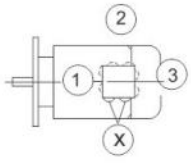

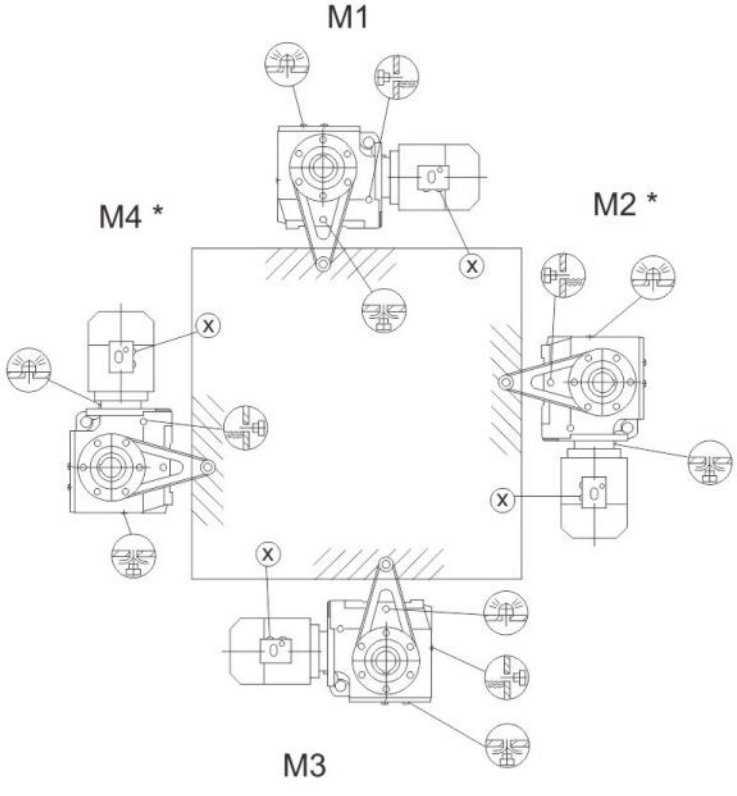

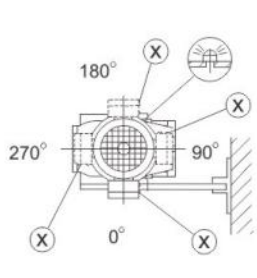

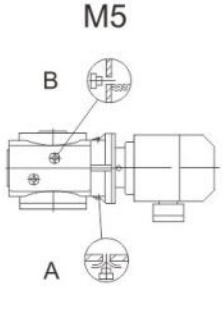

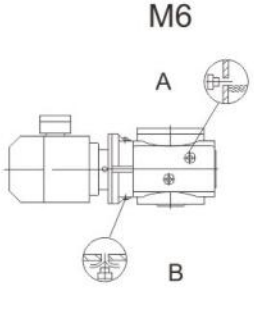

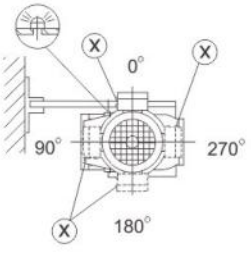

Schematic diagram of the installation location

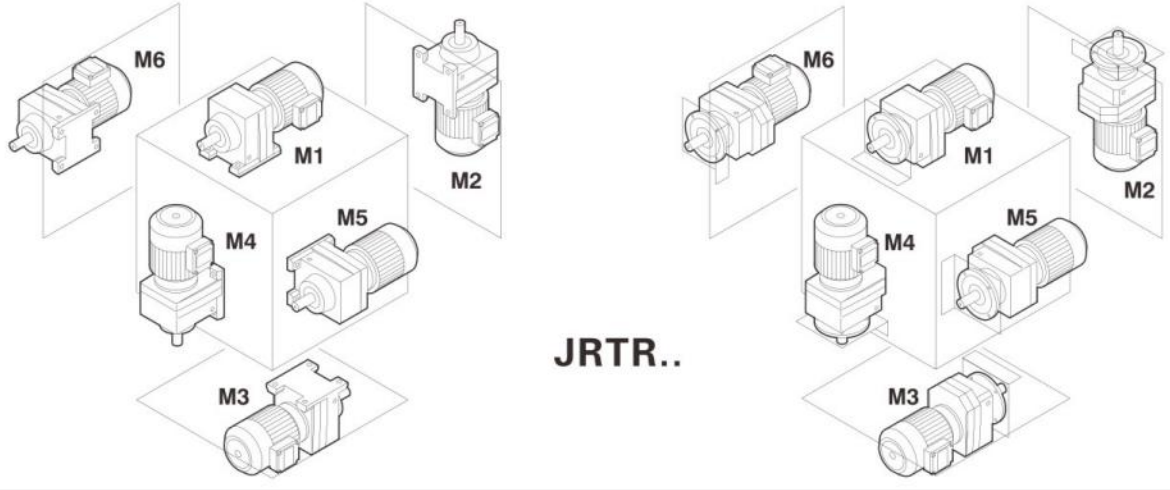

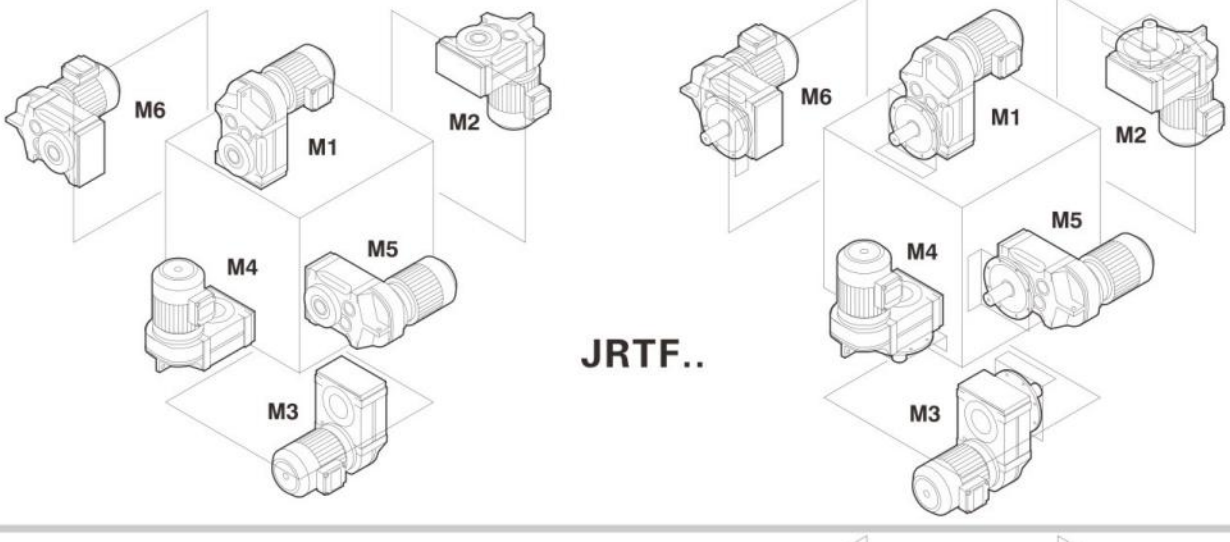

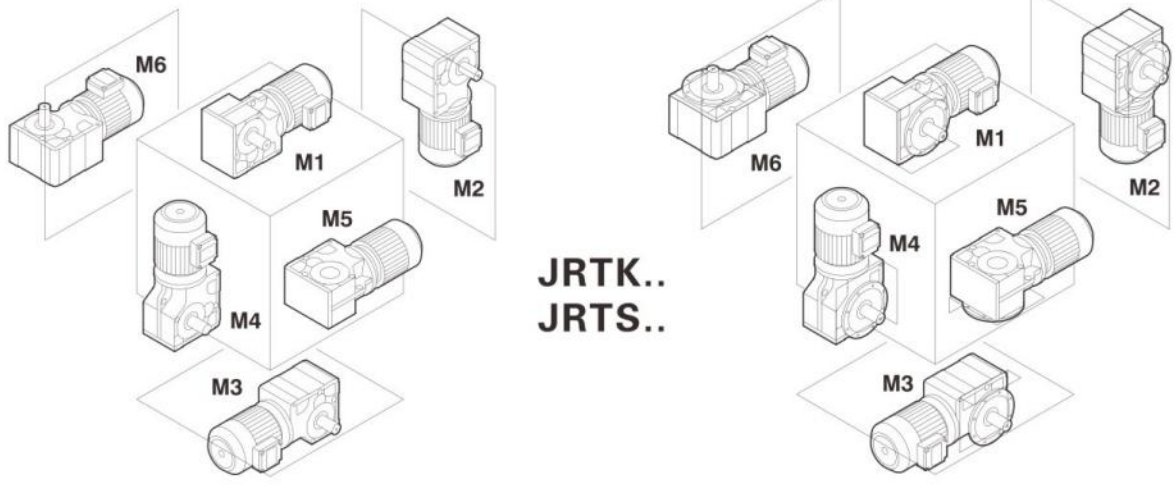

12. Dimensions and Tolerances Precaution

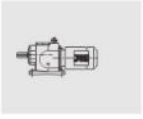
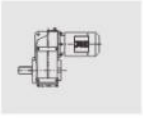
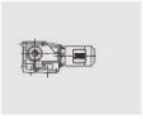


Shaft heights tolerances

h ≤250mm →-0.5mm
h >250mm →-1mm

Foot-mounted gear units:The motor may project below the mounting surface when fitted,please check

Shaft tolerance

Diameter tolerance
ϕ ≤50mm →ISOk6
ϕ >50mm →ISOm6

Centering Bores

INCH		METRIC	
ϕ0.625-0.750	→1/4-20x0.63	ϕ=7-10mm	→M3
ϕ1.000	→3/8-16x0.87	ϕ>10-13mm	→M4
ϕ1.250-1.375	→1/2-13x1.12	ϕ>13-16mm	→M5
ϕ1.625-1.750	→5/8-11x1.38	ϕ16-21mm	→M6
ϕ2.000-2.875	→3/4-10x1.61	ϕ21-24mm	→M8
ϕ3.625-4.750	→1-8x2.13	ϕ24-30mm	→M10
ϕ6.250-7.500	→1-1/8-7x2.13	ϕ30-37mm	→M12
		ϕ38-50mm	→M16
		ϕ50-85mm	→M20
		ϕ85-130mm	→M24
		ϕ130mm	→M30

Centering bores:according to DIN 332, shape D [in],shape DR [mm]

Hollow shaft

Diameter tolerance:

ϕ→ANSI H7	
ϕ0.625	→+0.0007 / -0
ϕ0.750-1.000	→+0.0008 /0
ϕ1.250-1.9375	→+0.0010 /-0
ϕ2.000-2.9375	→+0.0012/-0
ϕ3.250-4.500	→+0.0014/-0

ϕ→ISO H7 measured with plug gauge

Keys:according to DN 6885 (domed type); keyway width to ISO JS9

Mulitiple-spine shafts

Dm = Measuring roller diameter
Me = Inspection size









Flanges

Centering shoulder tolerance

ϕ ≤230mm(flange size A 120-A300) →ISOj6
ϕ >230mm(flange size A 350-A660) →ISOh6

Up to three different flange dimensions are available for each size of helical gear units AC (brake) motor and explosion-proof AC (brake) motor.The possible flanges per size are indicated in the relevant dimension sheets

lifting eyebolts,suspension eye lugs

R19...R29 helical gear units,motors up to DV100 and Spiroplan geared motors are deliv -ered without special transport fixtures.Otherwise,the gear units and motors are equipped with cast-on suspension eye lugs,screw-on suspension eye lugs or screw-on lifting eyebolts.

Gear unit/motor type	Screw-on lifting eyebolts /suspension eye lugs	Cast-on suspension eye lugs
JRTR/JRTRF39-59,JRTRX/JRTRXF59-69	●	—
≥JRTR69	●	—
JRTF39-159	—	●
JRTK39-159	●	—
JRTK169-189	●	—
JRTS39-49	●	—
JRTS59-59	—	—
≥D112	●	●

Breather valves

The gear unit dimension drawings are always shown with screw plugs.The corresponding sc -rew plug is replaced by an breather valve at the factory depending on which mounti-ng position M1-M6 is ordered.This means the contour dimensions may be slightly different.

Shrink disk connection

Hollow shaft gear unit with shrink disk connection:If required,please request a detailed data sheet on shrink disks from JIE,data sheet no.33 753..95.

Splined hollow shaft

Hollow shaft gear units FV.. in sizes 39-109 and KV.. in sizes 39-109 are supplied with a splined hollow shaft to ISO4762.

Rubber buffer for JRTFA/JRTFH/JRTFV

q stands for the compressed dimension of Rubber buffer in the Mamax torque.

Motor accessory

The motor dimensions may different as a result of motor accessory. Please refer to the dimension drawings of the motor accessory.

















JIE INTELLIGENT DRIVE SOLUTIONS CATALOGUE

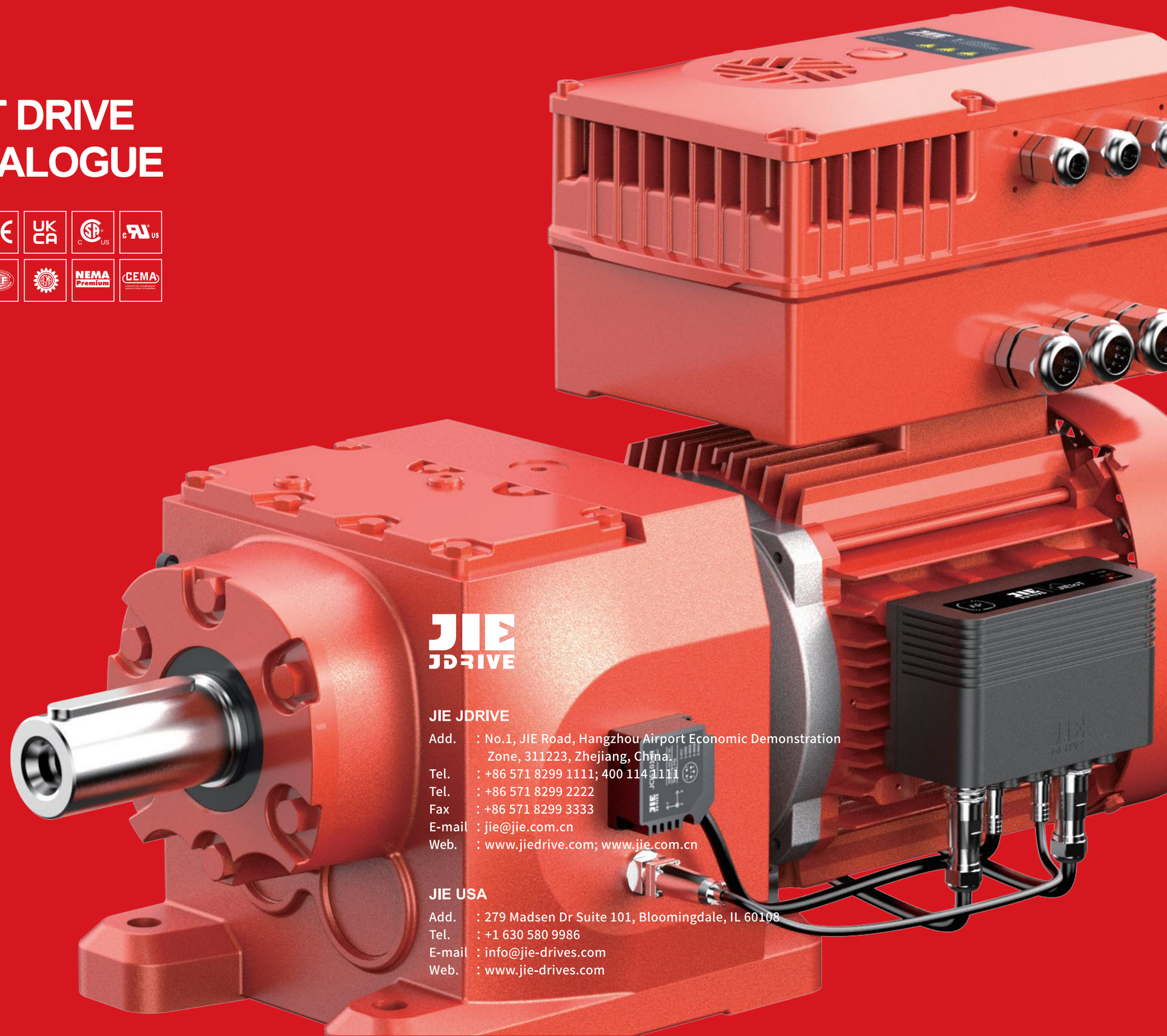

JIE JDRIVE

JIE JDRIVE

Add. : No.1, JIE Road, Hangzhou Airport Economic Demonstration Zone, 311223, Zhejiang, China.
Tel. : +86 571 8299 1111; 400 114 1111
Tel. : +86 571 8299 2222
Fax : +86 571 8299 3333
E-mail : jie@jie.com.cn
Web. : www.jiedrive.com; www.jie.com.cn

JIE USA

Add. : 279 Madsen Dr Suite 101, Bloomingdale, IL 60108
Tel. : +1 630 580 9986
E-mail : info@jie-drives.com
Web. : www.jie-drives.com

JRT GEAR UNITS & GEARMOTORS



JRTR
Helical Inline Gearmotors
Size: 09-189
Ratio: 3.37-289.74
Input power: 0.16-340HP
Output torque: 21-499633 lb-in



JRTF
Parallel Shaft Helical Gearmotors
Size: 29-169
Ratio: 3.77-281.71
Input power: 0.16-340HP
Output torque: 31-328333 lb-in



JRTK
Helical-Bevel Gearmotors
Size: 39-189
Ratio: 3.98-197.37
Input power: 0.16-272HP
Output torque: 88-555403 lb-in



JRTS
Helical-Worm Gearmotors
Size: 39-99
Ratio: 3.97-288
Input power: 0.16-30HP
Output torque: 88-43336 lb-in



JRTW
Helical Face Gearmotor
Size: 10-30
Ratio: 6.57-75
Input power: 0.12-1.5HP
Output torque: 221-619 lb-in

JRH INDUSTRIAL GEAR UNITS



JRHH
Parallel Shaft Gear Units
Size: 3-28
Ratio: 1.25-450
Input power: 5.85-14306HP
Output torque: 20341-12381600 lb-in



JRHB
Helical Bevel Gear Units
Size: 4-28
Ratio: 5-400
Input power: 3.81-6677HP
Output torque: 48642-12381600 lb-in



JRHD
Bucket Elevator Gear Units
Size: 5-16
Ratio: 25-71
Input power: 21.8-1775HP
Output torque: 97284-1530012 lb-in



JRHO
Palm Oil Gear Units
Size: 310
Ratio: 56, 80
Input power: 144, 191HP
Output torque: 663300 lb-in



JRHA
Cooling Tower Gear Units
Size: 166
Ratio: 14
Input power: 310HP
Output torque: 185724 lb-in

JRP PLANETARY GEAR UNITS



JRP
Planetary Gear Units
Size: 9-36
Ratio: 25-4000
Input power: 0.54-17597HP
Output torque: 194568-229994400 lb-in



JRP
Planetary Gear Units
Size: 01-8
Ratio: 3.08-3460
Input power: 0.03-261HP
Output torque: 8844-114972 lb-in



JRPH
Rotary Planetary Gear Units
Size: 08-100
Ratio: 3.4-2000
Input power: 102-340HP
Output torque: 70752-884400 lb-in



JRP RV
Inline Planetary Gear Units
Ratio: 3-100
Backlash: 1-3/3-5/5-7arc-min
Torque: 53-29185 lb-in



JRP RE
Right Angle Planetary Gear Units
Ratio: 3-100
Backlash: 4-9/6-11arc-min
Torque: 106-16980 lb-in

JRW WORM GEAR UNITS



JRSTD
IEC Worm Gear Units
Size: 25-150
Ratio: 5-100
Input power: 0.08-20HP
Output torque: 115-13716 lb-in



JRWND
NEMA Worm Gear Units
Size: 30-150
Ratio: 5-100
Input power: 0.08-20HP
Output torque: 115-13716 lb-in



JRWNED
Double Reduction Units
Size: 25/30-63/150
Ratio: 100-5000
Input power: 0.08-2HP
Output torque: 257-23628 lb-in



JRKM, JRKB
Hypoid Gear Units
Size: 28-68
Ratio: 7.5-300
Input power: 0.1-15HP
Output torque: 708-6637 lb-in



WPA
Worm Gears
Size: 40-250
Ratio: 10-60
Input power: 0.16-45HP
Output torque: 168-24292 lb-in

JD THREE PHASE ASYNCHRONOUS MOTORS



JDC, JCS Servo Motors & Drives
Power: 0.54-10HP
Output Torque: 11-425 lb-in
Input power: 1AC 220V/3AC 380V
Communication:
Pulse, EtherCAT, Profinet



JDL
Asynchronous Servo Motor
Torque:: 22-1770N.m
Speed: 1200r/min-3000r/min



JD-IEC
IEC Standard Motors
Size: 63-315
Power: 0.16-272HP
Efficiency: IE3 IE4 IE5



JD-NEMA
NEMA Standard Motors
Size: 56C-365TC
Power: 0.16-30HP
Efficiency: NEMA Premium



JD-B
Explosion-Proof Motors
Size: 80-315
Power: 0.75-272HP
Explosion-Proof Grade:
Exib II BT4
Efficiency: IE3 IE4 IE5

JC INTELLIGENT DRIVE SOLUTIONS



JC
Intelligent Drive Solutions
Industrial Drive Solutions incl Reducers, Motors, Converters, Sensors, Internet of Things, etc.



JCMC VFD Gearmotors
Size: 175-255
Power: 1-7HP
Input Power: 3AC 380-440V
Output Frequency: 0-200Hz
Communication:
ModbusRTU, Profinet, ASi



JCI Intelligent Monitoring System
Power: AC220V, DC24V
Communication: Wifi, 4G, RS485
Items:
Vibration, Temperature, Pressure, Current
Deployment:
Public Cloud, Private Cloud



JCME Distributed VFDS
Size: 175-255
Power: 1-7HP
Input power: 3*AC380-440V
Output Frequency: 0-200Hz
Communication:
Profinet, ModbusRTU, ASi



JCF VFDS
Size: 175-355
Power: 1-74HP
Input power:
1*AC220/3*AC400V
Communication:
Profinet, EtherCAT, CANOPEN

MORE OPTIONS



JRES(R、K)
Stainless Steel Helical Gearmotos
Size: 37-67
Ratio: 3.41-199.81
Input power: 0.24-10HP
Output torque: 106-8048 lb-in



JRES
Stainless Steel Worm Gearmotors
Size: 30-90
Ratio: 7.5-100
Input power: 0.08-5.4HP
Output torque: 23-4053 lb-in



JRTH、JRTV
Front&Rear Roller Gearboxes
Size: 18-60
Ratio: 3-1800
Input power: 0.13-10HP
Output torque: 14-29136 lb-in



JRSS
Screw Lifters
Size: 35-150
Ratio: 5-40
Input power: 0.26-22HP
Lift Capacity: 1102-57431 lb-in



JRTM
Spiral Bevel Right Angle Units
Size: 2-25
Ratio: 1-5
Input power: 0.019-455HP
Input Speed: 10-1450r/min



JRGC
Transfer Case
Size: 0401, 1501
Ratio: 0.589, 0.659, 0.756, 0.825
Max. Output Torque(Pump): 12303 lb-in
Max. Output Torque(Working Shift)
353760 lb-in



JN
Agricultural Machinery Gear Units
Ratio: 0.364-2.33
Input Speed: 800r/min
Efficiency: ≥96%



JPF
Front&Rear Roller Gearboxes
Size: 1706-2012
Ratio: 3.04-33.568
Input power: 2-4HP
Output torque: 974-2407 lb-in



JEC
Escalator Units
Size: 2-15, 2-25
Ratio: 24.5
Efficiency: ≥96%
Working Life: 146000h
Output torque: 31219-45547 lb-in

JIE Intelligent Drive Solutions Provider
For more products, please contact JIE.
(Inch)

JIE Drive Intelligent Factory

"12345" Plan of JIE Drive Intelligent Factory: 1 Scene, i.e. JIE Intelligent Drive Solutions; 2 Platforms, i.e. Offline JIE Intelligent Drive Industrial Platform and Online JIE New Manufacturing Platform; 3 Functions, i.e. Office Area, Production Area and Living Area; 4 Standards, i.e. Chinese Standard, American Standard, German Standard and Japanese Standard; 5 Intelligences, i.e. Intelligent Plants, Intelligent Products, Intelligent Services, Intelligent Experiences and Intelligent Talents.We are dedicated to building a professional, Intelligent and Global JIE on the basis of environment-friendly, sustainable development, and global service.

JIE Intelligent Factory Office Area


Building A Business Center


Building B Innovation Center


Building C Operation Center

JIE Intelligent Factory Production Area


JIE Drive Intelligent Factory


Operations Command Center


Nationally Recognized Laboratory

JIE Intelligent Factory Living Area


JIE Common Area

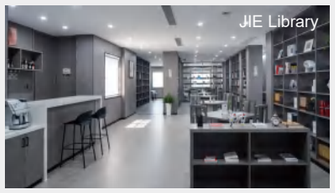
JIE Library


JIE Fitness Center

JIE Intelligent Drive Situational Application

Drive solutions include Intelligent Central Stereoscopic Warehouse, Intelligent Plant of Housings, Intelligent Plant of Gears, Intelligent Plant of Motors, Intelligent Plant of Assembly and Intelligent Testing.


JIE Intelligent Drive Solutions for Stackers


JIE Intelligent Drive Solutions for RGVs


JIE Intelligent Drive Solutions for Conveyor Systems


JIE Intelligent Drive Solutions for Elevators


JIE Intelligent Drive Solutions for Cranes


JIE Intelligent Drive Solutions for Industrial Ceiling Fans


JIE Intelligent Drive Solutions for Housings Cleaning Lines


JIE Intelligent Drive Solutions for Heat Treatment Lines


JIE Intelligent Drive Solutions for Motors Winding & Embedding


JIE Intelligent Drive Solutions for Product Assembly Lines

JIE Intelligent Drive Top 10 Industry Case Applications

JIE provides Intelligent Drive Solutions and Digital Technologies to the top 10 enterprises in manufacturing, clothing, food, housing, automotive, energy, transportation, agriculture, Petrochemical, and maritime industries.


JIE Intelligent Drive Solutions for Logistics Equipment Industry


JIE Intelligent Drive Solutions for Textile Machinery Industry


JIE Intelligent Drive Solutions for Food and Beverage Industry


JIE Intelligent Drive Solutions for Construction Machinery Industry


JIE Intelligent Drive solutions for Automotive Engineering Industry


JIE Intelligent Drive Solutions for Power and Energy Industry


JIE Intelligent Drive Solutions for Lifting and Transportation Industry


JIE Intelligent Drive Solutions for Agricultural and Animal Husbandry Machinery Industry


JIE Intelligent Drive Solutions for Petrochemical Industry


JIE Intelligent Drive Solutions for Marine Industry

JIE Intelligent Drive Industrial Platform

Using intelligent products, to build intelligent plants and produce intelligent products, serving customers with intelligent products, intelligent services and intelligent experiences. To build an industrial platform and achieve win-win cooperation.



JIE Intelligent Drive Ecosystem

From supply chain management, Innovation chain integration, industrial chain development, value chain synergy to ecological chain construction, JIE focuses on Supply-chain enhancement & complement to achieve win-win cooperation through Three Hundred-Thousand-Ten Thousand Project, namely Cultivating Excellent Employees, Integrating Excellent Suppliers and Serving Excellent Customers.

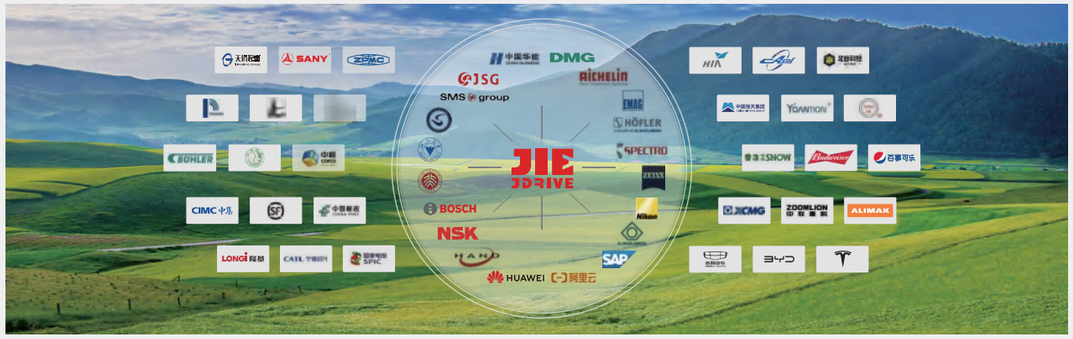

JIE Intelligent Dirve Digital Products

JIE Intelligent Drive “131” Digital Product System: 1 Solution - JIE Intelligent Drive Solution; 3 Platforms - JIE Intelligent Manufacturing Platform, JIE Big Data Platform and JIE Intellectualization Platform; 1 Scenario - JIE Intelligent Factory Scenario, incl.JRT Intelligent Gearmotors JRH Intelligent Industrial Gear Units JRP Intelligent Planetary Gear Units JRW High-efficiency Worm Reducers JD High-efficiency Motors JC Intelligent Drive Solutions. JIE is dedicated to serving our valued customers with great products and providing excellent services with a strong team.

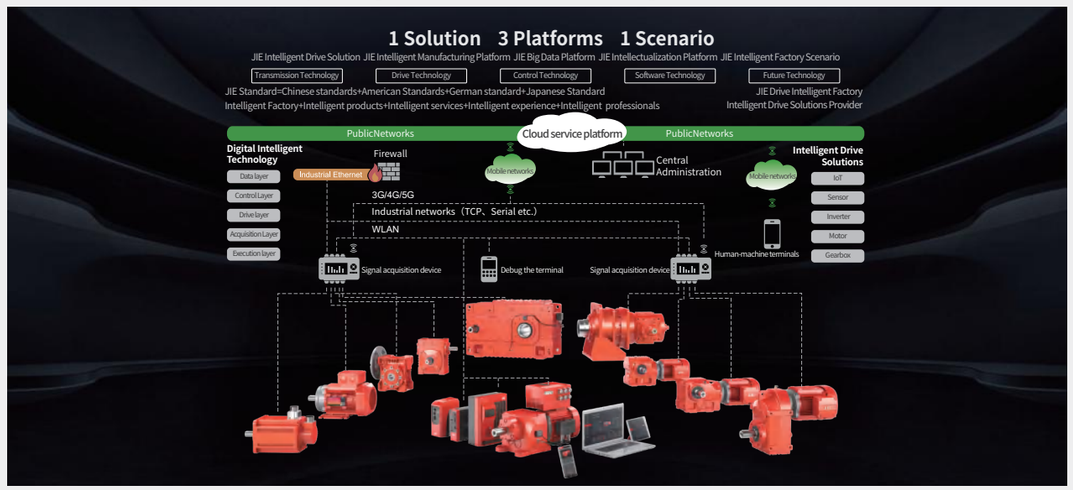

JIE Intelligent Drive Research Institute + Innovation Center + Intelligent Factory

JIE Intelligent Drive “Research Institute + Innovation Center + Intelligent Factory” 111 Innovative Development Model: Take the Research Institute as the lead to create talent hub, Take Science & Innovation Park as a platform to build industrial ecosystem. Based on business entities, positioning "Specialization, Refinement, Differentiation, Innovation".



China Manufacturing Center Global Assembly Factories

JIE based in China, serves the World, including Europe, JIE China, JIE USA, and JIE Europe provide localized service, face-to-face service, and one-on-one service in the global market.

