Installation / User Manual

The Concentrator controller

SUN-OPTMZ01-COMM4-20A

Ver:1.0.0

Table of Contents

About this Manual 01

Safety Instructions 01

Security Declaration

Labels description

SUN-OPTMZ01-COMM4-20A Concentrator Controller 03

- Part list
- Install the AC Connector Protective Sleeve
- Points for attention
- Installation and wiring requirements

Appendix 06

- Concentrator Controller specification sheet

Download APP 07

USER MANUAL for Deye Cloud APP 08

- Registration
- Create a Plant
- Add a Concentrator Controller
- Add a Optimizer
- Network Configuration

EU Declaration of Conformity 12

About This Manual

The manual mainly targets the Concentrator Controller independently developed and produced by Ningbo Deye Inverter Technology Co., Ltd.

➢ Purpose

The purpose of this manual is to provide readers with detailed information about the product and installation, operation, and maintenance instructions.

➢ Targeting readers

The manual is applicable to professional technicians and users who need to install, operate, and maintain external optimizers.

➢ Manual usage

Please read this manual carefully before using this product and store it properly in a location that is easy for operation and maintenance personnel to locate.

➢ Symbolism

The following are symbols that may be used in this manual. Please read them carefully to better use this manual.

Warning
"Warning" indicates a moderate potential danger if a situation that could result in death or serious injury is not avoided.

Caution
"Caution" indicates a low potential danger, and failure to avoid situations that may result in moderate or mild injury to personnel.

1. Safety Instructions

In order to ensure the safe installation and operation of the Concentrator controller, reduce the risk of electric shock, and minimize equipment damage, the following safety precautions need to be strictly followed during operation and maintenance.

Warning
(1) All installation operations must be completed by professional technicians only. Professional technicians must: **(2)After specialized training;** **(3)Have read this manual completely and mastered the safety precautions related to operation;** **(4)Familiar with the relevant safety regulations of electrical systems.**

Security Declaration

For detailed information regarding the product's network security vulnerability response procedures and the disclosure of related vulnerabilities, please refer to the Deye Security Center at https://sec.deyecloud.com.

Labels description

Label	Description
	Caution, risk of electric shock.
	Caution, risk of danger.
	Caution, hot surface.
	Equipment protected throughout by DOUBLE INSULATION or REINFORCED INSULATION.
	CE mark of conformity
	Please read the instructions carefully before use.
	Symbol for the marking of electrical and electronics devices according to Directive 2002/96/EC. Indicates that the device, accessories and the packaging must not be disposed as unsorted municipal waste and must be collected separately at the end of the usage. Please follow Local Ordinances or Regulations for disposal or contact an authorized representative of the manufacturer for information concerning the decommissioning of equipment.

2. SUN-OPTMZ01-COMM4-20A Concentrator Controller

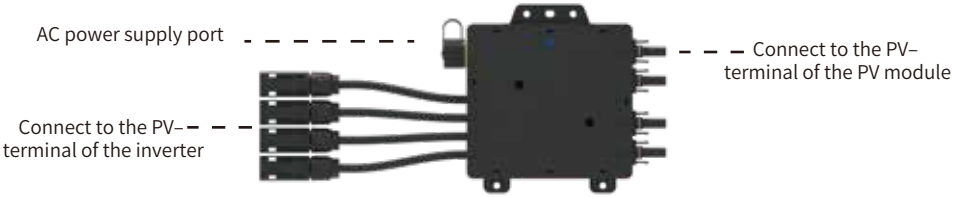

2.1 Part list

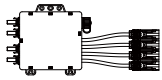

Concentrator Controller x1

HJA2 Core Wire Female Connectorx1

Point tail tapping screw x 1

Latch sleeve of AC connector x 1

2.2 Install the AC Connector Protective Sleeve

After connecting AC connector to grid port at the bottom of the machine, fix the protective sleeve to the joint position, and then fix it with screws.

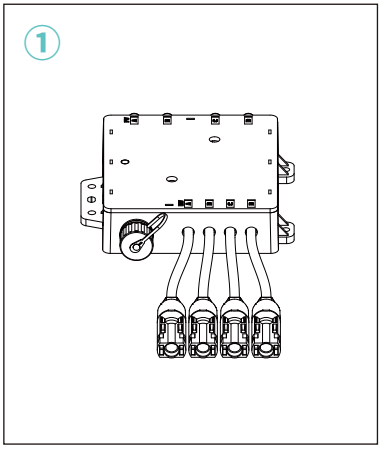

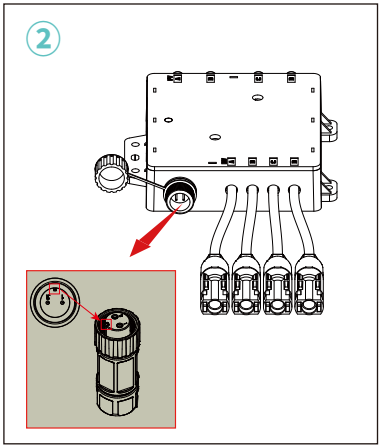

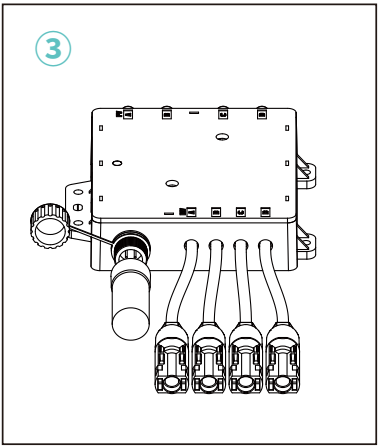
3

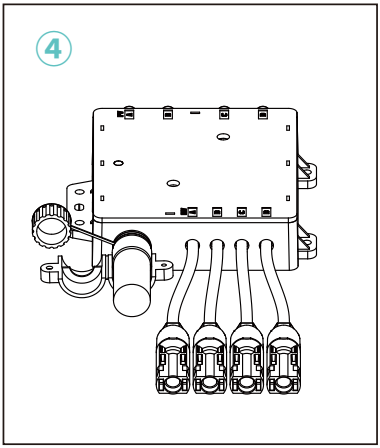
4

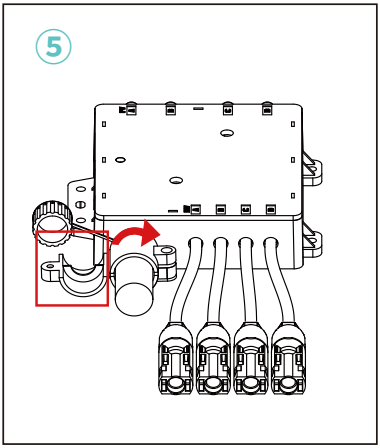
5

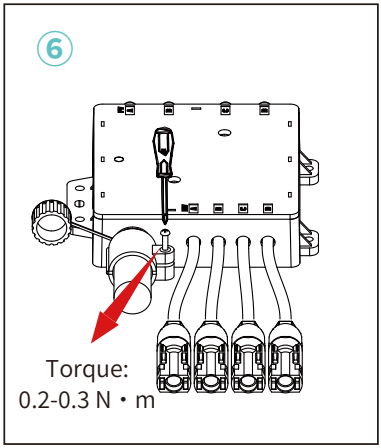
6
Torque:
0.2-0.3 N • m

2.3 Points for attention

➢ During the loading, unloading, and transportation of the product, please handle it with care and avoid being subjected to heavy external pressure to prevent damage;

If it is not for maintenance reasons, do not frequently open or unplug the connection system, as this will reduce the waterproof sealing and service life.

2.4 Installation and wiring requirements

2.4.1 Installation steps instructions

Warning

Before installation, please read all instructions and warnings in this manual, as well as the warning labels on the inverter and component array.

Warning

Before installation, please shut down the inverter and disconnect it from the component array.

2.4.2 Installation and wiring of Concentrator Controller

The Concentrator Controller supports up to 4 strings, and a single string can support up to 20 PV optimizers (depending on the capacity of the inverter). For example, if the on-site inverter supports two string inputs, the Concentrator Controlleronly needs two strings connected to the PV inputs of the string and the inverter. The communication distance between the Concentrator Controller and the strings should not exceed 200m.

1. Tear off the QR code and remove the QR code label at the indicated position as shown in Figure f, and paste it in the designated area of the physical layout template.

f. Schematic diagram of Concentrator Controller QR code tearing and pasting

2. Concentrator Controller fixed

The Concentrator Controller features a built-in Wi-Fi module and receives power from the AC grid. Installation should take into account both the Wi-Fi signal coverage and the AC power connection.

3. Optimizer Concentrator Connection

Connect the PV - in the connected string sequentially through the string end of the Concentrator Controller and then connect it to the inverter, as shown in Figure h.

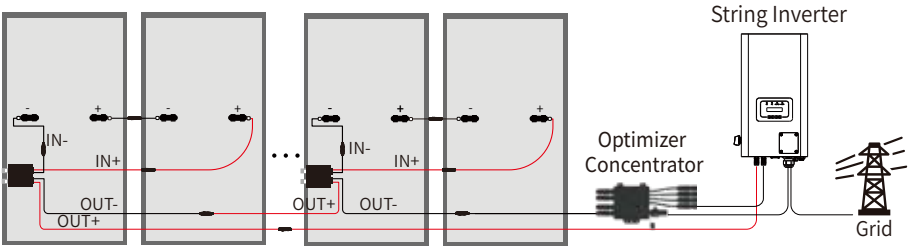

h. Use the Gird port of inverter to supply the concentertor

Note:

1. To minimize electromagnetic interference, it is recommended to shorten the length of the cables from the optimizer to the inverter and Concentrator Controller as much as possible.
2. To ensure the commuinication stable, it's recommended to dividually layout the PV cable and AC cable of this solar system, make sure the distance between them is more than 10cm.

3. Appendix

Concentrator Controller specification sheet

Model	SUN-OPTMZ01-COMM4-20A
Electrical Parameters	**Parameter**
Max. PV Input/Output Voltage(V)	1100V
Max. Operating Input/Output Current(A)	20A
AC Input Voltage Range(V)	94~238Va.c.(L/N)
Power Consumption	1.5W
Interface	
Communication Interface	Wi-Fi&BT, PLC
General Data	
Overvoltage Category	DCII/ACIII
Operating Temperature Range	-40 ~ + 60 °C
Permissible Ambient Humidity	0-100%
Ingress Protection(IP) Rating	IP68
Permissible Altitude	⩽4000
Cabinet Size（W*H*D）[mm]	150*142*34
Weight[kg]	1.1
Warranty	10 years
EMC Standard	EN61000-6-1,EN61000-6-2, EN61000-6-3,EN61000-6-4, EN 55011:2016/A2:2021, EN62920:2017/A1:2021
Safety Standard	IEC62109-1(class II safety)

4. Download APP

If you are an household user, please scan QR code below to download Deye Cloud APP. Or you can log in to https://deyecloud.com/

If configuration failure occurs,please check the following reason and try it again.

1) Make sure WLAN is ON.
2) Make sure WiFi is normal.
3) Make sure wireless router does not implement the white-black list.
4) Remove the special characters in Wi-Fi network.
5) Shorten the distance between the phone and device.
6) Try to connect to other Wi-Fi.
7) Use the web page to configure the network

5. User Manual For Deye Cloud APP

Please make sure Bluetooth and WiFi are ON and the router can connect to the network normally.

5.1 Registration

Go to Deye Cloud App and register.
Click "Register"and create your account here.

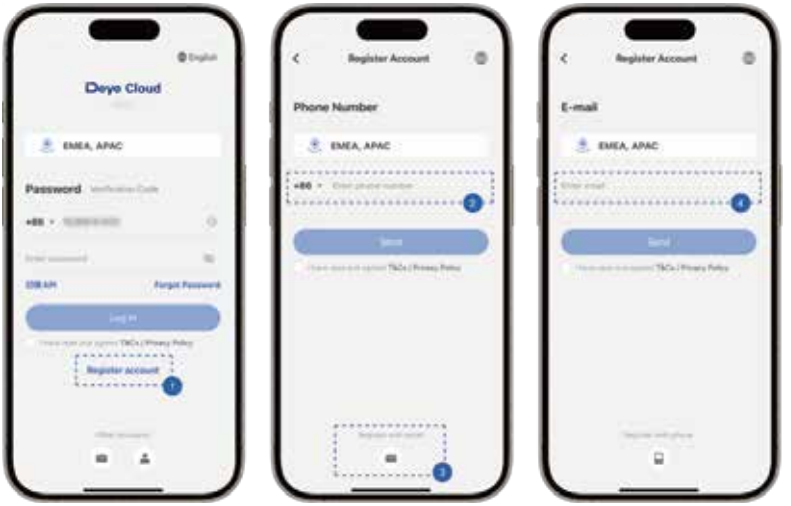

5.2 Create a Plant

Click "Create a Plant" to create your plant.
Please fill in plant basic info and other info here.

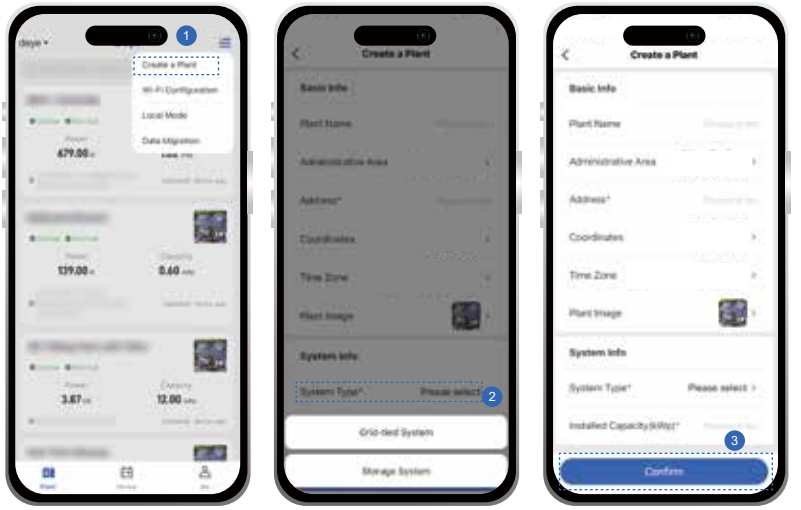

5.3 Add a Concentrator Controller

Step 1: Choose a Plant.
Step 2: Goto"Device"page and click on"Add a Logger".
Step 3: Scan QR code of the Concentrator Controller, which can be found on the Concentrator Controller body.Or enter the optimizer concentrator SN manually.
Step 4: Click on "Quick Settings" and select the Transmission Frequency. When there are multiple Concentrator Controllers in a plant or an area, different transmission frequencies need to be set for them to prevent mutual interference.

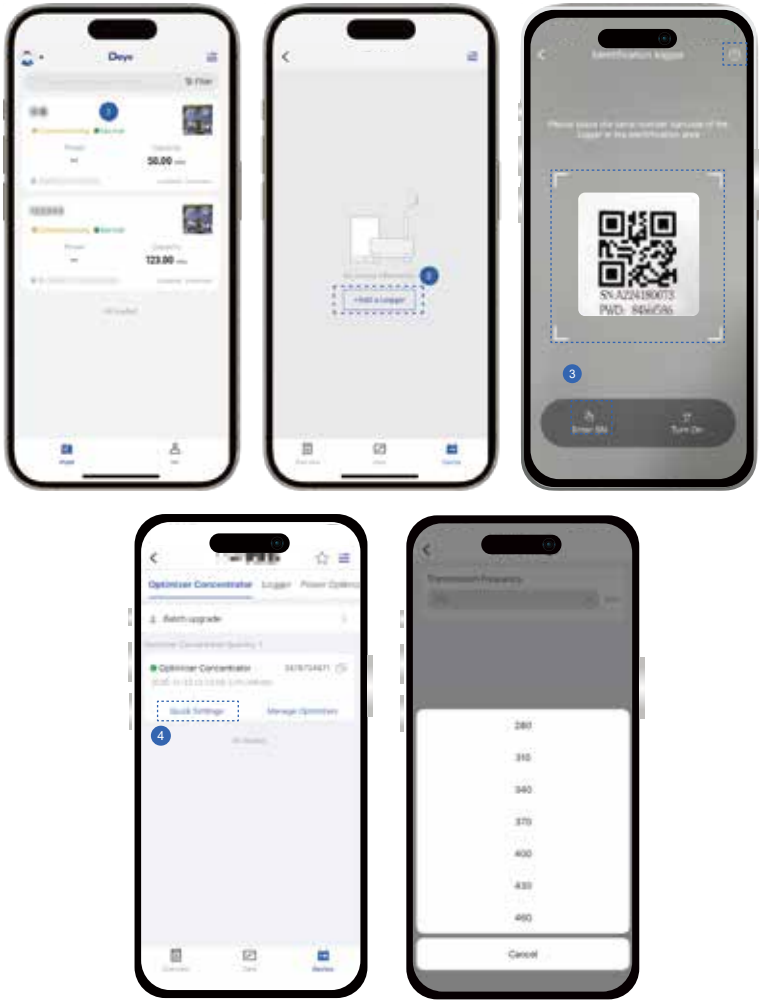

Note:
In a plant, the number of Concentrator Controllers should preferably not exceed 6. Two concentrators that are close to each other need to be set to different transmission frequencies, otherwise, communication interference problems will occur. If the number of Concentrator Controllers exceeds 6, two that are far apart can be set to the same transmission frequency.

5.4 Add a Optimizer

Step 1: Go to "Manage Optimizers".
Step 2: Select the corresponding string based on the wiring of the Concentrator Controller.
Step 3: Choose "+"，and scan QR code of the optimizer，which can be found on the optimizer, or enter the SN manually.
Step 4: Choose the "Bind".

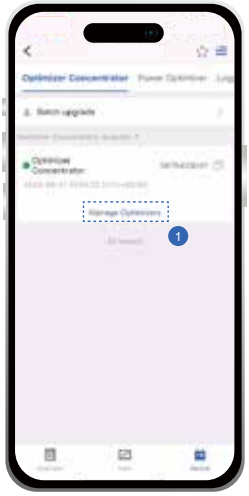

5.5 Network Configuration

Step 1: Click"Wi-fi Configuration"to set the network.(Please make sure Bluetooth and WiFi are ON.)
Step 2: Please wait for a few seconds,then select corresponding SN.
Step 3: Please connect 2.4G wifi.
Step 4: Complete WiFi configuration.

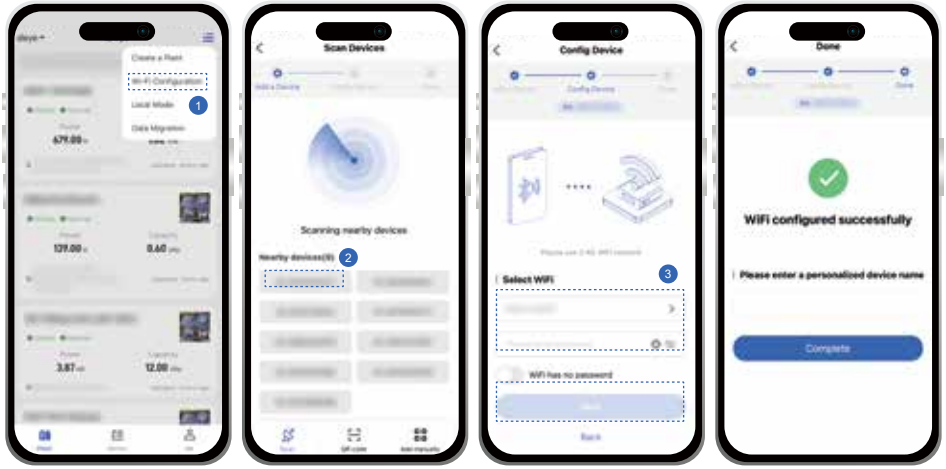

Caution

5G WIFI is not supported.

Caution

Please make sure the product is working properly before you leave the site. If there is anything abnormal, please do not leave the site and contact customer service at the first time. Service Email:service@deye.com.cn.

Note:
Specification of wireless module:
Wi-Fi Frequency range: 2.412GHz-2.472GHz
Bluetooth Frequency range: 2.400GHz-2.483GHz
Module maximum transmitting power: Wi-Fi＜20dBm, BT＜10dBm
Antenna:PCB Antenna
AntennaGain: 2.61dBi

6. EU Declaration of Conformity

within the scope of the EU directives

- Radio Equipment Directive 2014/53/EU (RED)
- Restriction of the use of certain hazardous substances 2011/65/EU)(RoHS)

NINGBO DEYE INVERTER TECHNOLOGY CO.,LTD. confirms herewith that the products described in this document are in compliance with the fundamental requirements and other relevant provisions of the above mentioned directives. The entire EU Declaration of Conformity and certificate can be found at https://www.deyeinverter.com/download/#pv-optimizer. Please scan the QR code below to access the EU Declaration of Conformity and the relevant certificates.

NINGBO DEYE INVERTER TECHNOLOGY CO., LTD.
Add.: No.26 South YongJiang Road, Daqi, Beilun, NingBo, China.
Tel.: +86 (0) 574 8622 8957
Fax.: +86 (0) 574 8622 8852
E-mail: service@deye.com.cn
Web.: www.deyeinverter.com